SERVICE MANUAL

STEREO RECEIVER

SANSUI R-30/50/70

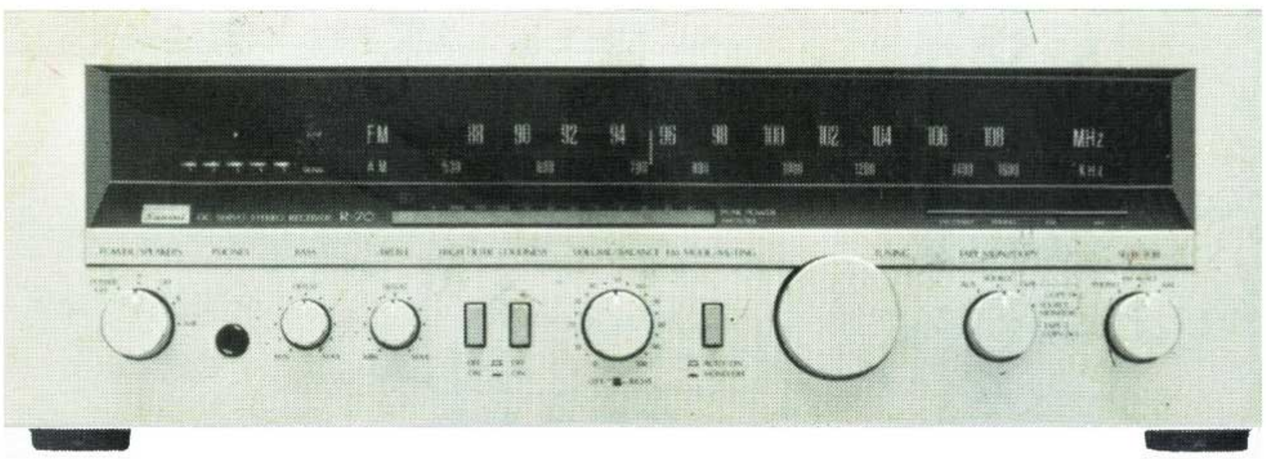

Sansui

SANSUI ELECTRIC CO., LTD.

SPECIFICATIONS

Audio section

Power output <R-30>
Min. RMS, both channels driven, from 40 to 20,000 Hz, with no more than 0.09 % total harmonic distortion.
25 watts per channel into 8 ohms

Power output <R-50>
Min. RMS, both channels driven, from 30 to 20,000 Hz, with no more than 0.09 % total harmonic distortion.
45 watts per channel into 8 ohms

Power output <R-70>
Min. RMS, both channels driven, from 20 to 20,000 Hz, with no more than 0.08 % total harmonic distortion.
65 watts per channel into 8 ohms

Total harmonic distortion <R-30/50>
. . . . . less than 0.09 % at or below rated min. RMS power output

Total harmonic distortion <R-70>
. . . . . less than 0.08 % at or below rated min. RMS power output

Frequency response (at 1 watt)
. . . . . 10 to 50,000 Hz, +1 dB, −3 dB

Input sensitivity and impedance (at 1 kHz) <R-30>
PHONO . . . . . 2.5 mV/47 kilohms
TAPE PLAY . . . . 150 mV/47 kilohms

Input sensitivity and impedance (at 1 kHz) <R-50/70>
PHONO . . . . . 2.5 mV/47 kilohms
AUX, TAPE PLAY . 150 mV/47 kilohms

Output level (at 1 kHz)
TAPE REC . . . . . 150 mV

Hum and noise (short-circuit, A-network)
PHONO . . . . . 73 dB

FM section

Tuning range . . . . . 88 to 108 MHz

Usable sensitivity
Mono IHF . . . . . 12 dBf (2.2 μV)
DIN . . . . . 1.1 μV
Stereo IHF . . . . . 22 dBf

50 dB quieting sensitivity
Stereo . . . . . 38 dBf

Signal to noise ratio (at 65 dBf)
Mono . . . . . 72 dB
Stereo . . . . . 67 dB

Distortion (at 65 dBf)
Mono . . . . . less than 0.5 % at 1,000 Hz
Stereo . . . . . less than 0.8 % at 1,000 Hz

Stereo separation . . . . 35 dB at 1,000 Hz

Antenna input impedance
. . . . . 300 ohms balanced
75 ohms unbalanced

AM section

Tuning range . . . . . 530 to 1,600 kHz

Usable sensitivity (bar antenna)
. . . . . 50 dB/m (300 μV/m)

Signal to noise ratio . . 46 dB

Others

Power voltage . . . . . 110 ~ 120, 220 ~ 240 V (50/60 Hz)
For U.S.A. and Canada
. . . . . 120 V (60 Hz)

Power consumption <R-30>
. . . . . 100 watts 120 VA Rated

Power consumption <R-50>
. . . . . 160 watts 190 VA Rated

Power consumption <R-70>
. . . . . 230 watts 280 VA Rated

Dimensions . . . . . 430 mm (16-15/16") W
147 mm (5-13/16") H
252 mm (9-15/16") D

Weight <R-30> . . . . . 5.6 kg (12.3 lbs.) net
6.5 kg (14.3 lbs.) packed

Weight <R-50> . . . . . 6.7 kg (14.8 lbs.) net
7.6 kg (16.8 lbs.) packed

Weight <R-70> . . . . . 7.5 kg (16.5 lbs.) net
8.4 kg (18.5 lbs.) packed

* Design and specifications subject to changes without notice for improvements.

www.hifiengine.com

1. BLOCK DIAGRAM

• Tuner Section

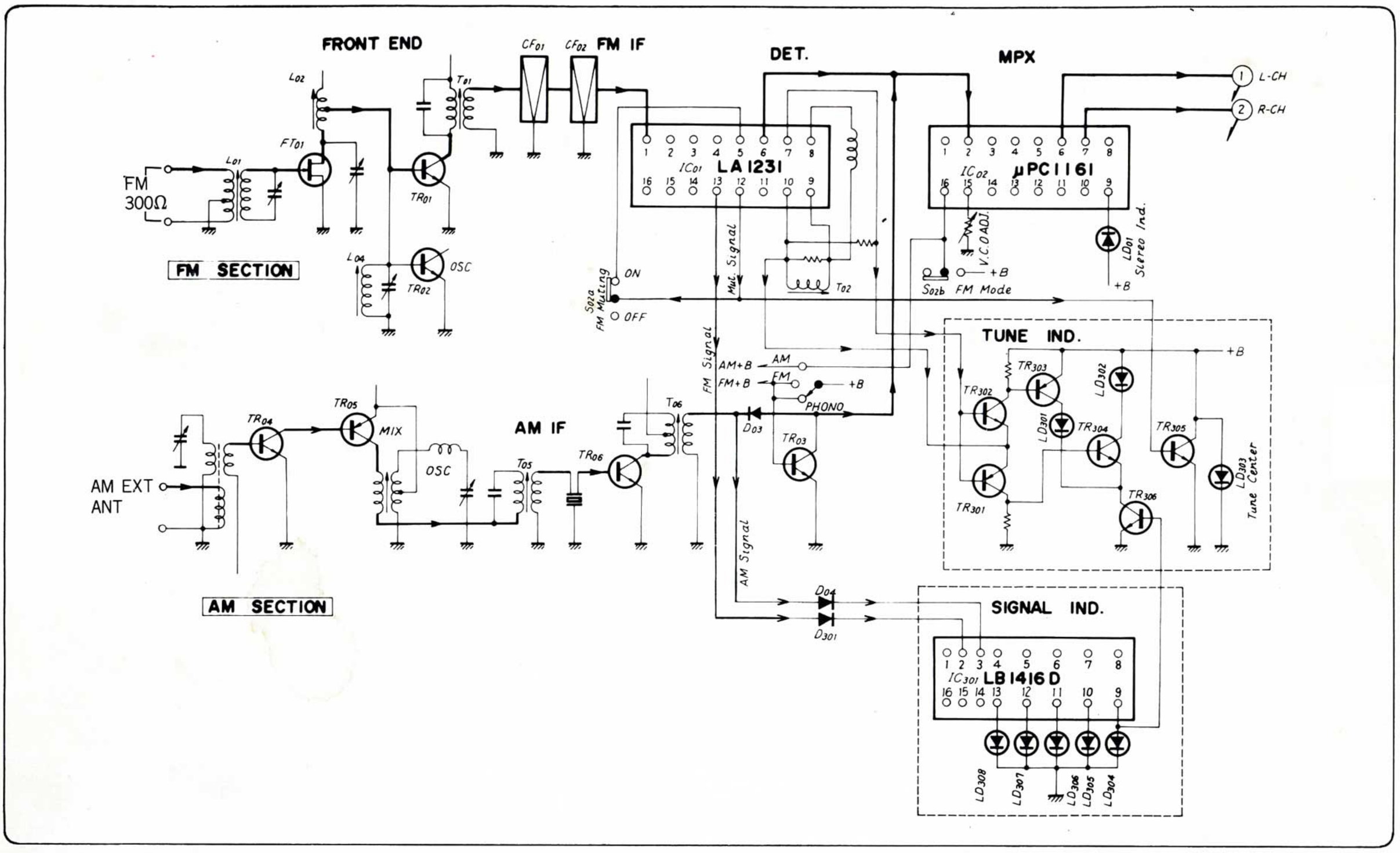

• Audio Section <R-30>

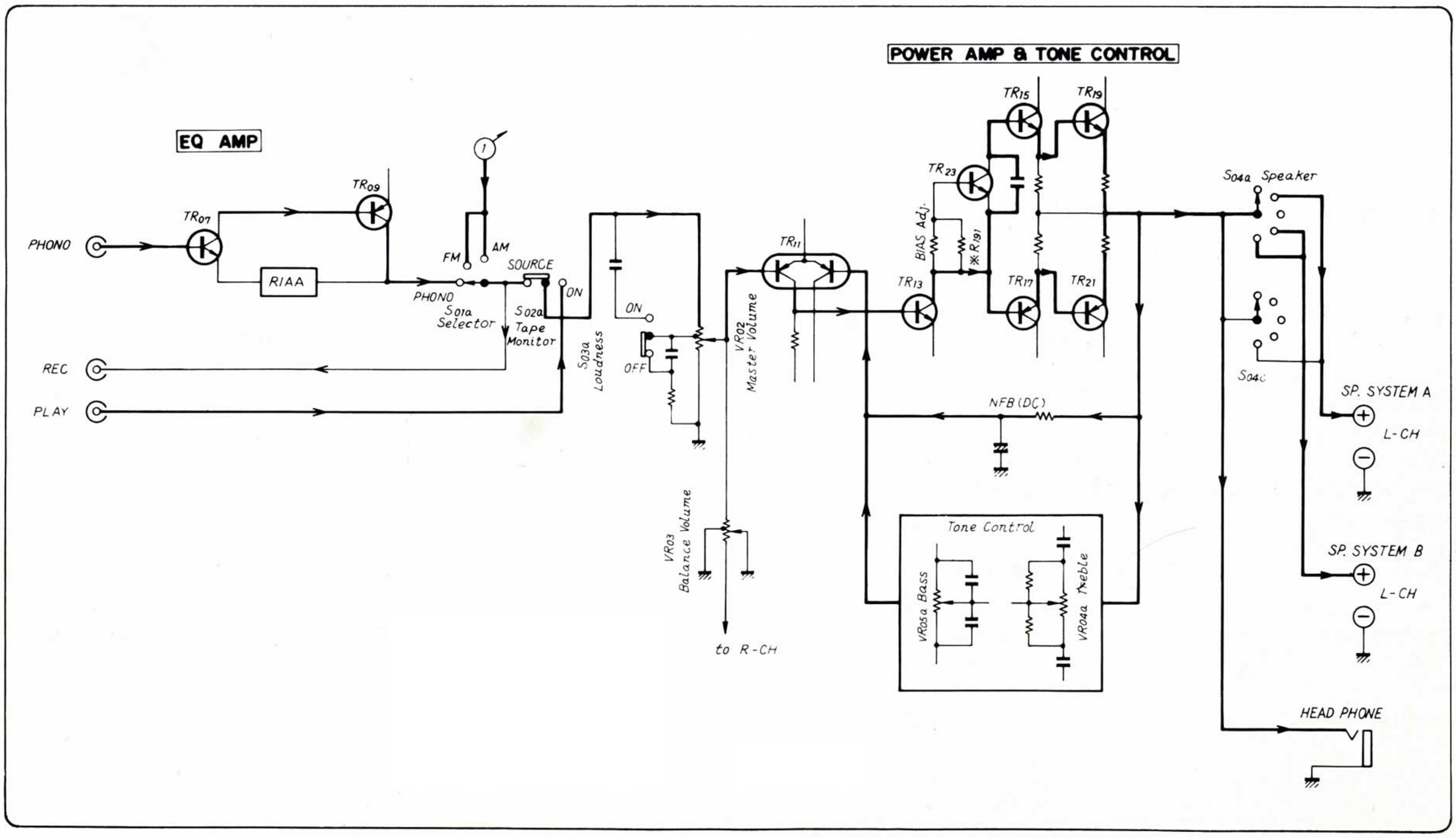

www.hifiengine.com

• Audio Section <R-50/70>

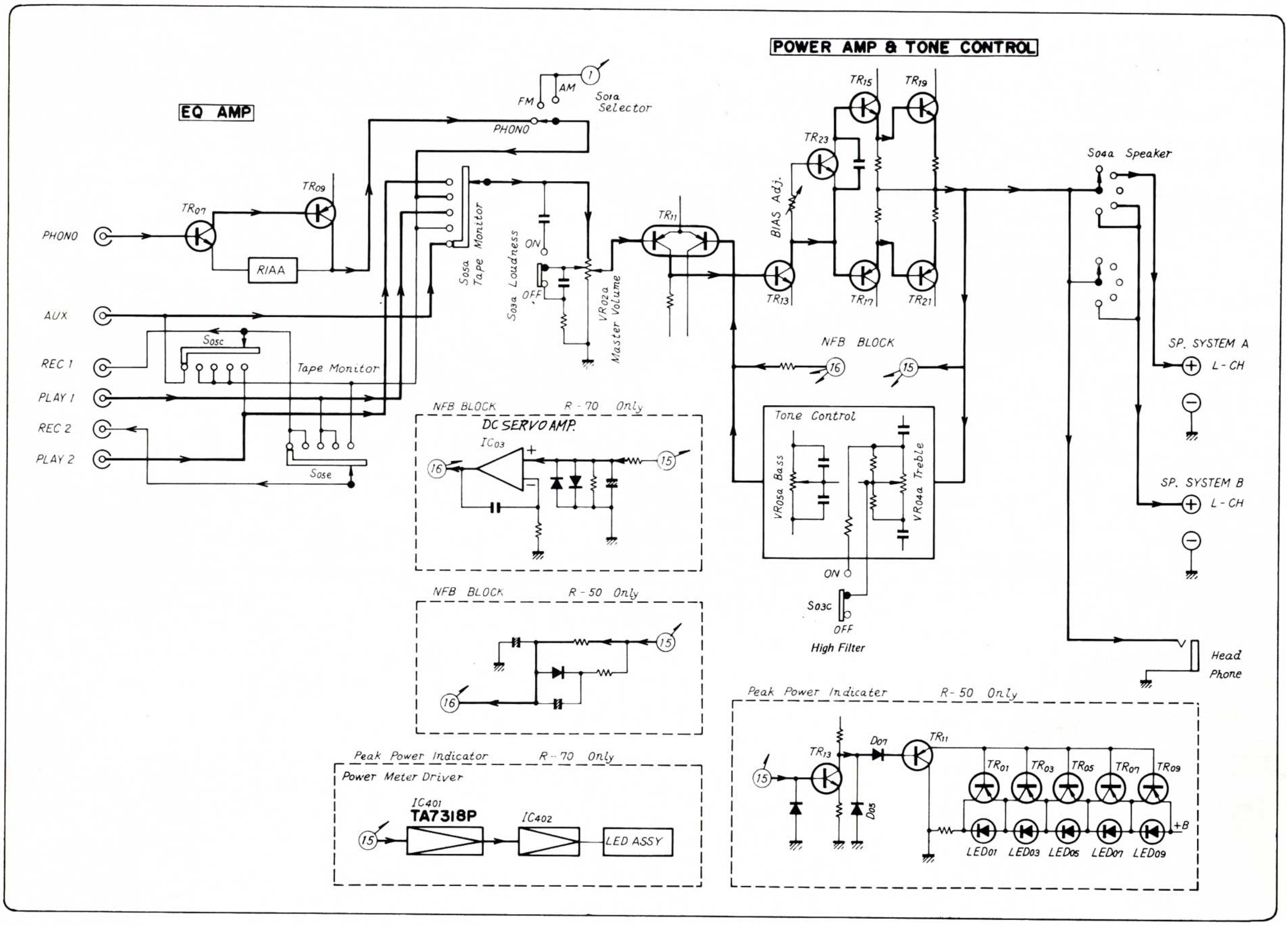

2. OPERATION OF DC SERVO AMP

The construction of power amp section is differential circuit using dual transistor at first stage and pure complementary darlington circuit with DC configuration at output stage. In addition, DC servo-amp is provided independently of NFB circuit of signal line in order to eliminate ultra-low frequency to supply a feed back signal of ultra-low frequency from output to first stage.

Fig. 2-1 shows the fundamental circuit of DC servo-amp.

This servo-amp constitutes a miller integrator with noninverting operational amp and a capacitor, and is rising the stability of DC amp A2 to apply a servo-output to the first stage from output of DC amp A2 to detect its ultra-low frequency output. The closed loop gain of the servo-amp is approximately −40 ~ −50 dB at the ultra-low frequency that DC voltage is not appeared at output since DC drift is completely reduced.

In the practical servo-amp, diodes for priventing excessive input are installed at the input pins of operational amp. Fig. 2-2 indicates the frequency response of DC servo-amp and "fc" is the cut-off frequency determined by C_1 and R_6.

Fig. 2-1 Configuration of DC servo amp

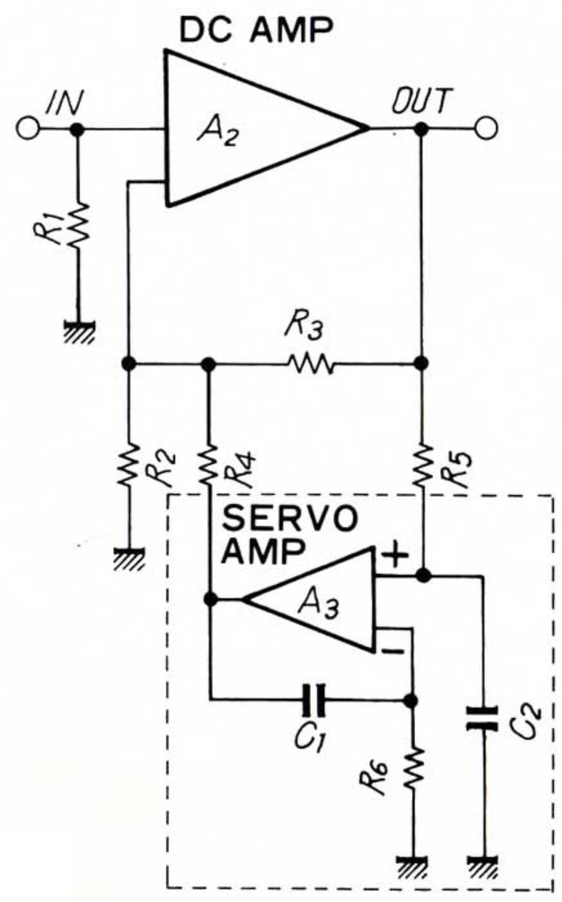

Fig. 2-2

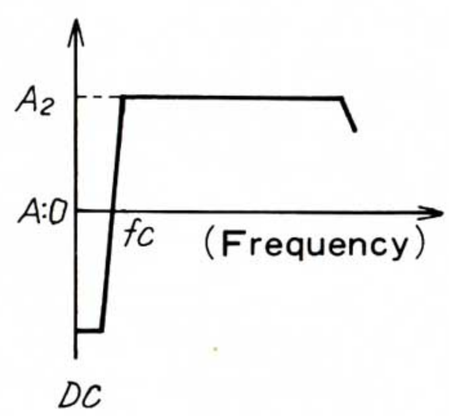

www.hifiengine.com

3. ADJUSTMENTS

3-1. Driver Circuit Board Adjustments (See Top View on page 8)

Note: 1. Master Volume . . . . . Minimum
2. Room Temperature . . . . . 18°C ~ 28°C (65°F ~ 83°F)
3. For the adjustment, run the unit for more than 3 minutes after the power is switched on.
4. By turning adjustment volumes, VR07 and VR08 counterclockwise, the bias current is decreased.
5. In case of adjusting or confirming bias current, avoid such a measurement that the power transistors are heated.

(1) Bias Current adjustment <R-50/70>

	MEASURE OUTPUT	ADJUST	ADJUST FOR
L-CH	Between emitters of TR19 and TR21 (Between A & B)	VR07 F-3110	DC 1 ~ 2 mV
R-CH	Between emitters of TR20 and TR22 (Between C & D)	VR08 F-3110	DC 1 ~ 2 mV

3-2. FM Adjustment

(1) FM IF, RF Adjustment and Dial Calibration (See Top View on page 8)

Note: 1. Selector . . . . . FM AUTO
2. FM Muting Switch . . . . . OFF
3. Connection . . . . Connect the output of genescope to TC02 through 100 pF ceramic capacitor.

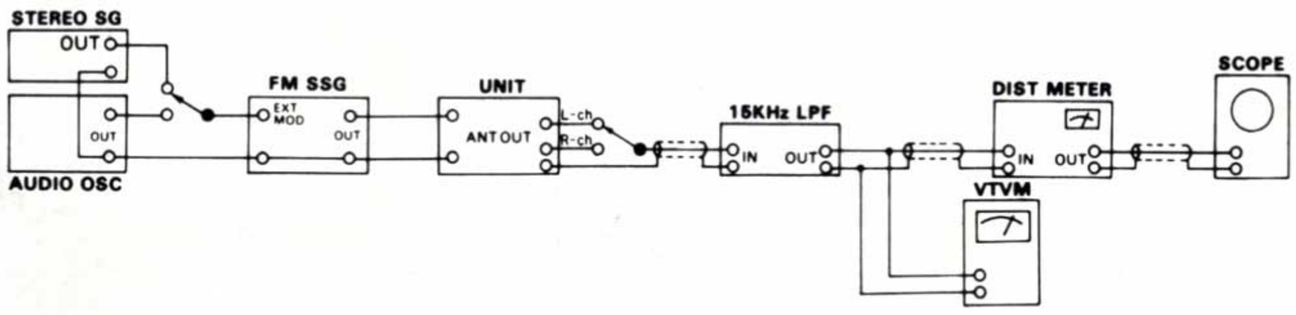

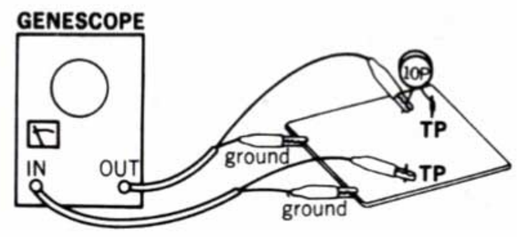

STEP	SUBJECT	FEED SIGNAL FROM	FEED SIGNAL TO	MEASURE OUTPUT	ADJUST	ADJUST FOR	REMARKS
1.	IF Coil Adj.	98 MHz ANT Input 10 dBf (4.8 dB) 1000 Hz (100% MOD) FM SSG	ANT terminal 300Ω	REC OUT L or R-CH VTVM & Scope	T01 F-3110 F-3104	Max. Output	
2.	Discriminator Coil Adj.	Output 80 dB Genescope	TC02 F-3110 F-3104	lead wire of R21 F-3110 F-3104	T02 F-3110 F-3104	Steep linearity of S curve Make symmetrical S curve	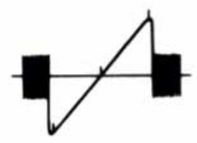
	Discriminator Coil Adj. in case of using Dist Meter	98 MHz ANT Input 65 dBf (59.8 dB) 1000 Hz (100% MOD) FM SSG	ANT terminal 300Ω	REC OUT L or R-CH Dist Meter	T02, T01 F-3110 F-3104	Minimum THD	
3.	Tuner Indicator Adj.	Same as above	Same as above	Between both lead wire of R22 DC Volt Meter	T02 F-3110 F-3104	DC 0V ± 0.1 V	Repeat step 2,3
4.	90 MHz Dial Calibration	90 MHz ANT Input 65 dBf (59.8 dB) 1000 Hz (100% MOD) FM SSG	Same as above	REC OUT L or R-CH VTVM & Scope	L04 F-3110 F-3104	Max. Output	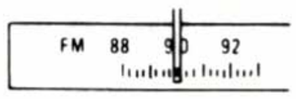
	106 MHz Dial Calibration	106 MHz ANT Input 65 dBf (59.8 dB) 1000 Hz (100% MOD) FM SSG	Same as above	Same as above	TC03 F-3110 F-3104	Same as above	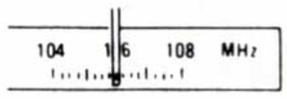
5.	90 MHz RF Adj.	90 MHz ANT Input Minimum Value with sine wave 100 Hz (100% MOD) FM SSG	Same as above	Same as above	L01, L02 F-3110 F-3104	Same as above	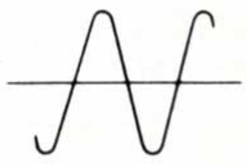
	106 MHz RF Adj.	106 MHz ANT Input Minimum Value with sine wave 100 Hz (100% MOD) FM SSG	Same as above	Same as above	TC01, TC02 F-3110 F-3104	Same as above	

Note: F-3110 . . . . . R-50/70
F-3104 . . . . . R-30

www.hifiengine.com

(2) FM STEREO Adjustment (See Top View on page 8)

Note: 1. Selector . . . . . FM AUTO
2. FM Mode Switch . . . . . AUTO

STEP	SUBJECT	FEED SIGNAL		MEASURE OUTPUT	ADJUST	ADJUST FOR	REMARKS
		FROM	TO				
1.	PLL VCO Adj.	98 MHz ANT Input 65 dBf (59.8 dB) FM SSG Pilot 19 kHz (9% MOD) SUB 1 kHz + Pilot (100% MOD) STEREO SG	ANT terminal 300Ω	Stereo indicator	VR01 F-3110 F-3104	Adjust the VR01 within center of lighting level	
	PLL VCO Adj. In case of using Freq. counter.	98 MHz ANT Input 65 dBf (59.8 dB) FM SSG (No MOD)	Same as above	lead wire of R37 F-3110, F-3104 Use Freq. counter	VR01 F-3110 F-3104	19 kHz ±50 Hz	

3-3. AM IF, RF Adjustment and Dial Calibration (See Top View on page 8)

Note: 1. Selector . . . . . AM
2. Confirm start point of dial pointer before alignment.

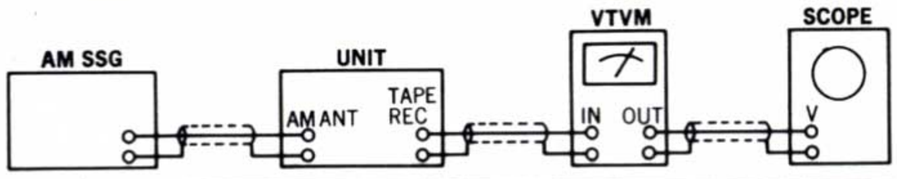

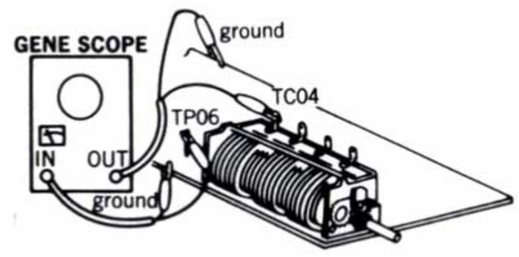

STEP	SUBJECT	FEED SIGNAL		MEASURE OUTPUT	ADJUST	ADJUST FOR	REMARKS
		FROM	TO				
1.	IF Coil Adj.	Genescope Output 80 dB	TC06 F-3110 F-3104	lead wire of R65 F-3110 F-3104	T05, T06 F-3110 F-3104	Max. IF waveform	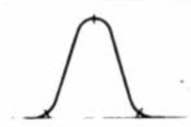
2.	600 kHz Dial Calibration	600 kHz ANT Input 60 dB 400 Hz (MOD 30%) AM SSG	AM ANT terminal	REC OUT L or R-CH VTVM & Scope	T03 F-3110 F-3104	Max. Output	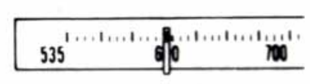
	1400 kHz Dial Calibration	1400 kHz ANT Input 60 dB 400 Hz (MOD 30%) AM SSG	Same as above	Same as above	TC06 F-3110 F-3104	Same as above	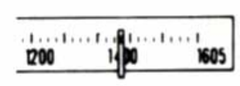
3.	600 kHz RF Adj.	600 kHz ANT Input 30 dB 400 Hz (MOD 30%) AM SSG	Same as above	Same as above	L08 Bar Antenna	Same as above	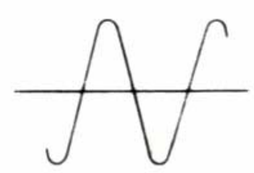
	1400 kHz RF Adj.	1400 kHz ANT Input 30 dB 400 Hz (MOD 30%) AM SSG	Same as above	Same as above	TC05 F-3110 F-3104	Same as above	

• NEW MEASUREMENT FOR FM.

Input signal level under the provision of IHFM-T-200, a new measurement method is indicated by available power ratio "dBf" To obtain approximate available power ratio "dBf", abstract 0.8 from attenuator indication of general FMSG (open load indication type); however, the former measurement, IHFM-T-100 is designated together too.

The way of modulation on IHFM-T-200 is shown below.

	modulation frequency	modulation mode	modulation fuctor
FM MONO	1000 Hz		100%
FM STEREO	1000 Hz	SUB	Pilot 9% Pilot + SUB 100%

• The relation between the standard input 65 dBf of IHFM-T-200 and the former indication "dB" is shown below.

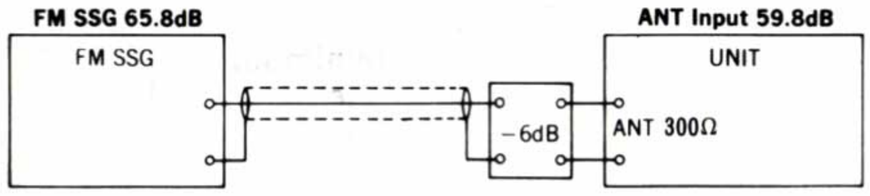

• Abbreviations

〈Equipment〉

AM FM Generator Oscilloscope . . . . . Genescope
AM Standard Signal Generator . . . . . AM SSG
FM Standard Signal Generator . . . . . FM SSG
FM Stereo Generator . . . . . Stereo SG
Oscilloscope . . . . . Scope
Audio Oscillator . . . . . Audio Osc.
Distortion Meter . . . . . Dist. Meter

〈Others〉

Antenna . . . . . ANT.
Modulation . . . . . MOD.
Total Harmonic Distortion . . . . . T.H.D.

www.hifiengine.com

4. PARTS LOCATION & PARTS LIST

- Since some of capacitors and resistors are omitted from parts lists in this Service Manual, refer to the Common Parts List for capacitors & resistors which was appended previously to each Sansui Manual.

4-1. F-3104 RF, AF Circuit Board (Stock No. 07063001 = R-30)

Conductor Side

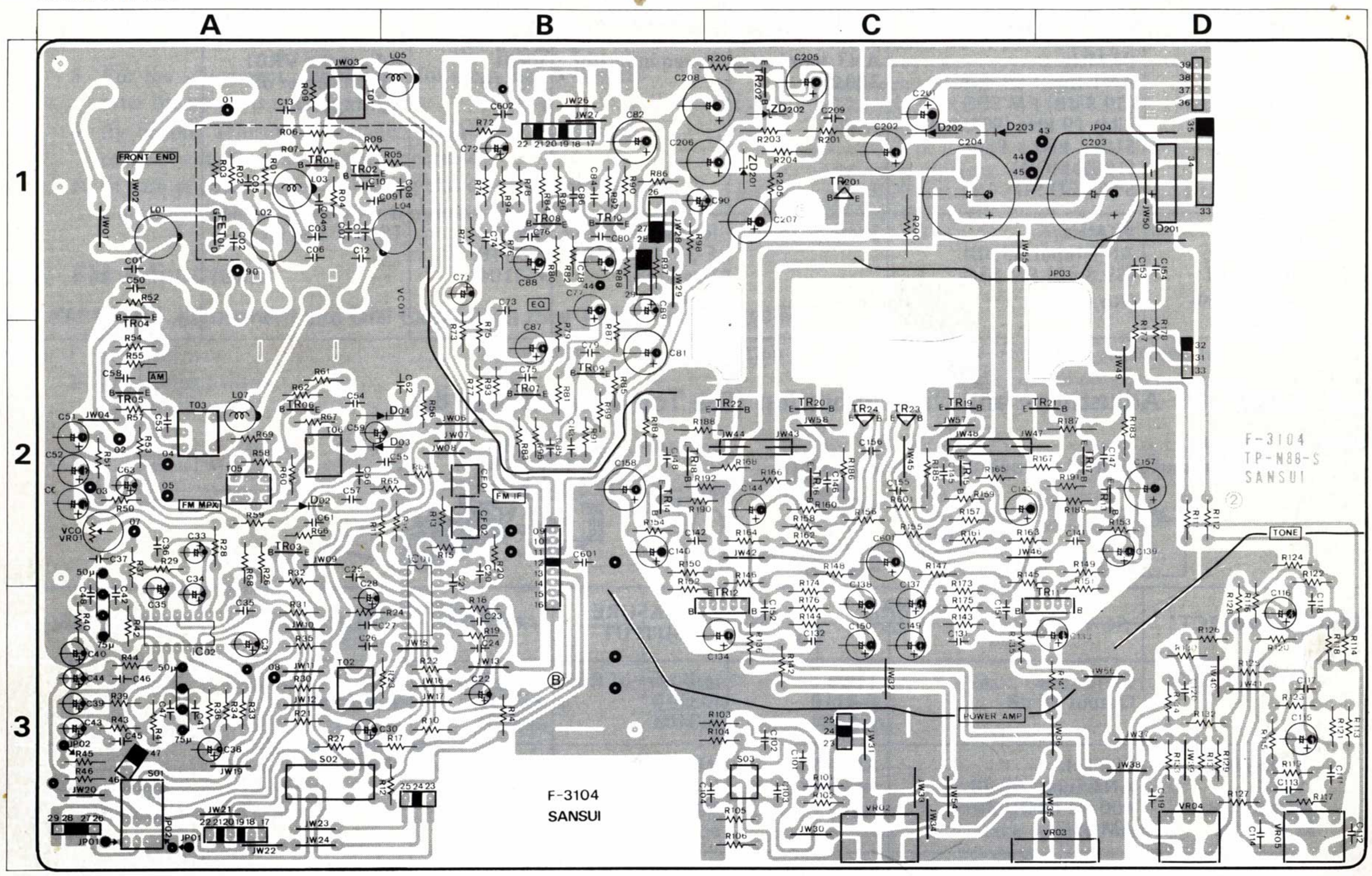

Parts List

Parts No.	Stock No.	Description	Position
•Transistor			
TR01	03063401, 2	2SC1674 L, K	1A
TR02	03069500, 1	2SC668 C, D	1A
TR03	03067400, 1	2SC1845 F, E	2A
TR04	03057901, 2	2SC930 D, E	1A
TR05	03004700, 1	2SA726 F, G	2A
TR06	03057901, 2	2SC930 D, E	2A
TR07, 08	03060701, 2	2SC1313 G, H	2B.1B
TR09, 10	03004700, 1	2SA726 F, G	2B.1B
TR11, 12	03603700, 1	2SA798 F, G	3D.3C
TR13, 14	03067400, 1	2SC1845 F, E	2D.2B
TR15, 16	03085201, 2	2SD438 E, F	2C
TR17, 18	03033601, 2	2SB560MP E, F	2D.2B
TR19, 20	03070300, 1	2SC1827 O, Y	2C
TR21, 22	03013400, 1	2SA769 O, Y	2D.2C
TR23, 24	03067400, 1	2SC1845 F, E	2C
TR201	03083901, 2	2SD313AL D, E	
TR202	03067400, 1	2SC1845 F, E	1C
•IC			
IC 01	03612300	LA1231	3B
IC 02	03609900	μPC1161C	3A
•FET			
FET01	03703700, 1	2SK120 1, 2	1A

Parts No.	Stock No.	Description	Position
•Diode			
D 01	03111600	1S2473D	
D 02	03111600	1S2473D	2A
D 03, 04	03117800	1N60P	2A, B
D 201	03117000	RB-152	
D 202	03117700	10E-2	1C
D 203	03117700	10E-2	1C
•Zener Diode			
ZD201	03179000	RD13E B	1C
	03179100	RD13E C	
ZD202	03180900	RD33E C	1C
L 01	42007200	RF Coil	1A
L 02	42103400	RF Coil	1A
L 03	49002800	Inductor Coil 1.0μH	1A
L 04	42204000	OSC Coil	1B
L 05	49002800	Inductor Coil 1.0μH	1B
L 06	49004000	Inductor Coil 100μH	
L 07	49002800	Inductor Coil 1.0μH	
L 08	42010300	Bar Antenna	
T 01	42359400	IF Coil	1A
T 02	42362900	FM Detector	3A
T 03	42207400	AM OSC Coil	2A
T 05	09106100	SFL 450B	2A

Parts No.	Stock No.	Description	Position
T 06	42306600	AM IFT	2A
CF 01	09106400	Ceramic Filter 10.7 MHz	2B
CF 02	09106400	Ceramic Filter 10.7 MHz	2B
VR01	10351100	4.7kΩ (B) Volume, VCO adj.	2A
VR02	10155700	150kΩ (B) x 2 Master Volume	3C
VR03	10054400	250kΩ (B) x 2 Balance Volume	3D
VR04, 05	10155600	100kΩ (C) x 2 Bass, Treble Volume	3D
S 01	11907600	Selector Switch	3A
S 02	11322100, 1	Tape Mon., FM Mode/ Muting Switch	3A
S 03	11316200, 1	Loudness Switch	3C
VC01	12203000	Variable Capacitor	1B
TC 01	12300900	Trimmer Capacitor	
	22007200	6P Phono, Tape Terminal	
	22902400	Speaker System A Terminal	
	22902500	Speaker System B Terminal	
	22902600	ANT Terminal	

4-2. F-3111 Equalizer Circuit Board (Stock No. 75516601 = R-50) (Stock No. 75516701 = R-70)

Conductor Side

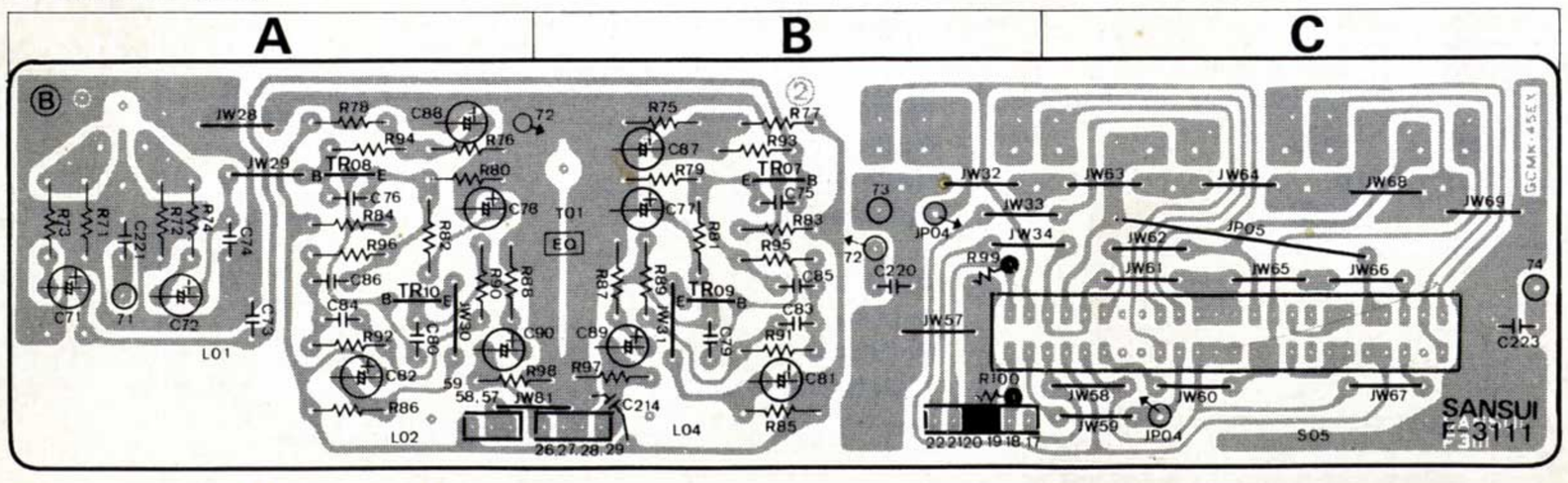

Parts List

Parts No.	Stock No.	Description	Position
•Transistor			
TR07, 08	03060701, 2	2SC1313 G, H	B.A
TR09, 10	03004700, 1	2SA726 F, G	B.A
S 05	11907700	Tape Moni./Copy Switch	C
	22007000	2P Phono Terminal	
	22007100	4P Tape 2 Terminal	
	22007200	6P Aux, Tape 1 Terminal	

www.hifiengine.com

4-3. F-3110 RF, AF Circuit Board (Stock No. 07063101 = R-50) (Stock No. 07062901 = R-70)

Note: As the stock number in the parts list on this service manual is indicated in 8 digit to differ from ordinary 7 digit, please be carefull when ordering parts.

Conductor Side

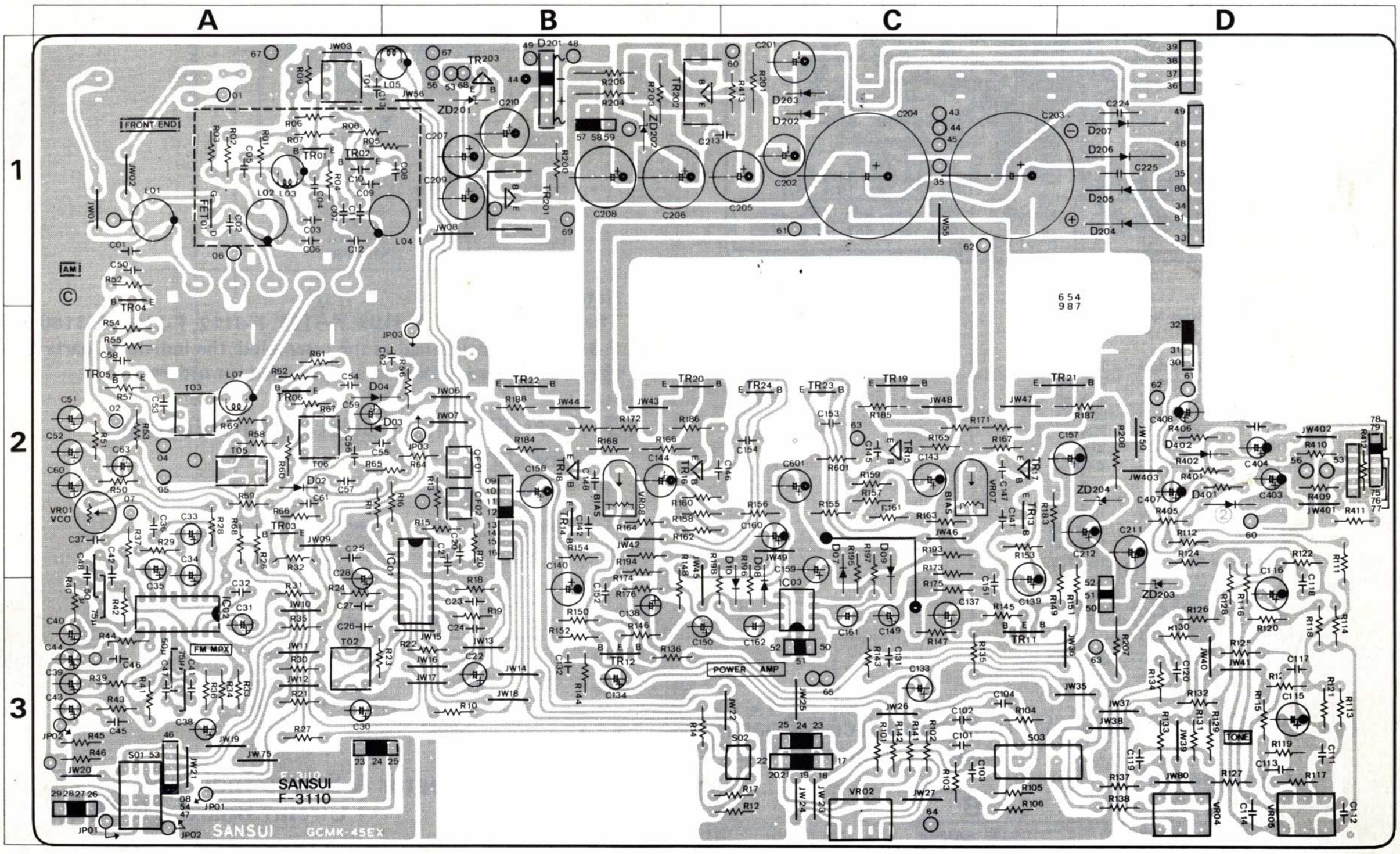

Parts List

Parts No.	Stock No.	Description	Position
•Transistor			
TR01	03063401, 2	2SC1674 L, K	1A
TR02	03069500, 1	2SC668 C, D	1A
TR03	03067400, 1	2SC1845 F, E	2A
TR04	03057901, 2	2SC930 D, E	1A
TR05	03004700, 1	2SA726 F, G	2A
TR06	03057901, 2	2SC930 D, E	2A
TR11, 12	03602900, 1	2SA798 F, G	3C.3B
TR13, 14	03067400, 1	2SC1845 F, E <R-50>	2C.2B
	03064001, 2	2SC1904 B, V <R-70>	
TR15, 16	03084801, 2	2SD358 D, E	2C.2B
TR17, 18	03033101, 2	2SB528 D, E	2C.2B
TR19, 20	03070000, 1	2SC2577 O, Y <R-50>	2C.2B
	03069800, 1	2SC2579 O, Y <R-70>	
TR21, 22	03013100, 1	2SA1102 O, Y <R-50>	2C, D.2B
	03012900, 1	2SA1104 O, Y <R-70>	
TR23, 24	03067400, 1	2SC1845 F, E	2C
TR201	03083901, 2	2SD313AL D, E	1B
TR202	03084801, 2	2SD358 D, E	1B
TR203	03084801, 2	2SD358 D, E	1B
•IC			
IC 01	03612300	LA1231	2, 3A
IC 02	03609900	μPC1161C	3A
IC 03	03607700	NJM4558D <R-70>	3C
IC 401	03610000	TA7318P <R-70>	
•FET			
FET01	03703700, 1	2SK120 (1), (2)	1A
•Diode			
D 01	03117600	1S2473D	
D 02	03117600	1S2473D	2A
D 03, 04	03110600	1N60P	2A, B
D 07	03117600	1S2473D	2, 3C
D 08	03117600	1S2473D	2, 3C
D 09	03117600	1S2473D	2, 3C
D 10	03117600	1S2473D	2, 3C
D 201	03117000	RB-152	1B
D 202	03117700	10E-2	1C
D 203	03117700	10E-2	1C
D 204	03115700	ERD03-02H	1D
D 205	03115700	ERD03-02H	1D
D 206	03115700	ERD03-02H	1D
D 207	03115700	ERD03-02H	1D
•Zener Diode			
ZD201	03163200	RD13E C	1B
ZD202	03180900	RD33E C	1B
ZD203	03179300	RD15E C <R-70>	3D
ZD204	03179300	RD15E C <R-70>	2D
C 203	00316100	6800μF 50V E.C. <R-50>	1C
	08301800	6800μF 63V E.C. <R-70>	
C 204	00316100	6800μF 50V E.C. <R-50>	1C
	08301800	6800μF 63V E.C. <R-70>	
R 171, 172	00091700	0.33Ω x 2 5W Ce.R.	2C.2B
R 201	00179200	1kΩ 1W N.I.R. <R-50>	1C
R 207	00181800	2.7kΩ 1W N.I.R.	3D
L 01	42007200	RF Coil	1A
L 02	42103400	RF Coil	1A
L 03	49002800	Inductor Coil 1.0μH	1A
L 04	42204000	OSC Coil	1B
L 05	49002800	Inductor Coil 1.0μH	1B
L 06	49004000	Inductor Coil 100μH	
L 07	49002800	Inductor Coil 1.0μH	2A
L 08	42010300	Bar Antenna	
T 01	42359400	IF Coil	1A
T 02	42362900	FM Detector Coil	3A
T 03	42207400	AM OSC Coil	2A
T 05	09106100	AM IF Coil	2A
T 06	42306600	AM IF Coil	2A
CF 01	09106400	Ceramic Filter 10.7 MHz	2B
CF 02	09106400	Ceramic Filter 10.7 MHz	2B
VR01	10351100	4.7kΩ (B) Volume, VCO adj.	2A
VR02	10250300	150kΩ (B) x 2 Master Volume	3C
VR04, 05	10155600	100kΩ (C) x 2 Treble, Bass Volume	3D
VR07, 08	10370400	1kΩ (B) Volume, bias current adj.	2C.2B
S 01	11907600	Selector Switch	3A
S 02	11316200, 1	FM Mode/Muting Switch	3C
S 03	11322100, 1	Loudness Switch	3C
VC01	12203000	Variable Capacitor	
TC01	12300900	Trimmer Capacitor	
	22902400	Speaker System A Terminal	
	22902500	Speaker System B Terminal	
	22902600	Antenna Terminal	

• Abbreviations

C.R. . . . . . Carbon Resistor
S.R. . . . . . Solid Resistor
Ce.R. . . . . . Cement Resistor
M.R. . . . . . Metal Film Resistor
F.R. . . . . . Fusing Resistor
N.I.R. . . . . . Non-Inflammable Resistor
C.C. . . . . . Ceramic Capacitor
C.T. . . . . . Ceramic Capacitor, Temperature Compensation
E.C. . . . . . Electrolytic Capacitor
E.L. . . . . . Low Leak Electrolytic Capacitor
E.B. . . . . . Bi-Polar Electrolytic Capacitor
E.BL. . . . . Low Leak Bi-Polar Electrolytic Capacitor
Ta.C. . . . . . Tantalum Capacitor
F.C. . . . . . Film Capacitor
M.P. . . . . . Metalized Paper Capacitor
P.C. . . . . . Polystyrene Capacitor
G.C. . . . . . Gimmic Capacitor

www.hifiengine.com

4-4. F-3113 Peak Power Indicator Circuit Board

(Stock No. 75989801 = R-50)

Conductor Side

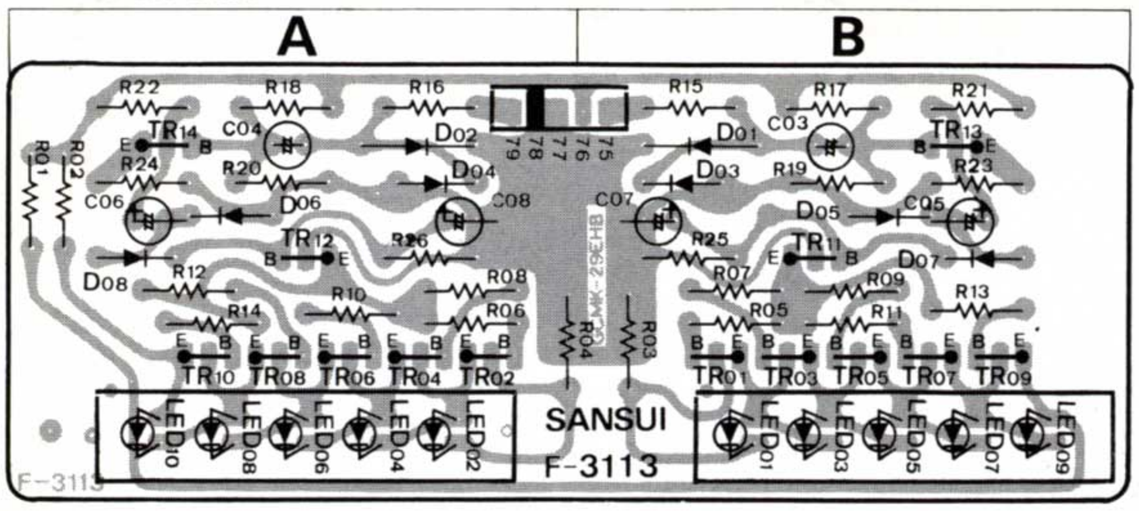

Parts List

Parts No.	Stock No.	Description	Position
•Transistor			
TR01, 02	03012500	2SA786 Q	B,A
TR03, 04	03012500	2SA786 Q	B,A
TR05, 06	03012500	2SA786 Q	B,A
TR07, 08	03012500	2SA786 Q	B,A
TR09, 10	03012500	2SA786 Q	B,A
TR11, 12	03012500	2SA786 Q	B,A
TR13, 14	03069400	2SC2021 Q	B,A
•Diode			
D 01, 02	03117800	1N60	B,A
D 03, 04	03117600	1S2473D	B,A
D 05, 06	03117600	1S2473D	B,A
D 07, 08	03117600	1S2473D	B,A
LD01, 02	03193200	GL-9PR9	B,A
LD03, 04	03193200	GL-9PR9	B,A
LD05, 06	03193200	GL-9PR9	B,A
LD07, 08	03193200	GL-9PR9	B,A
LD09, 10	03193200	GL-9PR9	B,A

4-5. F-3106 Tune & Signal Indicator Circuit Board

(Stock No. 75993801 = R-30)

Conductor Side

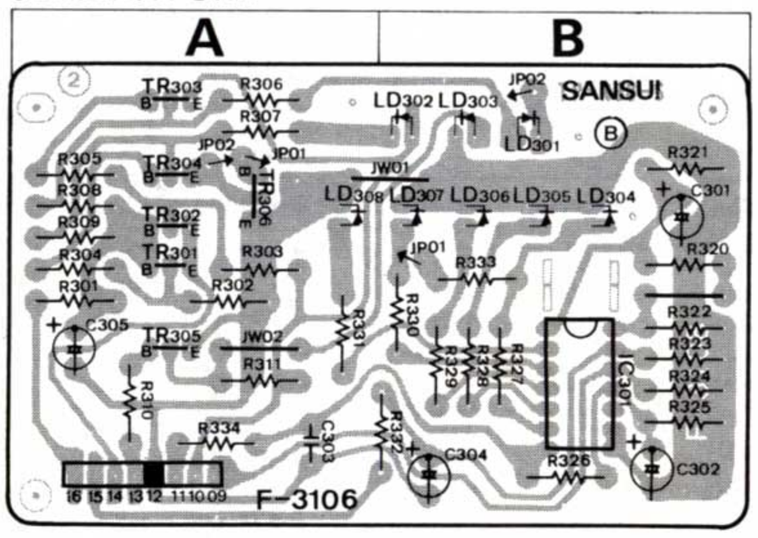

Parts List

Parts No.	Stock No.	Description	Position
•Transistor			
TR301	03012500, 1	2SA786 Q, R	A
TR302	03069400, 1	2SC2021 Q, R	A
TR303	03012500, 1	2SA786 Q, R	A
TR304	03069400, 1	2SC2021 Q, R	A
TR305	03069400, 1	2SC2021 Q, R	A
TR306	03069400, 1	2SC2021 Q, R	A
•IC			
IC 301	03611600	LB1416	B
LD31, 32	03193500	GL-9PR6	
LD33	03193600	GL-2PGI	
LD34 ~ 38	03193200	GL-9PR9	

4-6. F-3179 Tune & Signal Indicator Circuit Board

(Stock No. 75989901 = R-50) (Stock No. 75990301 = R-70)

Conductor Side

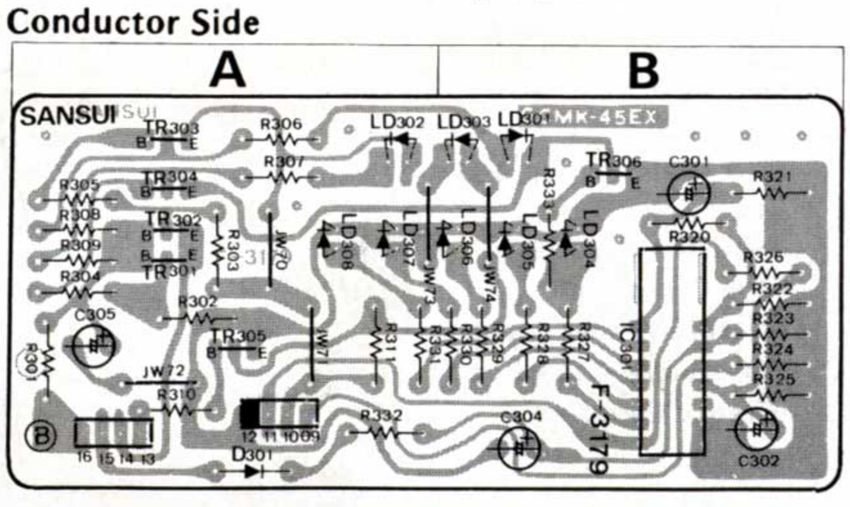

Parts List <F-3179>

Parts No.	Stock No.	Description	Position
•Transistor			
TR301	03012500, 1	2SA786 Q, R	A
TR302	03069400, 1	2SC2021 Q, R	A
TR303	03012500, 1	2SA786 Q, R	A
TR304	03069400, 1	2SC2021 Q, R	A
TR305	03069400, 1	2SC2021 Q, R	A
TR306	03069400, 1	2SC2021 Q, R	B
•IC			
IC 301	03611600	LB1416	
•Diode			
D 301	03111600	1S2473D	A
LD31, 32	03193500	GL-9PR6	
LD33	03193600	GL-2PGI	
LD34 ~ 38	03193200	GL-9PR9	

- **Note:**
  The circuit boards, F-3109, F-3105, F-3112, F-3107, F-3180 & F-3108 are not supplied as the assembled, the individual parts on the circuit board, however, are provided for orders.

4-7. F-3109 Voltage Selector Circuit Board

Parts List

Parts No.	Stock No.	Description
F 01	04312300	Power Fuse 1.5A 250V (220 ~ 240V) <R-30>
	04322600	Power Fuse 3A 250V (110 ~ 120V) <R-30>
	04312400	Power Fuse 2A 250V (220 ~ 240V) <R-50>
	04322800	Power Fuse 4A 250V (110 ~ 120V) <R-50>
	04322900	Power Fuse 5A 250V (110 ~ 120V) <R-70>
	04312500	Power Fuse 2.5A 125V (220 ~ 240V) <R-70>

4-8. F-3105 Selector & Stereo Indicator Circuit Board <R-30/R-50>

Parts List

Parts No.	Stock No.	Description
LD01, 02	03193200	GL-9PR9

4-9. F-3112 Selector & Stereo Indicator Circuit Board <R-70>

Parts List

Parts No.	Stock No.	Description
LD01	03193200	GL-9PR9
LD02	03193200	GL-9PR9
LD03	03193300	GL-9NG9
LD04	03193200	GL-9PR9

4-10. F-3107 Power/Speaker Switch Circuit Board <R-30>

Parts List

Parts No.	Stock No.	Description
S 04	11019600	Speakers Switch

4-11. F-3180 Power/Speaker Switch Circuit Board <R-70>

Parts List

Parts No.	Stock No.	Description
S 04	11019600	Power / Speaker Switch

4-12. F-3108 Head Phone Circuit Board

Parts List

Parts No.	Stock No.	Description
J 01	24306000	Head Phone Jack

5. OTHER PARTS

• R-30

5-1. Front View

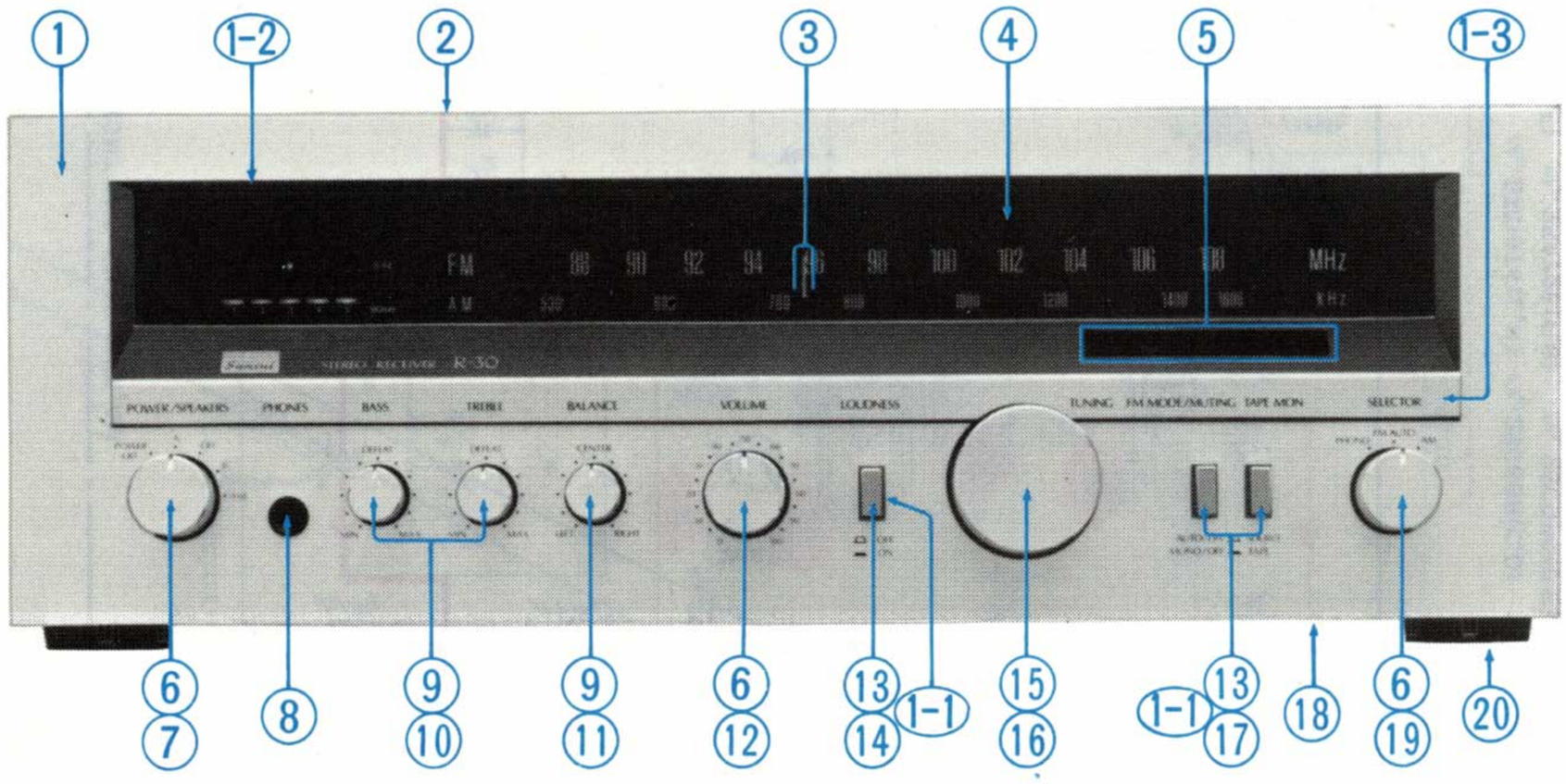

Parts List

Parts No.	Stock No.	Description
1	70084600	Front Panel Ass'y
1-1	53967700	Knob Guide
1-2	54087400	Front Glass
1-3	54579900	Dial Frame
2	57272400	Bonnet
3	71161200	Dial Pointer
4	54087520	Dial Glass
5	54465200	Smoked Plate
6	53195800	Knob, power/speakers, master volume, selector

Parts No.	Stock No.	Description
7	11019600	Power/Speaker Switch
8	24306000	Head Phone Jack
9	53195600	Knob, bass, treble, balance
10	10155600	Bass, Treble Volume
11	10054400	Balance Volume
12	10155700	Master Volume
13	53194910	Knob, loudness, FM mode/ muting, tape moni.
14	11316200, 1	Loudness Switch
15	53195400	Knob, tuning

Parts No.	Stock No.	Description
16	70366900	Tuning Unit
17	11322100, 1	FM Mode/Muting, Tape Mon. Switch
18	50664200	Bottom Plate
19	11907600	Selector
20	55074510	Rubber Patch

5-2. Top View

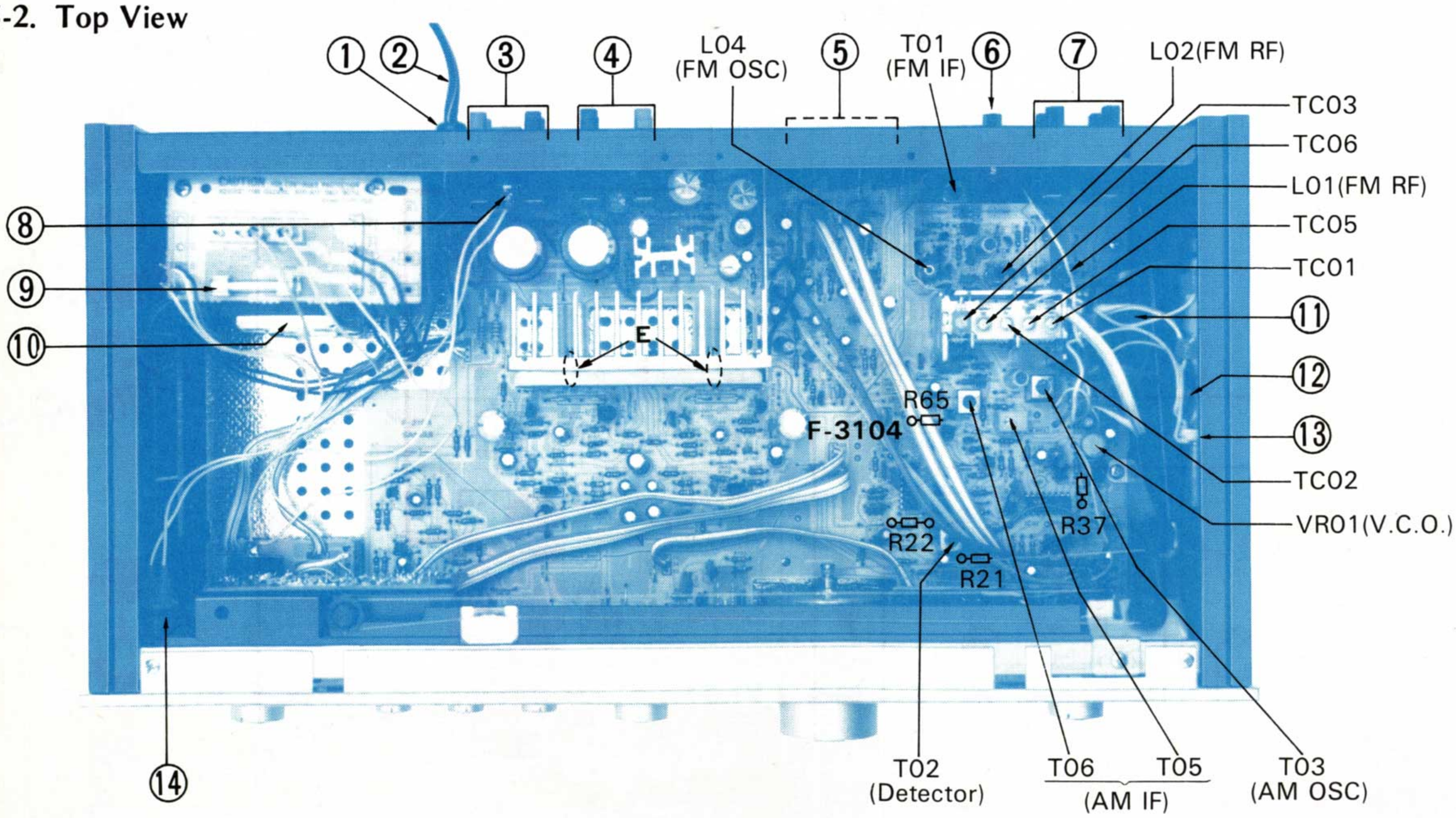

Parts List

Parts No.	Stock No.	Description
1	39106000	Strain Relief
2	38004700	Power Cord
3	22902500	Speaker System B Terminal
4	22902400	Speaker System A Terminal
5	22007200	6P Phono, Tape Terminal

Parts No.	Stock No.	Description
6	22301500	GND Terminal
7	22902600	Antenna Terminal
8	24501100	AC Outlet
9	04312300	Power Fuse, 1.5A 250V (220 ~ 240V)
	04322600	Power Fuse, 3A 250V (110 ~ 120V)

Parts No.	Stock No.	Description
10	40032100	Power Transformer
11	61468110	Pulley
12	42010400	Bar Antenna
13	52968600	Antenna Holder
14	04007600	Pilot Lamp, 8V 300mA

• R-50/70

5-3. Front View

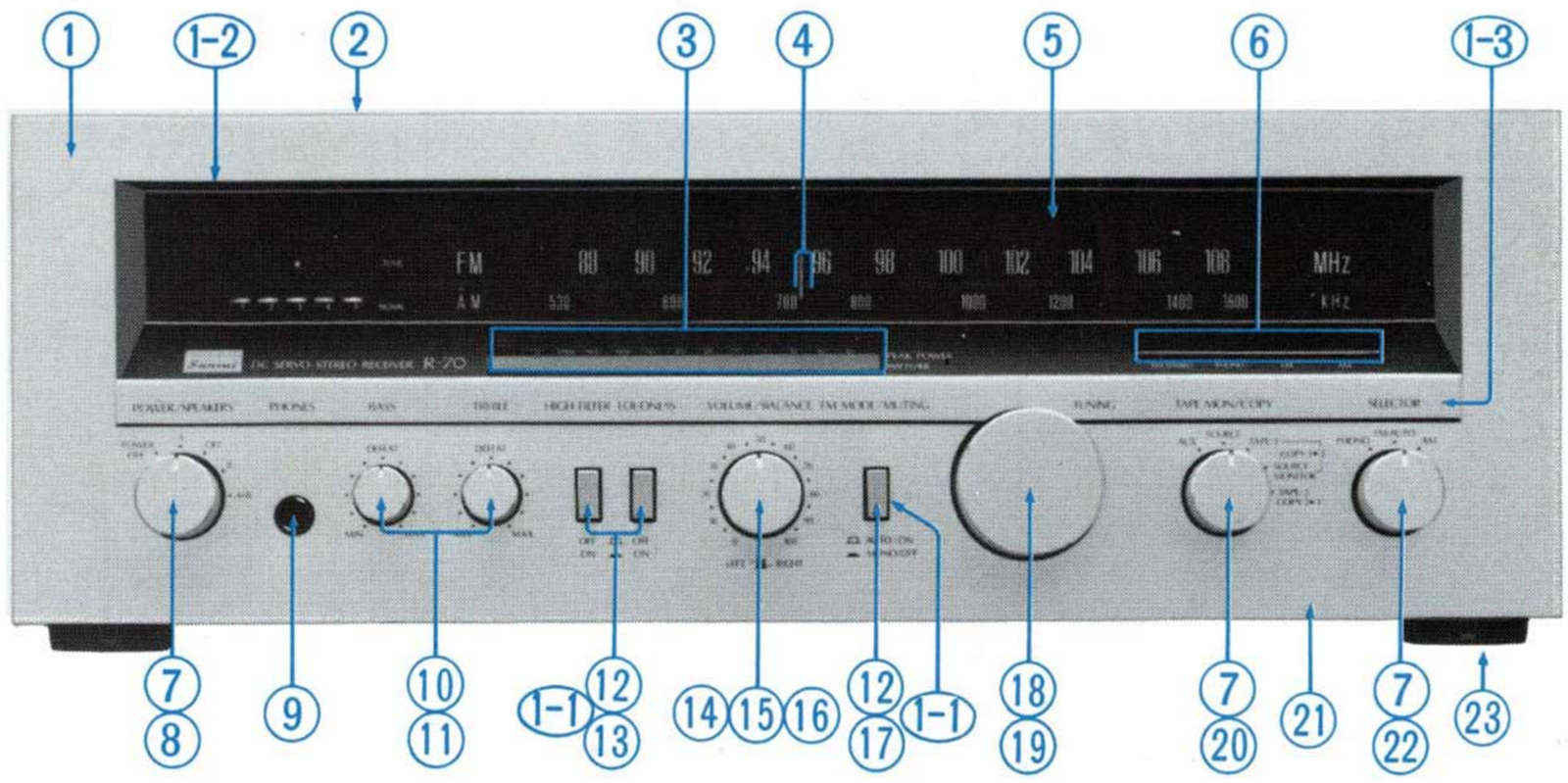

Parts List

Parts No.	Stock No.	Description
1	70084700	Front Panel Ass'y
1-1	53967800	Knob Guide
1-2	54087400	Front Glass
1-3	54579800	Dial Frame
2	57272400	Bonnet
3	54465000	Smoked Plate <R-50>
	54465100	Smoked Plate <R-70>
4	71161200	Dial Pointer
5	54087520	Dial Glass
6	54465200	Smoked Plate

Parts No.	Stock No.	Description
7	53195800	Knob, power/speakers, tape mon./copy, selector
8	11019600	Power/Speakers Switch
9	24306000	Head Phone Jack
10	53195600	Knob, bass, treble
11	10155600	Bass, Treble Volume
12	53194910	Knob, high filter, roudness, FM mode/muting
13	11322100, 1	High Filter, Loudness Switch
14	53195710	Knob, L-ch volume

Parts No.	Stock No.	Description
15	53195900	Knob, R-ch volume
16	10250300	Master Volume, 150kΩ (B) x 2
17	11316200, 1	FM Mode/Muting Switch
18	53195400	Knob, tuning
19	70366900	Tuning Unit
20	11907700	Tape Mon./Copy Switch
21	50664200	Bottom Plate
22	11907600	Selector
23	55074510	Rubber Patch

5-4. Top View

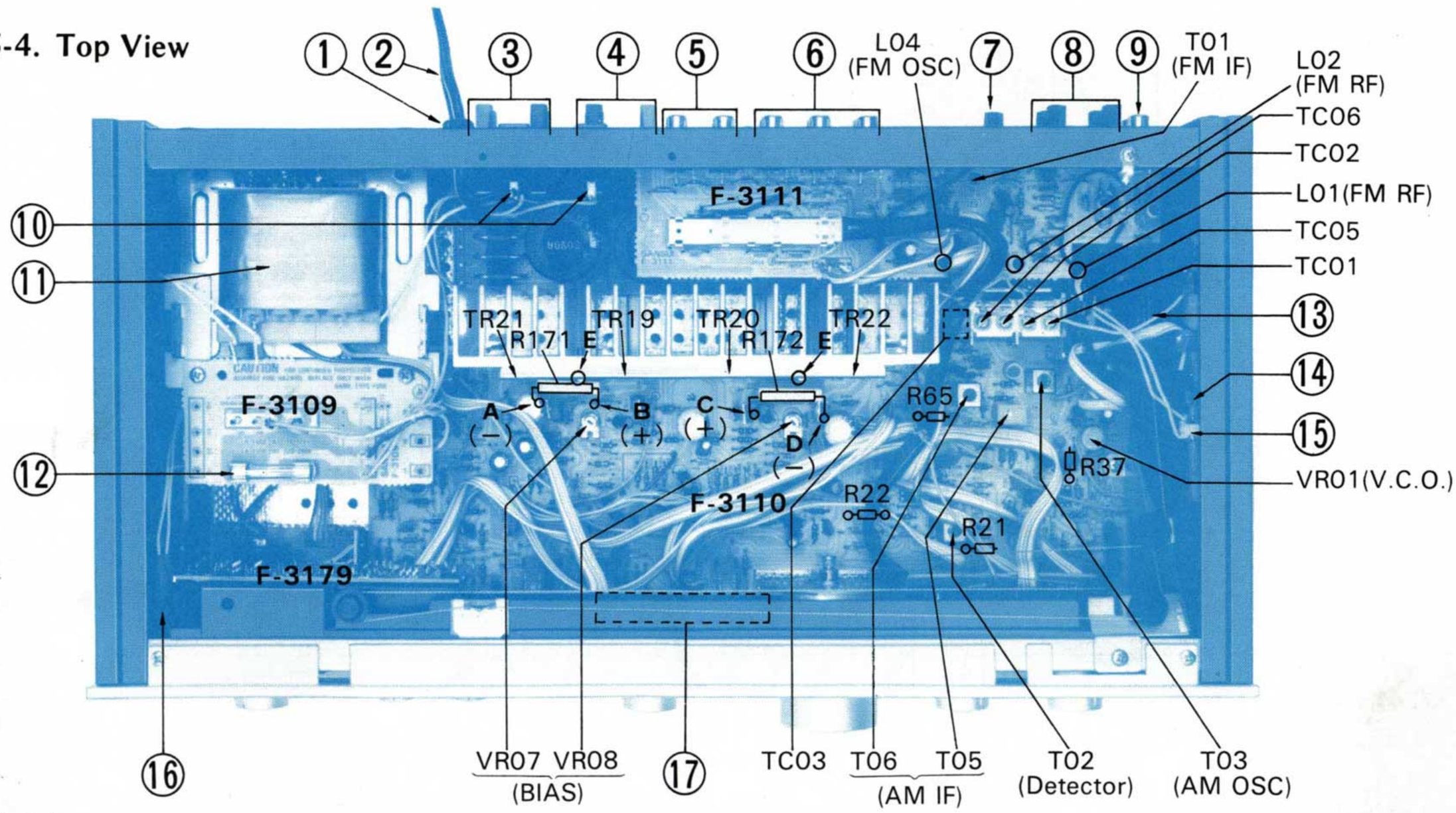

Parts List

Parts No.	Stock No.	Description
1	39106000	Strain Relief
2	38004700	Power Cord
3	22902500	Speaker System B Terminal
4	22902400	Speaker System A Terminal
5	22007100	4P Tape 2 Terminal
6	22007200	6P Aux, Tape I Terminal
7	22301500	GND Terminal
8	22902600	Antenna Terminal
9	22007000	2P Phono Terminal
10	24501100	AC Outlet

Parts No.	Stock No.	Description
11	40032000	Power Transformer <R-50>
	40032900	Power Transformer <R-70>
12	04312400	Power Fuse, 2A 250V (220 ~ 240V) <R-50>
	04322800	Power Fuse, 4A 250V (110 ~ 120V) <R-50>
	04322900	Power Fuse, 5A 250V (110 ~ 120V) <R-70>
	04312500	Power Fuse, 2.5A 250V (220 ~ 240V) <R-70>

Parts No.	Stock No.	Description
13	61468110	Pulley
14	42010400	Bar Antenna
15	52968600	Antenna Holder
16	04007600	Pilot Lamp, 8V 300mA
17	03194200	LED Ass'y, peak level meters <R-70>
	60560300	Flexible Wire Ass'y

- Design and specifications subject to change without notice for improvement.
- La présentation et les spécifications sont susceptibles d'éter modifiées sans préavis par suites d'améliorations éventuelles.
- Änderungen, die dem technischen Fortschritt dienen, bleiben vorbehalten.

6. SCHEMATIC DIAGRAM 6-1. R-30

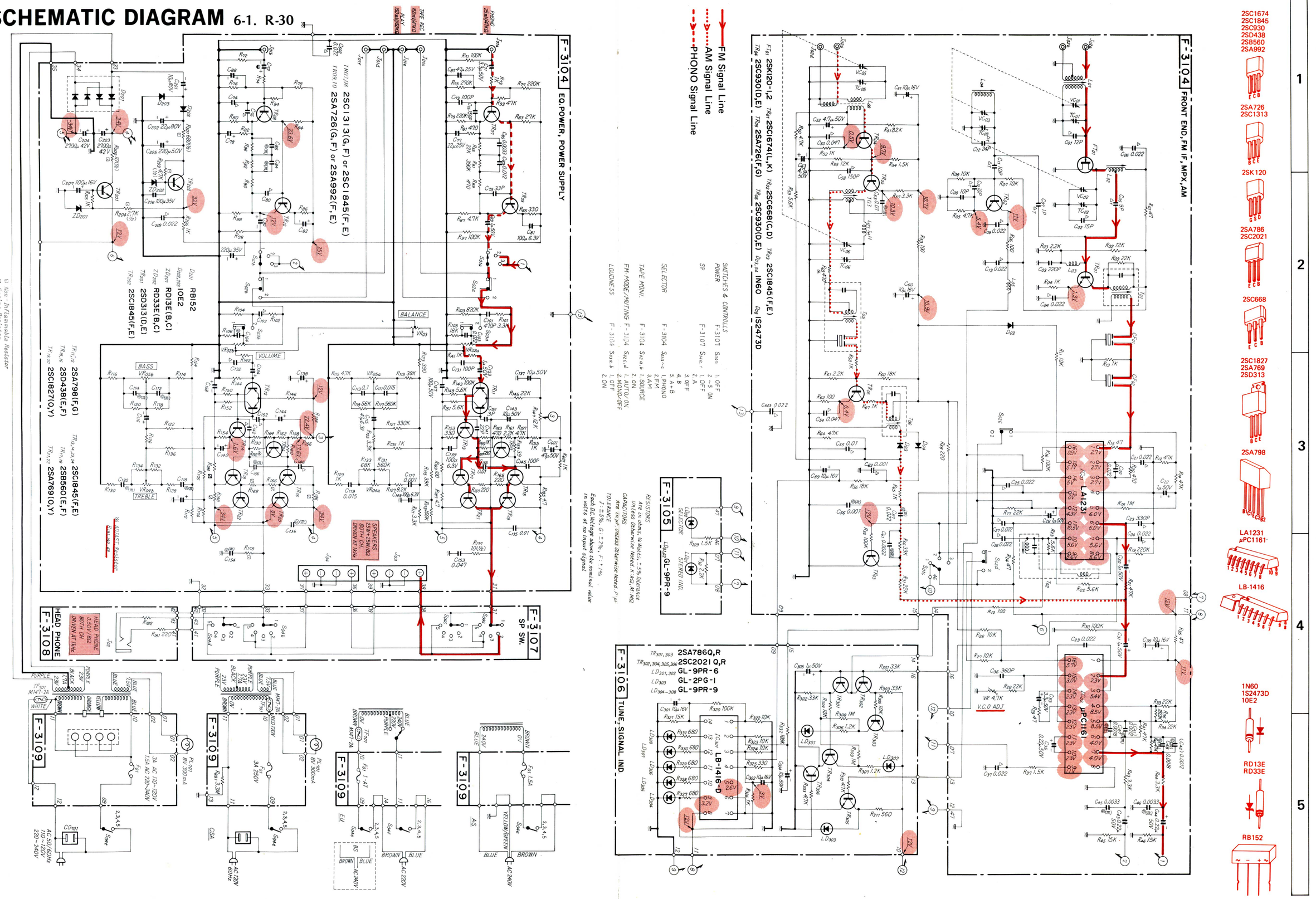

- Design and specifications subject to change without notice for improvement.
- La présentation et les spécifications sont susceptibles d'éter modifiées sans préavis par suites d'améliorations éventuelles.
- Änderungen, die dem technischen Fortschritt dienen, bleiben vorbehalten.

6-2. R-50/R-70

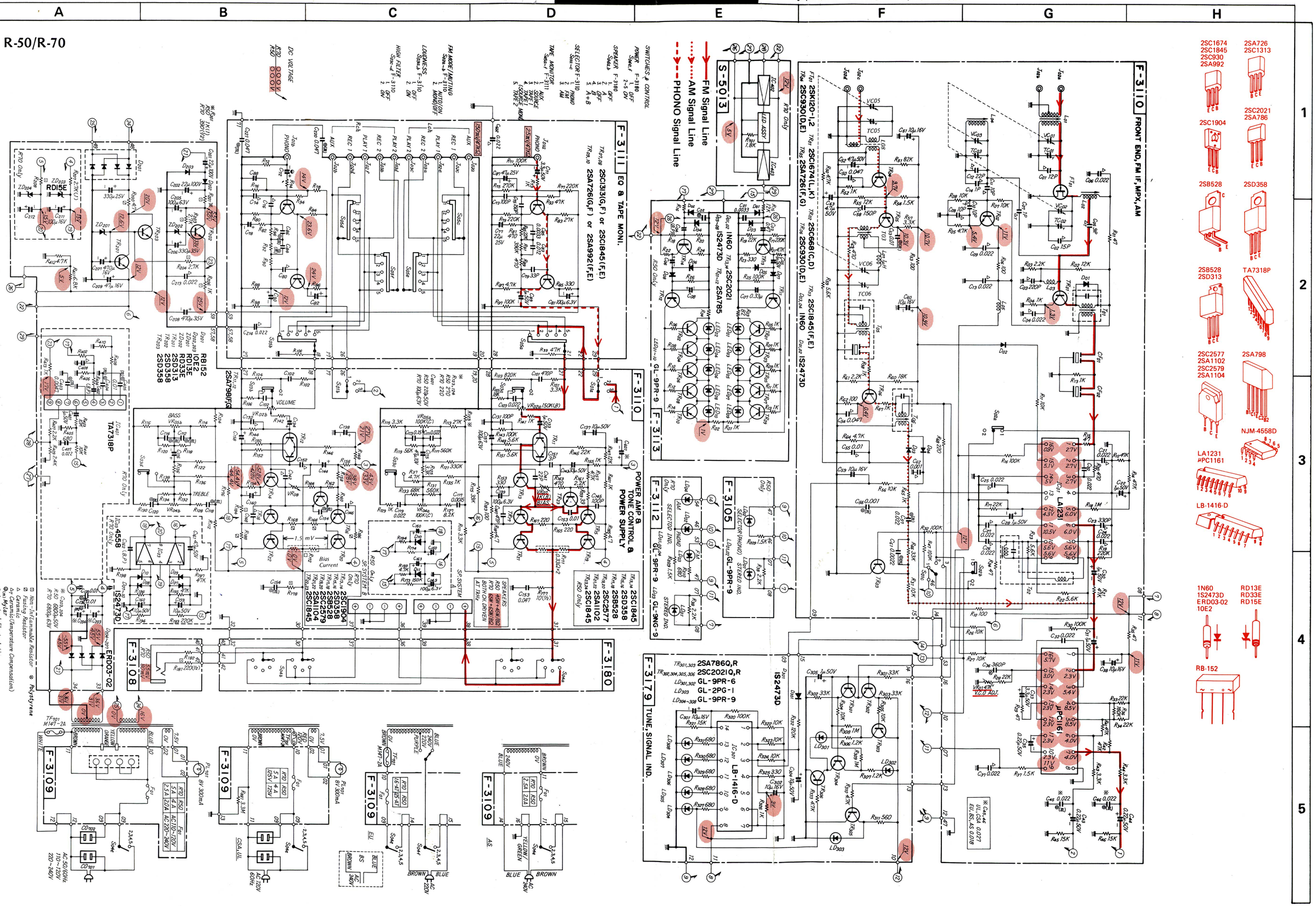

7. THREADING OF DIAL CORD

- If a dial cord is cut off or slips, replace it by following procedures. As this unit uses 0.5 mmϕ cord, please replace it with the same type certainly.
- The length of dial cord is approximately 170 cm (66.9 inch).

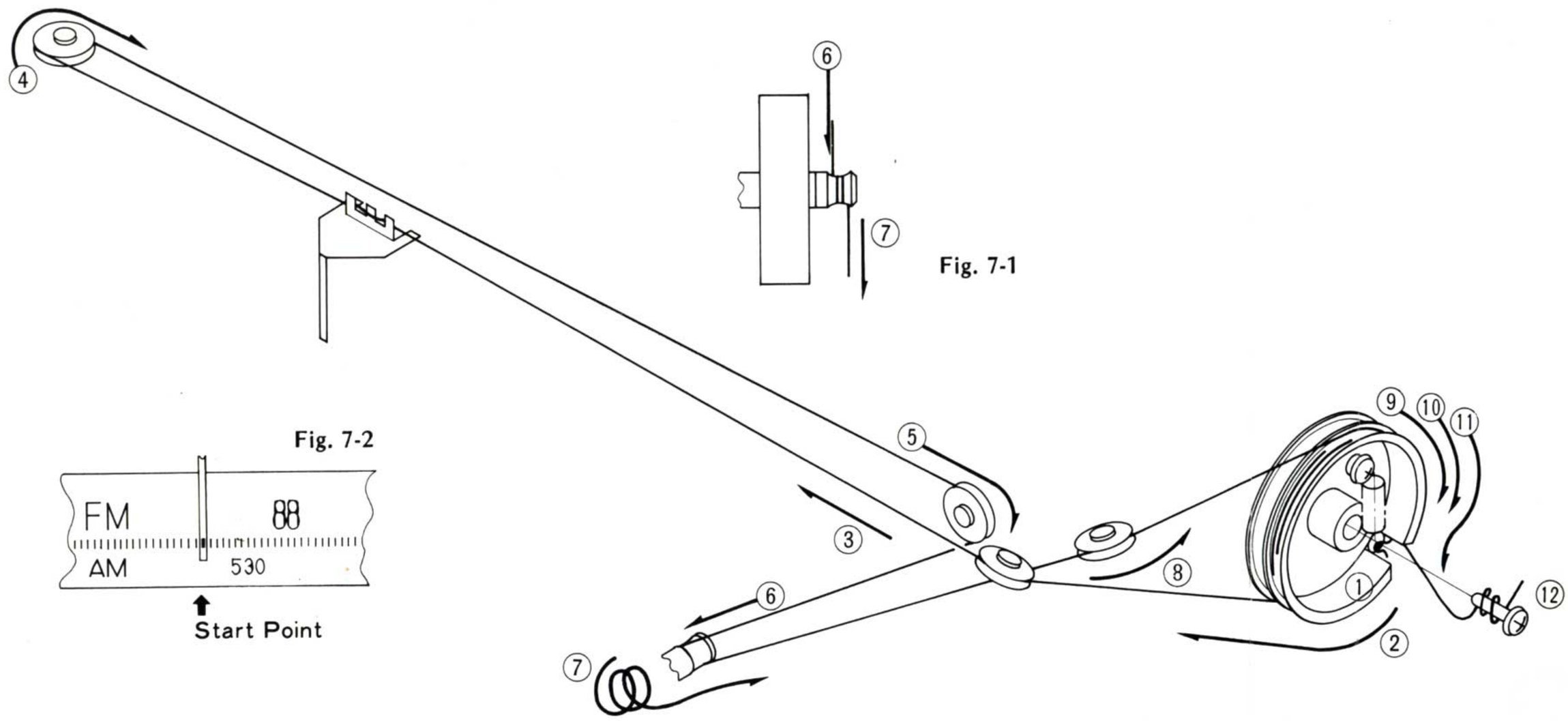

Fig. 7-1

Fig. 7-2

7-1. Replacement of Dial Cord

Thread the dial cord in numerical order from ① to ⑫ as Fig. 7-1.
Close the variable capacitor completely.

Stock No.	Description
60360500	Dial Cord (0.5mmϕ)
61468110	Dial Pulley

7-2. Attachment of Dial Pointer

1. Close the variable capacitor completely.
2. Set the dial pointer to the start-point as Fig. 7-2.

- Confirm that the dial pointer runs smoothly on the dial scale by turning the tuning shaft.

8. MAIN PARTS REPLACEMENT (See Top View on page 8)

8-1. F-3111 Equalizer circuit board<R-50/70>

1) Loosen 6 screws fixing Input terminal board of AUX, TAPE-1, 2 and Phono Input terminal board from rear panel side.
2) Replace Equalizer circuit board.

8-2. Power transistor

1) Loosen Hexagon Head screw E , F (See Top View on page 8) to remove mounting plate for transistor.
2) Replace power transistor.

8-3. Side panel

1) Remove bonnet, bottom plate, then front panel.
2) Loosen 2 screws at front panel side and 2 screws at rear panel side.

9. PACKING LIST

Parts No.	Stock No.	Description
1	91263800	Vinyl Cover
2	90284000	Styrofoam Packing
3	90560800	Carton Case <R-30>
	90560900	Carton Case <R-50>
	90561000	Carton Case <R-70>

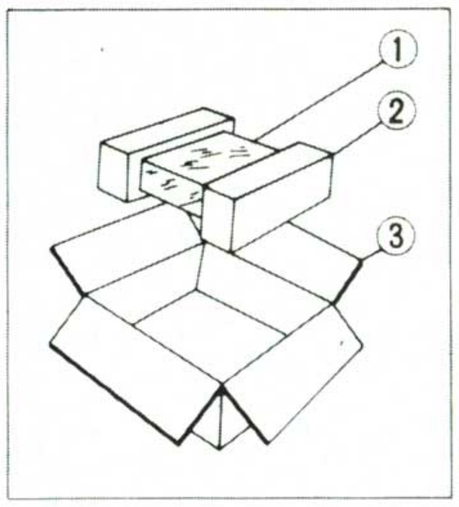

10. ACCESSORY PARTS LIST

Stock No.	Description
92054800	Operating Instructions <R-30>
92054900	Operating Instructions <R-50>
92055000	Operating Instructions <R-70>
38201200	FM Antenna

Sansui

SANSUI ELECTRONICS CORPORATION: 1250 Valley Brook Ave. Lyndhurst, N.J. 07071 U.S.A.
333 West Alondra Blvd. Gardena, California 90247 U.S.A.
3036 Koapaka St. Honolulu, Hawaii 96819 U.S.A.
SANSUI AUDIO EUROPE N.V.: North Trade Bldg (9th floor) Noorderlaan 133-Bus 1,2030 Antwerp, Belgium
SNASUI AUDIO EUROPE S.A.: Arabella center, 6 Frankfurt AM Main, Lyoner Strasse 44-48, West Germany
SANSUI ELECTRIC COMPANY LTD.: 14-1, Izumi 2-chome, Suginamiku, Tokyo 168 Japan PHONE: (03) 323-1111/TELEX: 232-2076

SM138

Printed in Japan (897230M)

www.hifiengine.com