Sansui

SR-4050

TABLE OF CONTENTS

Section	Title	Page
1.	SPECIFICATIONS	6-1
2.	CONTROLS, INDICATORS AND OTHERS	6-2
3.	MAINTENANCE	6-3
3-1.	Changing the capstan	6-3
3-2.	Replacing the cartridge	6-3
3-3.	Oiling	6-4
3-4.	Changing the LINE voltage	6-4
4.	ADJUSTMENT	6-5
4-1.	Adjusting the stylus pressure	6-5
4-2.	Adjusting the inside force canceler	6-5
4-3.	Adjusting the lateral balancer	6-5
4-4.	Adjusting the Auto Lift mechanism	6-5
5.	TROUBLESHOOTING	6-7
5-1.	Turntable not rotating	6-7
5-2.	No sound	6-7
5-3.	Distorted or weak sound	6-7
5-4.	Hum	6-8
5-5.	Rumble (Unusual) sound	6-8
5-6.	Incorrect speed	6-8
5-7.	Improper tracing	6-8
5-8.	Defective Auto Lift and Auto Stop	6-8
6.	EXPLODED VIEW & PARTS LIST	6-11
6-1.	Exploded view (1) and parts list	6-12
6-2.	Exploded view (2) and parts list	6-15
6-3.	Exploded view (3) and parts list	6-16
6-4.	Exploded view (4) and parts list	6-19
6-5.	Packing and accessories list	6-20
6-6.	Auto Lift circuit board	6-21
7.	OPERATION OF AUTO LIFT AND STOP MECHANISM	6-23
8.	WIRING DIAGRAM	6-25

1. SPECIFICATION

Type:	2-speed, belt-driven turntable with Auto Lift, Auto Stop
Rated speeds:	$33^{1}/_{3}$, 45 rpm
Motor:	4-pole hysteresis synchronous
Turntable:	Aluminum alloy die-cast, 300 mm ($11^{13}/_{16}$"), 1.6 kg (3.5 lbs)
Tonearm:	Static-balanced tubular with inside force canceler, lateral balance weight
Arm length:	230 mm ($9^{3}/_{64}$")
Overhang:	15 mm ($^{19}/_{32}$")
Tracking error:	Less than ± 1.5°
Cartridge:	Induced magnet type (IM type)
Stylus:	0.5 mil diamond
Stylus compliance:	7×10^{-6} cm/dyne
Load impedance:	50 kΩ
S/N ratio:	Better than 45 dB
Wow and Flutter:	Less than 0.06 %
Frequency response:	20 ~ 20,000 Hz
Output voltage:	5 mV
Crosstalk:	Better than 25 dB at 1 kHz
Stylus pressure:	2 grams
Dust cover:	Smoked acrylic dust cover
Cabinet:	Walnut, open-pore finished
Power source:	100 V, 115 V, 130 V, 200 V, 230 V and 250 V, 50/60 Hz
Dimensions:	Width 505 mm ($19^{7}/_{8}$"), depth 370 mm ($14^{9}/_{16}$"), height 198 mm ($7^{13}/_{16}$")
Weight:	12.0 kg (26.5 lbs)

※ Manufacturer reserves a right to change design and/or specifications without notice for purpose of improvement.

2. CONTROLS, INDICATORS AND OTHERS

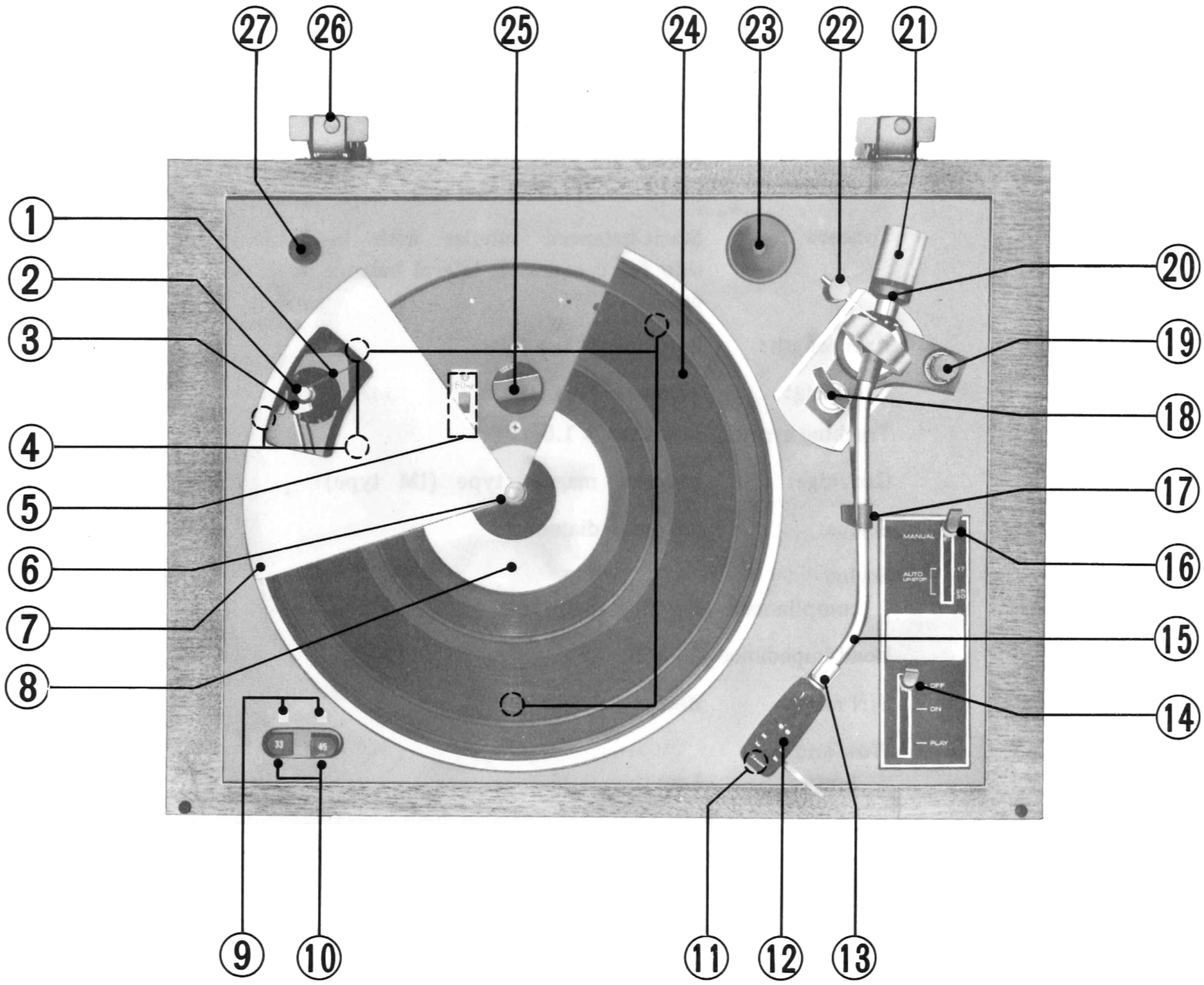

1	Belt	10	Speed selector switch	19	Inside force canceler
2	Capstan	11	Cartridge (Stylus)	20	Stylus pressure scale
3	Belt guide	12	Shell	21	Main weight
4	Shipping bolts	13	Locking nut	22	Lateral weight
5	Frequency selector switch	14	Control lever	23	45 rpm adaptor
6	Turntable spindle	15	Tonearm	24	Turntable rubber mat
7	Turntable (Platter)	16	Selector lever	25	Voltage selector
8	Turntable ring	17	Arm rest	26	Hinge
9	Speed indicator	18	Arm lifter	27	Shell stand

3. MAINTENANCE

3-1. Changing the capstan

The SR-4050's power source frequency has been properly adjusted for the area. If the turntable is brought to the country or area where electrical cycles change from 50 to 60 Hz or vice versa, an adjustment of the turntable is necessary as follows.

1. Remove the turntable (platter) and belt.
2. Loosen the setscrew of the capstan and pull the capstan up.
3. Attach a proper capstan (the thicker one is for 50 Hz).
4. Adjust the height of the capstan so that the belt moves smoothly while changing the turntable speed from $33^1/_3$ to 45 rpm or vice versa, then tighten the setscrew of the capstan securely.
5. At the same time, set the frequency selector switch for the new frequency by sliding.

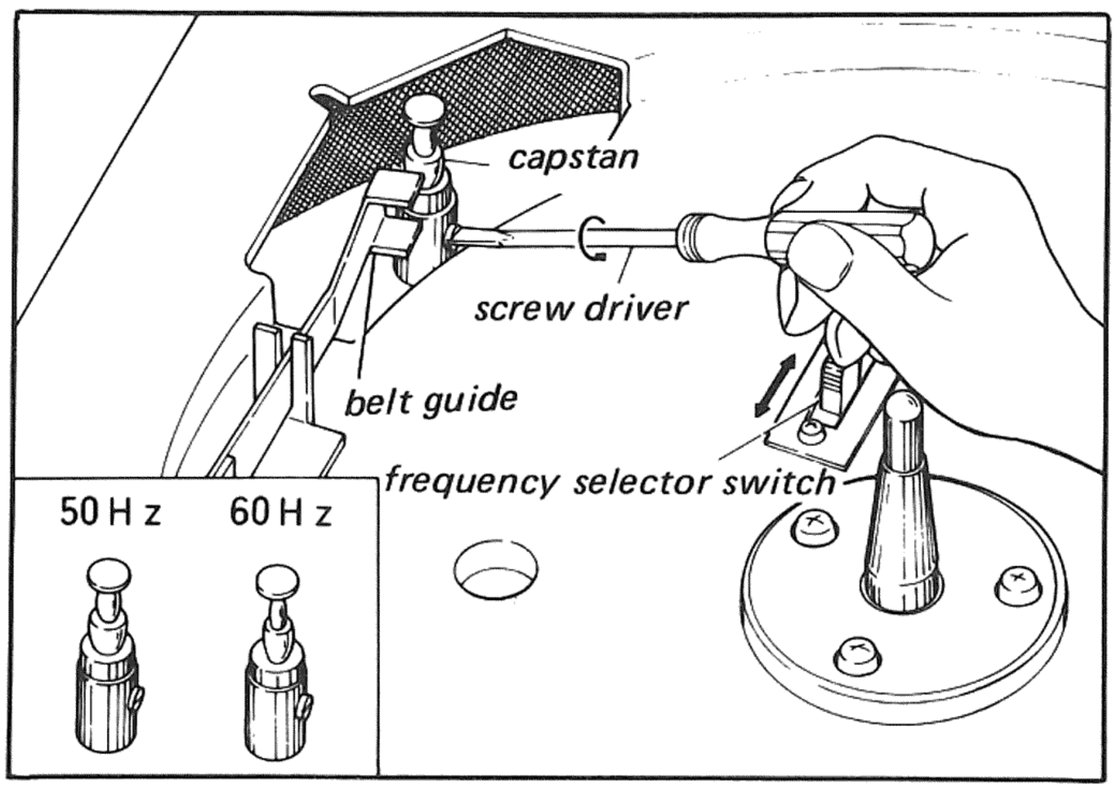

Fig. 3-1

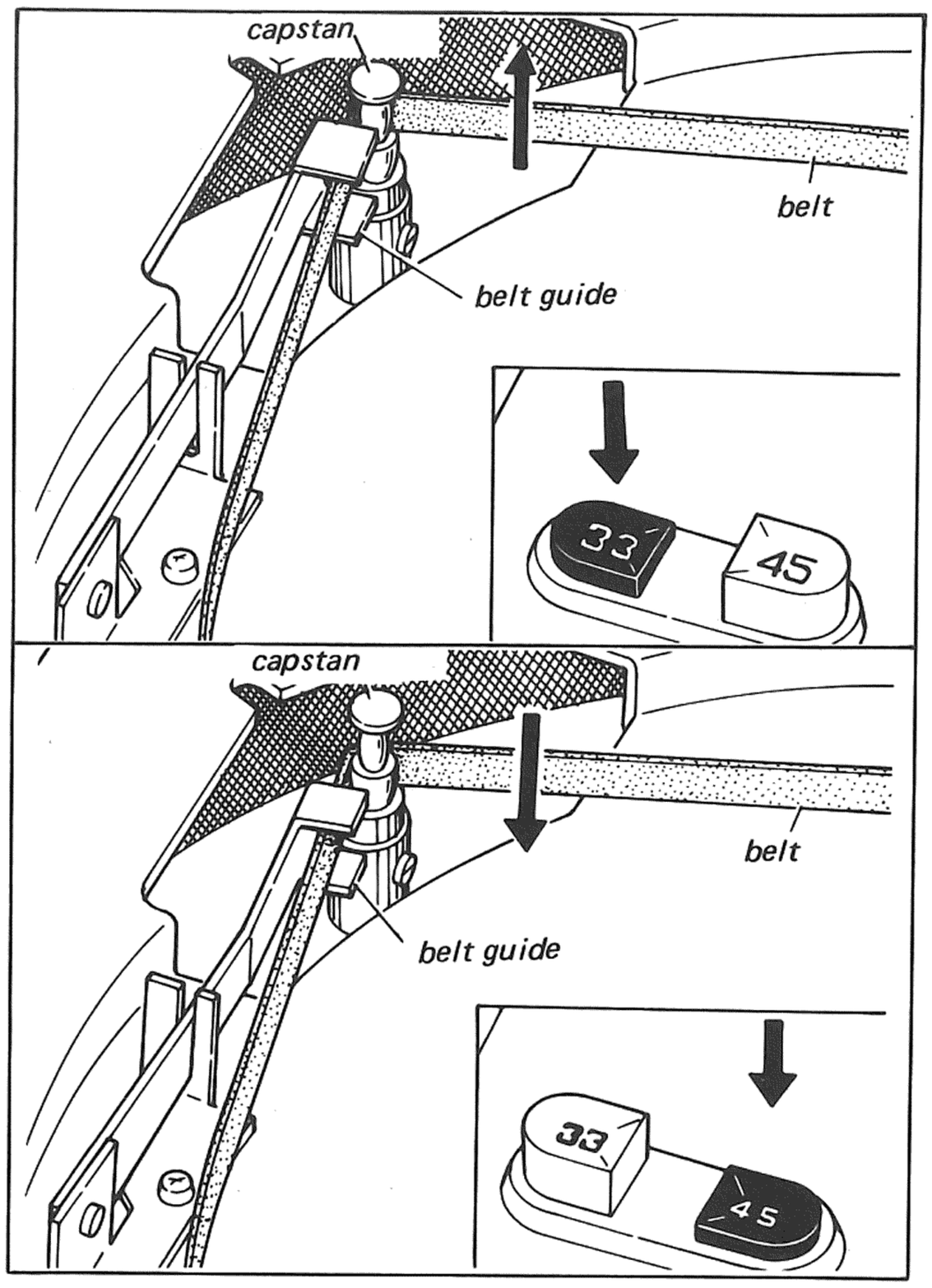

Fig. 3-2

3-2. Replacing the cartridge

1. Turn the locking nut counterclockwise and pull the shell out.
2. Remove the cartridge by loosening the nuts and disconnecting the leads.
3. Attach the cartridge and connect the leads in place correctly.
4. After replacement, adjust the stylus pressure again. (See page 6-5, 4-1. Adjusting the stylus pressure.)

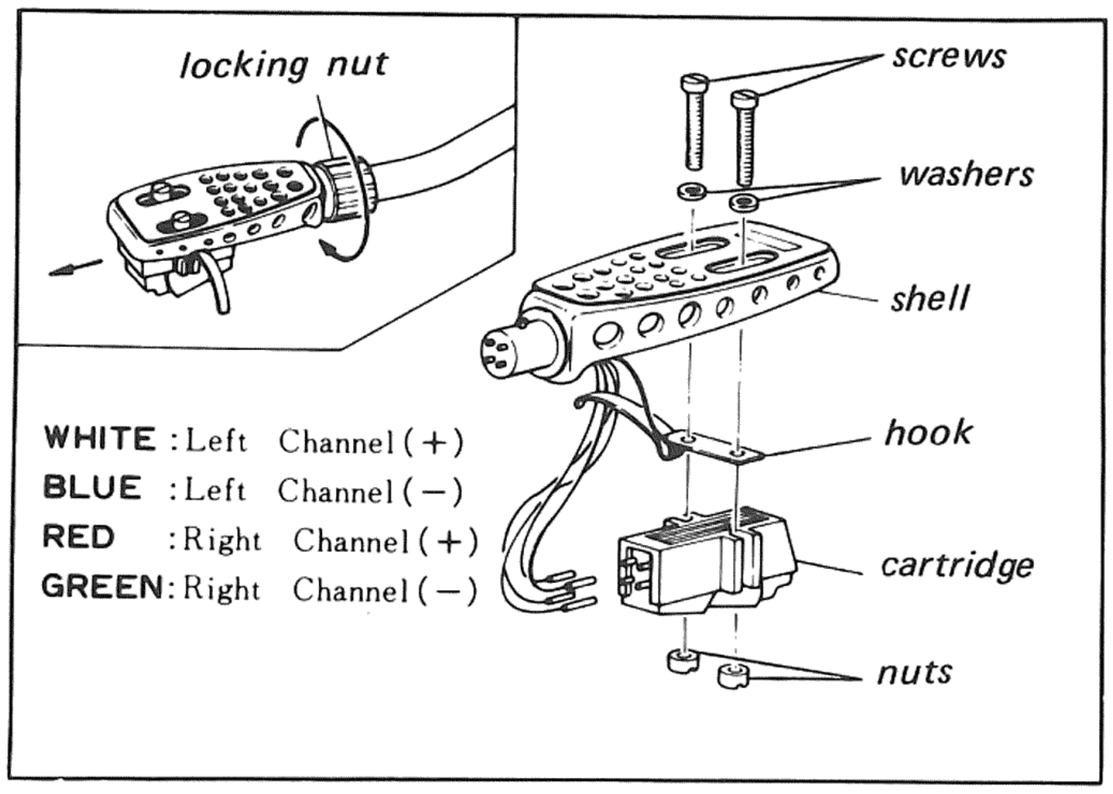

Fig. 3-3

3-3. Oiling

Although the need for oiling depends on usage, oiling should be preformed once a year (every 1,000 hours of operations).

1. Motor
   Remove the turntable (platter) and apply a few drops of oil. Use only the oil attached with the turntable. Be careful that the oil does not stain the belt or the capstan.

2. Turntable spindle
   1) Remove the turntable spindle ass'y as Fig. 3-5.

   2) Loosen the bearing cap, pull the spindle up and apply a few drops of oil.

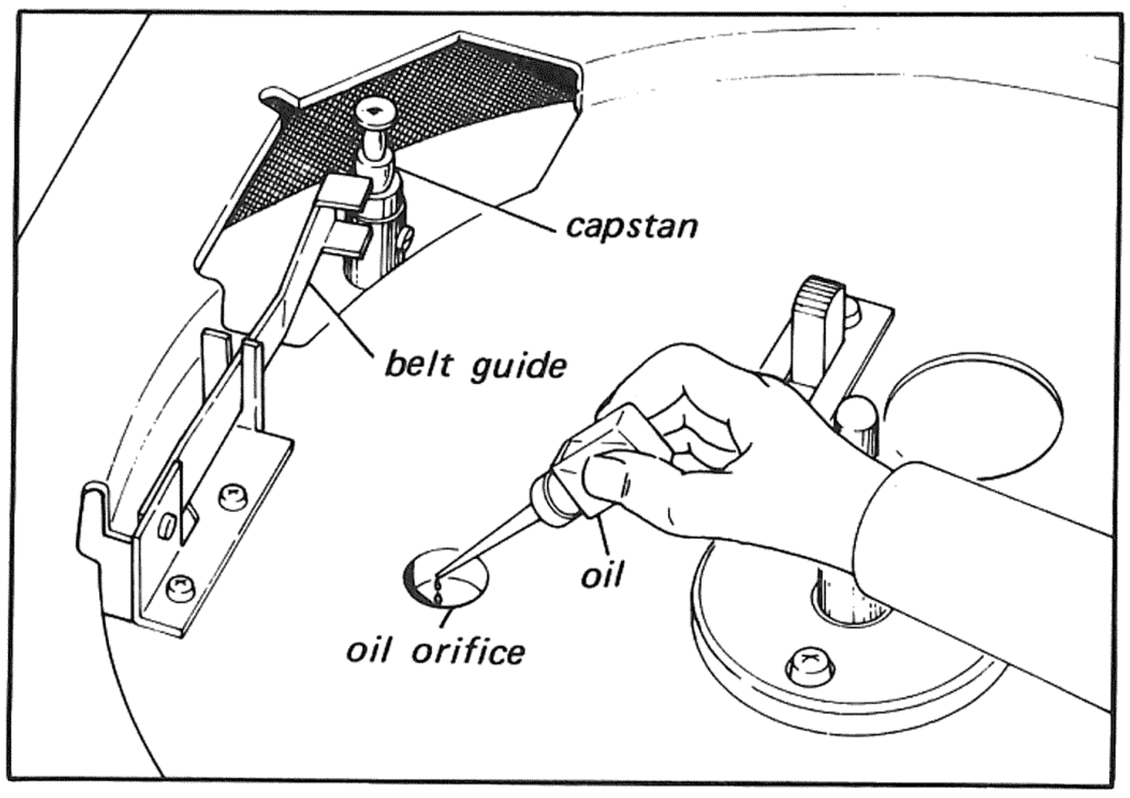

Fig. 3-4

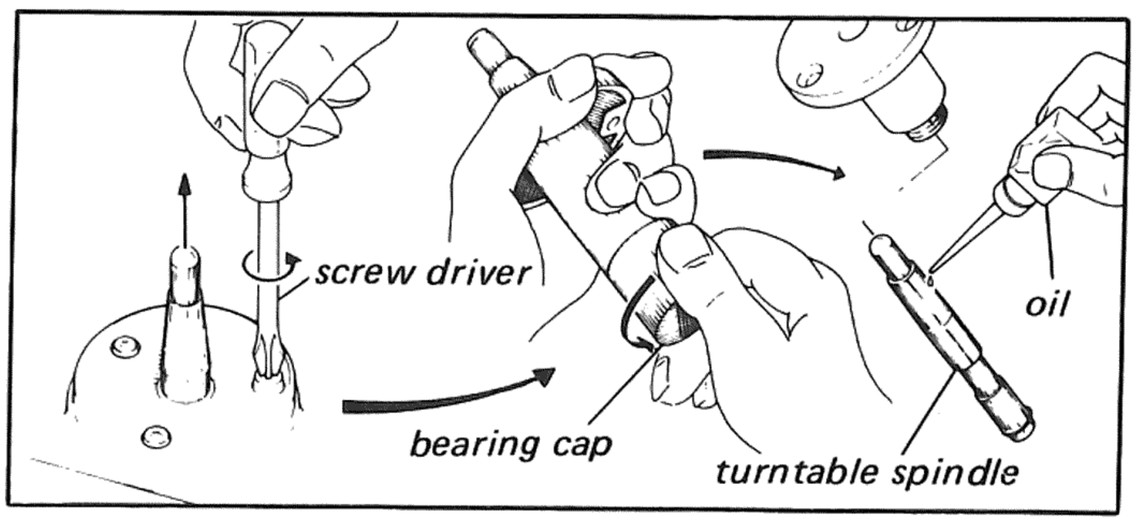

Fig. 3-5

3-4. Changing the LINE voltage

The SR-4050 can be used at six different voltages: 100 V, 115 V, 130 V, 200 V, 230 V and 250 V. Be careful not to switch to the wrong position.

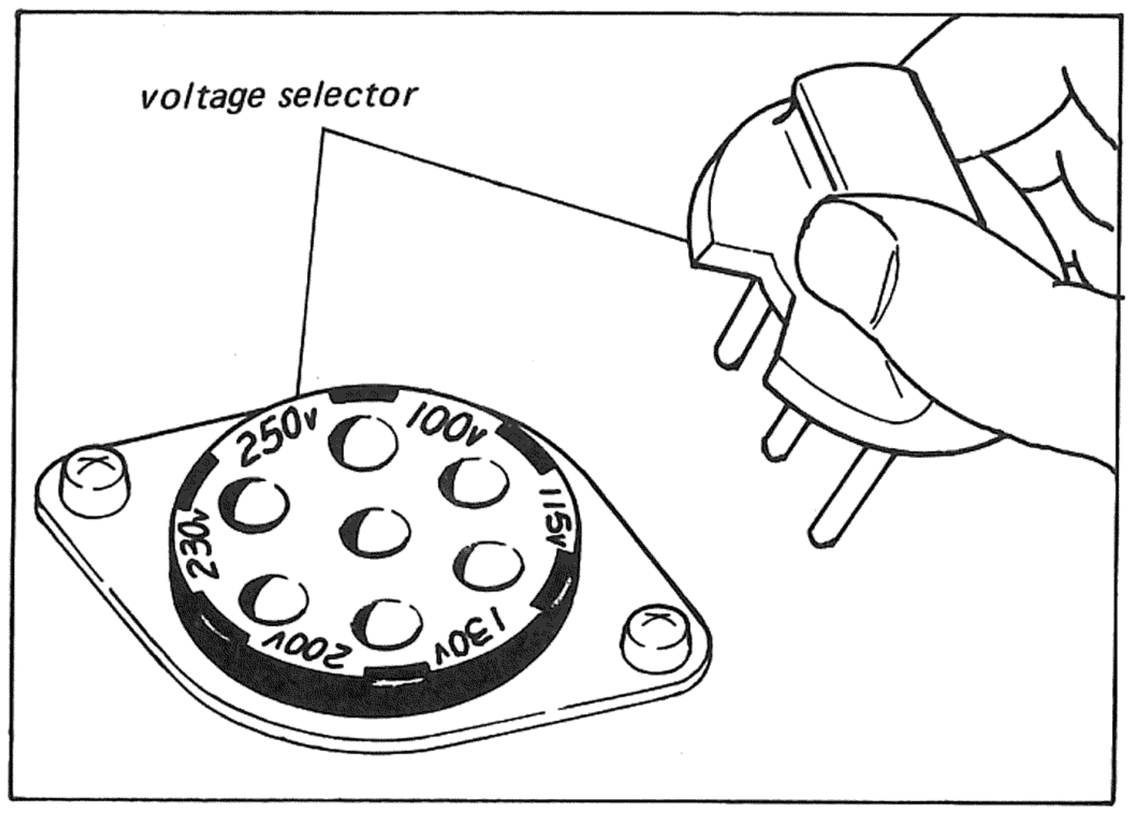

Fig. 3-6

4. ADJUSTMENT

4-1. Adjusting the stylus pressure

1. Remove the stylus cover from the cartridge and set the control lever to PLAY.
2. Remove the tonearm from its rest and move the main weight back and forth until the tonearm balances.
3. Move the stylus pressure scale only so that the "O" mark on it coincides with the marker on the weight shaft.
4. By turning the main weight counterclockwise (as viewed from the front), position it so that the number (specified stylus pressure of the cartridge used) on the stylus pressure scale coincides with the stylus pressure.

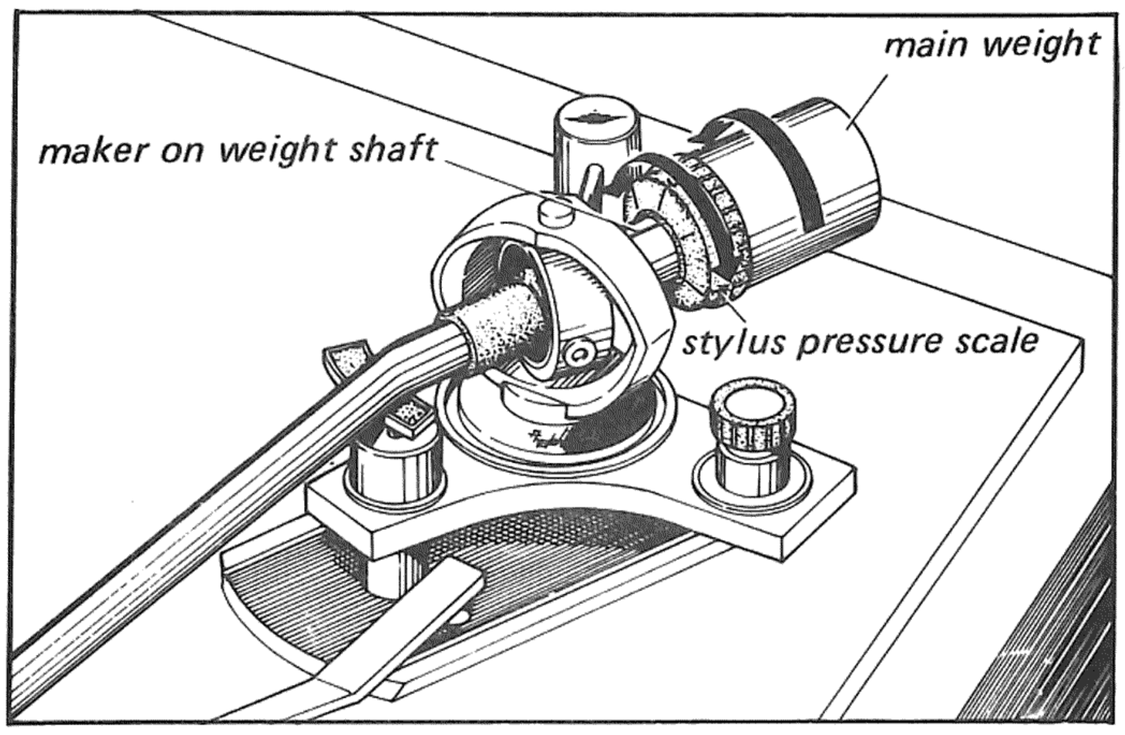

Fig. 4-1

4-2. Adjusting the inside force canceler

Adjust the built-in inside force canceler so that the number on it coindes with the stylus pressure. Each notch on the built-in inside force canceler represents 0.5 gram. To turn the built-in inside force canceler counterclockwise makes outside force stronger.

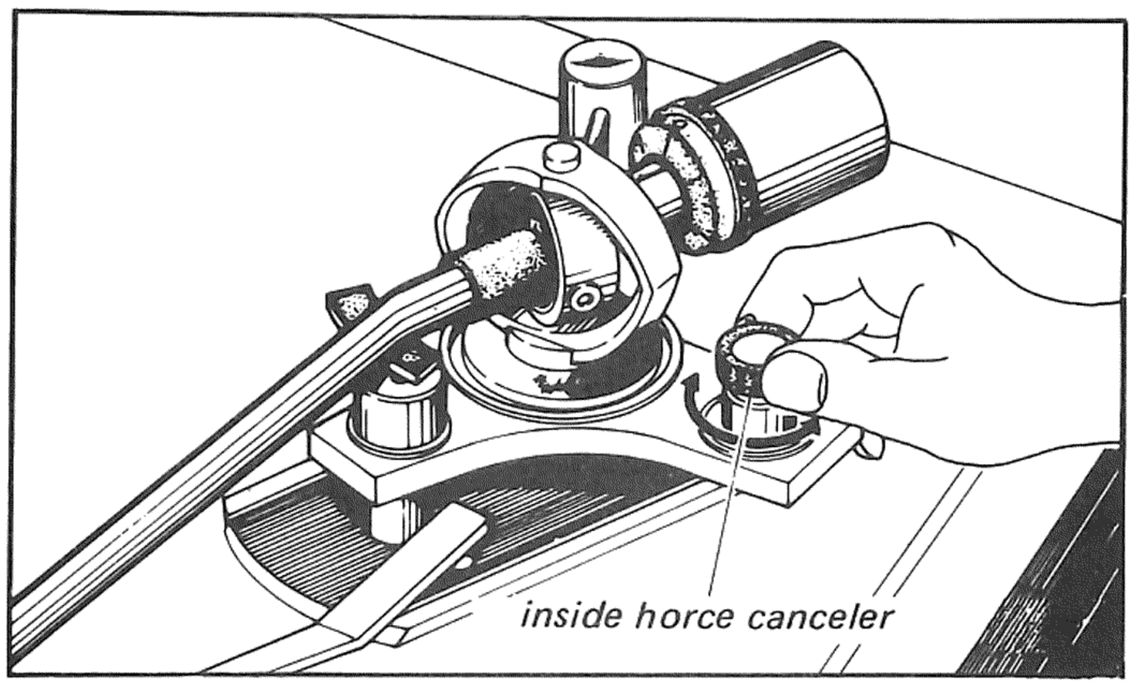

Fig. 4-2

4-3. Adjusting the lateral balancer

1. Cut the AC power off.
2. Balance the tonearm. (See 4-1. Adjusting the stylus pressure.)
3. Move the lateral weight until the tonearm stops at any position as it is placed, while raising the rear bottom edge (hinged side) of the SR-4050 about four inch high.
4. Lateral balance is pre-adjusted for the attached cartridge.

4-4. Adjusting the Auto Lift mechanism

1. Check timing of the Auto Lift (leading or lagging).
2. Adjust the adjusting screw through the hole by the screwdriver as Fig. 4-3. To turn the screw clockwise is for leading and counterclockwise is for lagging. After adjustment, check its operation a few times.

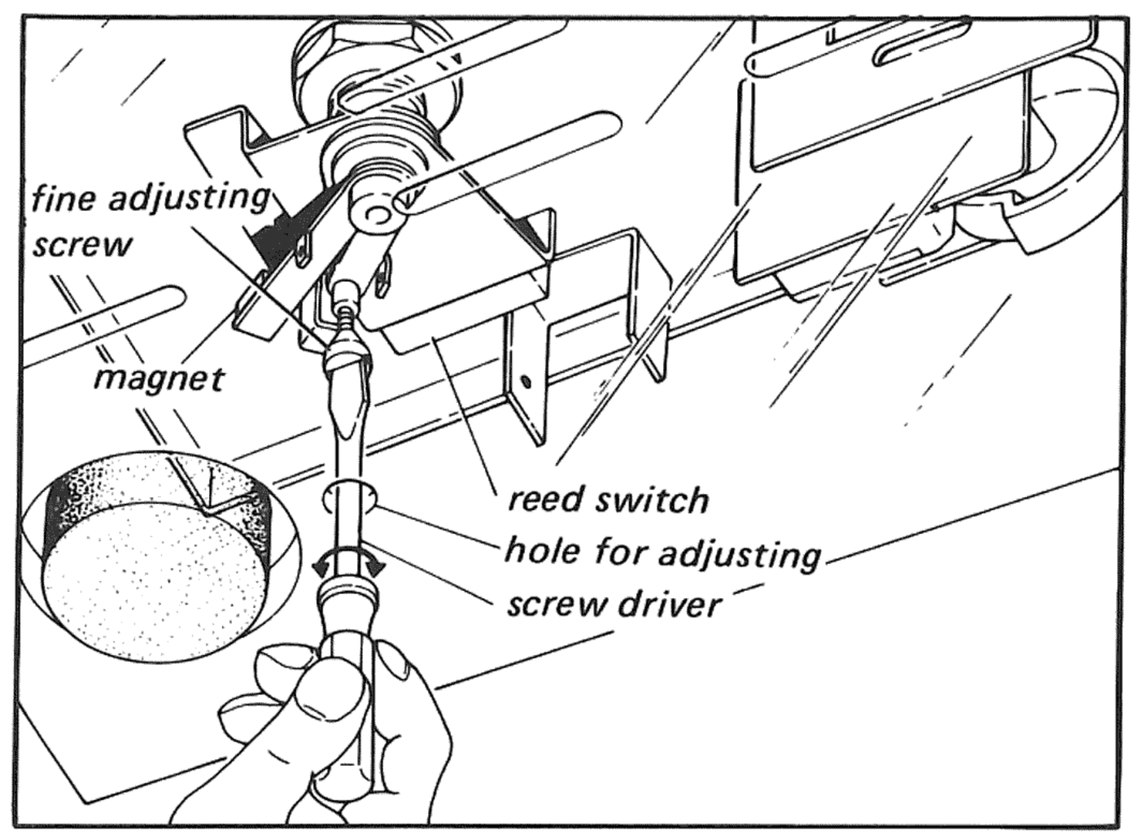

Fig. 4-3

5. TROUBLESHOOTING

Symptom – 1	Symptom – 2	Cause & What to Do
5-1. Turntable not rotating	1. Turntable not rotating	1. Belt off
		2. Broken or stretched belt
		3. Loose capstan screw (Capstan racing)
		4. Burn out turntable spindle
	2. Motor not rotating	5. Defective control lever switch (Micro switch AM-4100)
		6. Power fuse, 1A, blown out
		7. Defective motor
5-2. No sound	3. Due to turntable	8. Defective cartridge (SC-34)
		9. Cartridge leads open
		10. Imperfect contact of tonearm and shell
		11. Improper connection (when replaced) or imperfect contact of cartridge leads
		12. Imperfect contact of slide switch on muting circuit
	4. Other than turntable	13. Improper connection to amplifier
		14. Improper operation of amplifier (TAPE MONITOR switch → ON)
5-3. Distorted or weak sound	5. Due to turntable	15. Improper setting of stylus
		16. Improper stylus pressure (See page 6-5, 4-1. Adjusting the stylus pressure)
		17. Worn out stylus
		18. Dusty stylus
		19. Loose tonearm
	6. Other than turntable	20. Defective record cutting
		21. Improper operation of amplifier (Selector switch, etc.)

To page 6-8

Symptom – 1	Symptom – 2	Cause & What to Do
		From page 6-7
		22. Improper connection of output cords
5-4. Hum	7. Due to turntable	23. Imperfect contact of tonearm and shell
		24. Ground leads, tonearm and cartridge, open
		25. Imperfect contact of slide switch on muting circuit
	8. Other than turntable	26. Defective output cord
		27. Output cords and power cord crossing
		28. Near magnetic flux
5-5. Rumble (Unusual) sound	9. Due to motor	29. Defective motor
		30. Shipping bolts not unscrewed
	10. Other than motor	31. Defective turntable spindle
		32. Dirty capstan
5-6. Incorrect speed	11. Rotary mechanism	33. Improper capstan
		34. Improper setting of capstan
		35. Dirty capstan
	12. Transmission mechanism	36. Stretched belt
5-7. Improper tracing	13. Due to cartridge	37. Dusty stylus
		38. Defective stylus
	14. Due to mechanism	39. Defective tonearm
5-8. Defective Auto Lift and Auto Stop	15. Both not operative	40. Defective reed switch
		41. Defective diode (FR2-02)
		42. Defective capacitor (330 μF, 16 V)
To page 6-9	To page 6-9	

Symptom – 1	Symptom – 2	Cause & What to Do
From page 6-8	From page 6-8	
		43. Defective relay (small)
		44. Defective diode (FR2-10)
		45. Defective plunger
		46. Defective capacitor (470 μF, 200 WV)
		47. Loose adjustment of Auto Lift mechanism
16. Auto Lift not operative		48. Defective arm lifter
17. Auto Stop not operative		49. Defective selector lever switch (Micro switch AM-4100)

6. EXPLODED VIEW & PARTS LIST

Hardware Nomenclature

	Name	*Abbreviation*	*Type*
SCREW	Pan Head Screw	**P**	
	Binding Head Screw	**B**	
	Round Head Screw	**R**	
	Flat Countersunk Head Screw	**F**	
	Oval Countersunk Head Screw	**O**	
	Truss Head Screw	**T**	
	Flat Fillister Screw	**FS**	
	Oval Countersunk Wood Screw	**OC**	
	Flat Countersunk Wood Screw	**FC**	
	Pan Head Tapping Screw	**PT**	
SETSCREW	Hex. Socket Setscrew	**S**	
	Slot Type Setscrew	**SS**	
WASHER	Retaining Ring (E washer)	**E**	
	Plane Washer	**P**	
	Spring Washer	**S**	
	Corrugated Washer	**C**	
	Toothed Lock Washer	**TL**	

EXAMPLE FS type Screw, M3 x 6 (BLK)

- (BLK) — Color
- 6 — Length in mm (L)
- M3 — Diameter in mm (D)
- FS type Screw — Type & Name

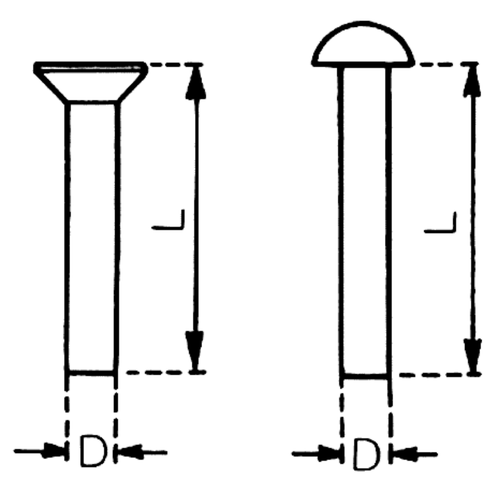

All screws conform to ISO standards, unless otherwise noted.

6-1. Exploded view (1) and parts list (See Fig. 6-1)

※ Use the stock number for parts order. If the stock number is unknown, use the model's name, fig. number, parts numebr and parts name correctly.

Parts No.	Stock No.	Description
1	5100063	B Type Screw, M4 x 10
2	5100063	B Type Screw, M4 x 10
3	6922030	Lock Plate
4	5100063	B Type Screw, M4 x 10
5	5100063	B Type Screw, M4 x 10
6	6922030	Lock Plate
7	5062020	Dust Cover
8	5392050	Ring, turntable
9	5502110	Rubber Mat, turntable
10	6112050	Turntable
11	6032050	Belt
12	5140020	OC Type Screw, M2.7 x 20
13	5120041	P Type Washer, 3 x 8 x 0.5
14	5140020	OC Type Screw, M2.7 x 20
15	5120041	P Type Washer, 3 x 8 x 0.5
16	5140020	OC Type Screw, M2.7 x 20
17	5120041	P Type Washer, 3 x 8 x 0.5
18	5140020	OC Type Screw, M2.7 x 20
19	5120041	P Type Washer, 3 x 8 x 0.5
20	5140020	OC Type Screw, M2.7 x 20
21	5120041	P Type Washer, 3 x 8 x 0.5
22	5140020	OC Type Screw, M2.7 x 20
23	5120041	P Type Washer, 3 x 8 x 0.5
24	5140020	OC Type Screw, M2.7 x 20
25	5120041	P Type Washer, 3 x 8 x 0.5
26	5140020	OC Type Screw, M2.7 x 20
27	5120041	P Type Washer, 3 x 8 x 0.5
28	5140020	OC Type Screw, M2.7 x 20
29	5120041	P Type Washer, 3 x 8 x 0.5
30	5140020	OC Type Screw, M2.7 x 20
31	5120041	P Type Washer, 3 x 8 x 0.5
32	5140020	OC Type Screw, M2.7 x 20
33	5120041	P Type Washer, 3 x 8 x 0.5
34	5140020	OC Type Screw, M2.7 x 20
35	5120041	P Type Washer, 3 x 8 x 0.5
36	5140020	OC Type Screw, M2.7 x 20
37	5120041	P Type Washer, 3 x 8 x 0.5
38	5140020	OC Type Screw, M2.7 x 20
39	5120041	P Type Washer, 3 x 8 x 0.5
40	5140020	OC Type Screw, M2.7 x 20
41	5120041	P Type Washer, 3 x 8 x 0.5
42	6922030	Hinge
43	5140020	OC Type Screw, M2.7 x 20
44	5120041	P Type Washer, 3 x 8 x 0.5
45	5140020	OC Type Screw, M2.7 x 20
46	5120041	P Type Washer, 3 x 8 x 0.5
47	5140020	OC Type Screw, M2.7 x 20
48	5120041	P Type Washer, 3 x 8 x 0.5
49	5140020	OC Type Screw, M2.7 x 20
50	5120041	P Type Washer, 3 x 8 x 0.5
51	6922030	Hinge
52	5140020	OC Type Screw, M2.7 x 20
53	5120041	P Type Washer, 3 x 8 x 0.5
54	5140020	OC Type Screw, M2.7 x 20
55	5120041	P Type Washer, 3 x 8 x 0.5
56	5502030	Insulator
57	5502030	Insulator
58	5502030	Insulator
59	5502030	Insulator
60	5732070	Bottom Cover
61		AC Cord
62		Output Cords
63	5103069	P Type Screw, M4 x 25
64	5121360	S Type Washer, 4 x 1.4 x 1.0
65		P Type Washer, 4 x 18 x 1.6
66	5103069	P Type Screw, M4 x 25
67	5121360	S Type Washer, 4 x 1.4 x 1.0
68		P Type Washer, 4 x 18 x 1.6
69	5103069	P Type Screw, M4 x 25
70	5121360	S Type Washer, 4 x 1.4 x 1.0
71		P Type Washer, 4 x 18 x 1.6
72	5103069	P Type Screw, M4 x 25
73	5121360	S Type Washer, 4 x 1.4 x 1.0
74		P Type Washer, 4 x 18 x 1.6
75	5502020	Cushion
76	5502020	Cushion
77	5332020	Badge
78	5732060	Cabinet

Fig. 6—1

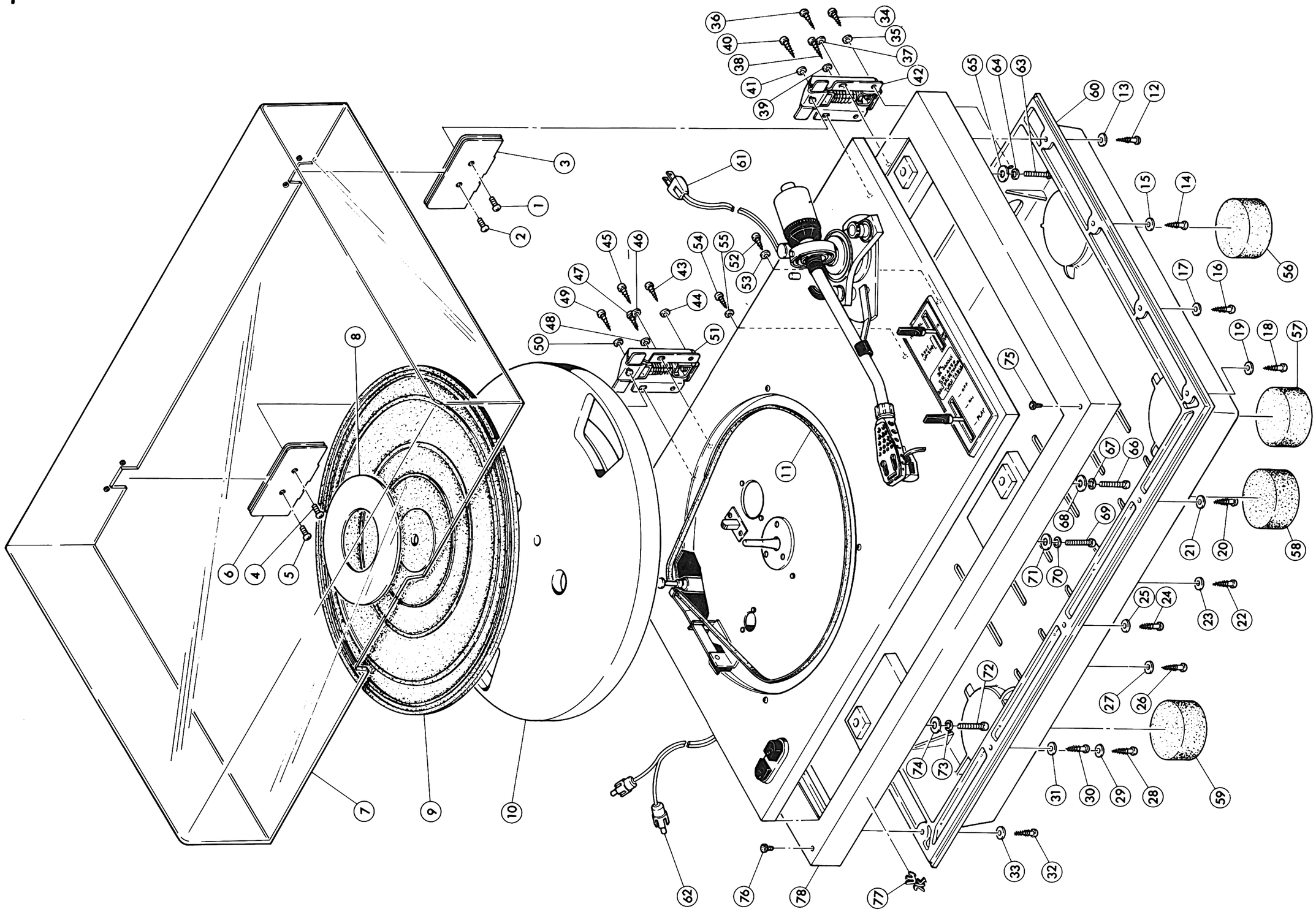
1
2
3
4
5
6
7
8
9
10
11
12
13
14
15
16
17
18
19
20
21
22
23
24
25
26
27
28
29
30
31
32
33
34
35
36
37
38
39
40
41
42
43
44
45
46
47
48
49
50
51
52
53
54
55
56
57
58
59
60
61
62
63
64
65
66
67
68
69
70
71
72
73
74
75
76
77
78

Fig. 6—2

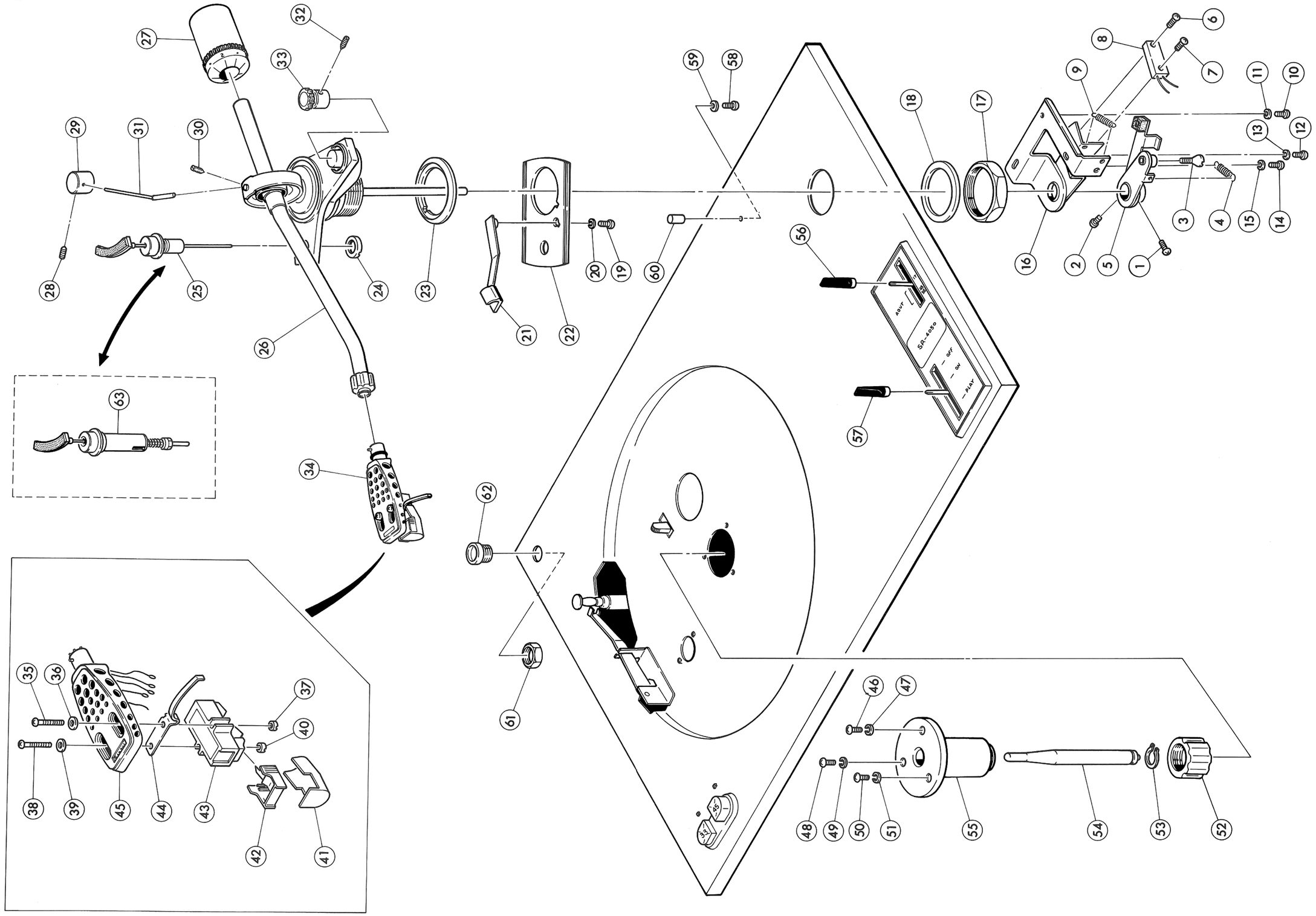

6-2. Exploded view (2) and parts list (See Fig. 6-2)

※ Use the stock number for parts order. If the stock number is unknown, use the model's name, fig. number, parts number and parts name correctly.

Parts No.	Stock No.	Description
1	5103044	P Type Screw, M3 x 8
2	5103044	P Type Screw, M3 x 8
3	5162100	Adjusting Screw
4		Spring, PU plate
5	7052140	PU Plate Ass'y
6	5103046	P Type Screw, M3 x 12
7	5103046	P Type Screw, M3 x 12
8		Reed Switch
9		Spring, auto base (4)
10	5103043	P Type Screw, M3 x 6
11	5121340	S Type Washer, 3 x 1.1 x 0.7
12	5103043	P Type Screw, M3 x 6
13	5121340	S Type Washer, 3 x 1.1 x 0.7
14	5103043	P Type Screw, M3 x 6
15	5121340	S Type Washer, 3 x 1.1 x 0.7
16		Auto Base (4) Ass'y
	7092060	Tonearm Ass'y
17		Hex. Nut, M23
18		Washer, 23 ϕ
19	5103043	P Type Screw, M3 x 6
20	5121340	S Type Washer, 3 x 1.1 x 0.7
21	6622040	Rest, arm
22		Plate, arm base
23		Stand Base
24		Nut, arm lifter
25	7082050	Arm Lifter Ass'y
26		Tonearm
27	6912110	Main Weight Ass'y
28		SS Type Screw, M2.6 x 4
29	6912100	Weight, lateral
30		SS Type Screw, M2 x 2
31	6202010	Cursor, bias
32		SS Type Screw, M3 x 3

Parts No.	Stock No.	Description
33	5312040	Knob, inside force canceler
34		Shell (With cartridge)
35		FS Type Screw, M2.6 x 15 (BLK)
36		Washer, rigid polyvinyle chloride
37		Nut, M2.6
38		FS Type Screw, M2.6 x 15 (BLK)
39		Washer, rigid polyvinyle chloride
40		Nut, M2.6
41		Cover, stylus
42	4940050	Stylus (SN-34)
43	4310050	Cartridge (SC-34)
44		Hook
45	6642030	Shell
46	5103062	P Type Screw, M4 x 8
47	5121360	S Type Washer, 4 x 1.4 x 1.0
48	5103062	P Type Screw, M4 x 8
49	5121360	S Type Washer, 4 x 1.4 x 1.0
50	5103062	P Type Screw, M4 x 8
51	5121360	S Type Washer, 4 x 1.4 x 1.0
	7032050	Turntable Spindle Ass'y
52		Cap, bearing
53		C Type Ring, 9 ϕ
54		Spindle, turntable
55		Bearing, turntable
56	5312050	Cap, selector lever
57	5312050	Cap, control lever
58	5103043	P Type Screw, M3 x 6
59	5121340	S Type Washer, 3 x 1.1 x 0.7
60		Stay, adaptor
61		Hex. Nut, M14
62		Stay, cartridge
63	7082060	Arm Lifter Ass'y (New Type)

6-3. Exploded view (3) and parts list (See Fig. 6-3)

※ Use the stock number for parts order. If the stock number is unknown, use the model's name, fig. number, parts number and parts name correctly.

Parts No.	Stock No.	Description
1	5103069	P Type Screw, M4 x 25
2	5121360	S Type Washer, 4 x 1.4 x 1.0
3	5182010	Cup Washer, M4
4	5232070	Spacer, motor
5	5502150	Rubber Cushion, motor
6	5103069	P Type Screw, M4 x 25
7	5121360	S Type Washer, 4 x 1.4 x 1.0
8	5182010	Cup Washer, M4
9	5232070	Spacer, motor
10	5502150	Rubber Cushion, motor
11	5103069	P Type Screw, M4 x 25
12	5121360	S Type Washer, 4 x 1.4 x 1.0
13	5182010	Cup Washer, M4
14	5232070	Spacer, motor
15	5502150	Rubber Cushion, motor
16	5110361	Hex. Nut, M4 x 7 x 3.2
17	5121360	S Type Washer, 4 x 1.4 x 1.0
18	5110361	Hex. Nut, M4 x 7 x 3.2
19	5121360	S Type Washer, 4 x 1.4 x 1.0
20	5110361	Hex. Nut, M4 x 7 x 3.2
21	5121360	S Type Washer, 4 x 1.4 x 1.0
22	5110361	Hex. Nut, M4 x 7 x 3.2
23	5121360	S Type Washer, 4 x 1.4 x 1.0
24	5242110	Sheet, motor
25		SS Type Screw, M3 x 3
26	6142090	Capstan (50 Hz)
	6142100	Capstan (60 Hz)
27	4320050	Motor
28	5103044	P Type Screw, M3 x 8
29	5121340	S Type Washer, 3 x 1.1 x 0.7
30		Card Clamper
31	5103044	P Type Screw, M3 x 8
32	5121340	S Type Washer, 3 x 1.1 x 0.7
33	5120141	P Type Washer, 3 x 8 x 0.5
34	5103044	P Type Screw, M3 x 8
35	5121340	S Type Washer, 3 x 1.1 x 0.7
36		Cord Clamper
37	5103044	P Type Screw, M3 x 8
38	5121340	S Type Washer 3 x 1.1 x 0.7
39	5120141	P Type Washer, 3 x 8 x 0.5
40	5062060	Case, PC board
41	5103046	P Type Screw, M3 x 12
42	5121340	S Type Washer, 3 x 1.1 x 0.7
43	5232090	Spacer, P. C. B
44	5103046	P Type Screw, M3 x 12
45	5121340	S Type Washer, 3 x 1.1 x 0.7
46	5232090	Spacer, P. C. B.
47	5103046	P Type Screw, M3 x 12
48	5121340	S Type Washer, 3 x 1.1 x 0.7
49	5232090	Spacer, P. C. B
50	5103046	P Type Screw, M4 x 12

Parts No.	Stock No.	Description
51	5121340	S Type Washer, 3 x 1.1 x 0.7
52	5232090	Spacer, P. C. B
53		Printed Circuit Board
54	5103062	P Type Screw, M4 x 8
55	5121360	S Type Washer, 4 x 1.4 x 1.0
56	5103062	P Type Screw, M4 x 8
57	5121360	S Type Washer, 4 x 1.4 x 1.0
58		Power Transformer
59	5103043	P Type Screw, M3 x 6
60	5121340	S Type Washer, 3 x 1.1 x 0.7
61	5103043	P Type Screw, M3 x 6
62	5121340	S Type Washer, 3 x 1.1 x 0.7
63		Voltage Selector
64	5103044	P Type Screw, M3 x 8
65	5121340	S Type Washer, 3 x 1.1 x 0.7
66		P Type Washer, 3 x 15 x 1.0
67		Nylon Cord Clamper
68	5103044	P Type Screw, M3 x 8
69	5121340	S Type Washer, 3 x 1.1 x 0.7
70		P Type Washer, 3 x 15 x 1.0
71		Nylon Cord Clamper
72	5103061	P Type Screw, M4 x 6
73	5121360	S Type Washer, 4 x 1.4 x 1.0
74	5103061	P Type Screw, M4 x 6
75	5121360	S Type Washer, 4 x 1.4 x 1.0
76		MP Capacitor 1.5 μF + 0.6 μF 250V
77	5103044	P Type Screw, M3 x 8
78	5121340	S Type Washer, 3 x 1.1 x 0.7
79	5103044	P Type Screw, M3 x 8
80	5121340	S Type Washer, 3 x 1.1 x 0.7
81		Electrolytic Capacitor, 470 μF 200 V
82	5103043	P Type Screw, M3 x 6
83	5121340	S Type Washer, 3 x 1.1 x 0.7
84	5103043	P Type Screw, M3 x 6
85	5121340	S Type Washer, 3 x 1.1 x 0.7
86	6932030	Oil Cup
87	5103043	P Type Screw, M3 x 6
88	5121340	S Type Washer, 3 x 1.1 x 0.7
89	5103043	P Type Screw, M3 x 6
90	5121340	S Type Washer, 3 x 1.1 x 0.7
91		Name Plate, frequency
92		Slide Switch,
93	5103043	P Type Screw, M3 x 6
94	5121340	S Type Washer, 3 x 1.1 x 0.7
95		Enameld Wirewound Resistor, 100 + 200 Ω 10W
96	2110070	4-Lug Terminal Strip

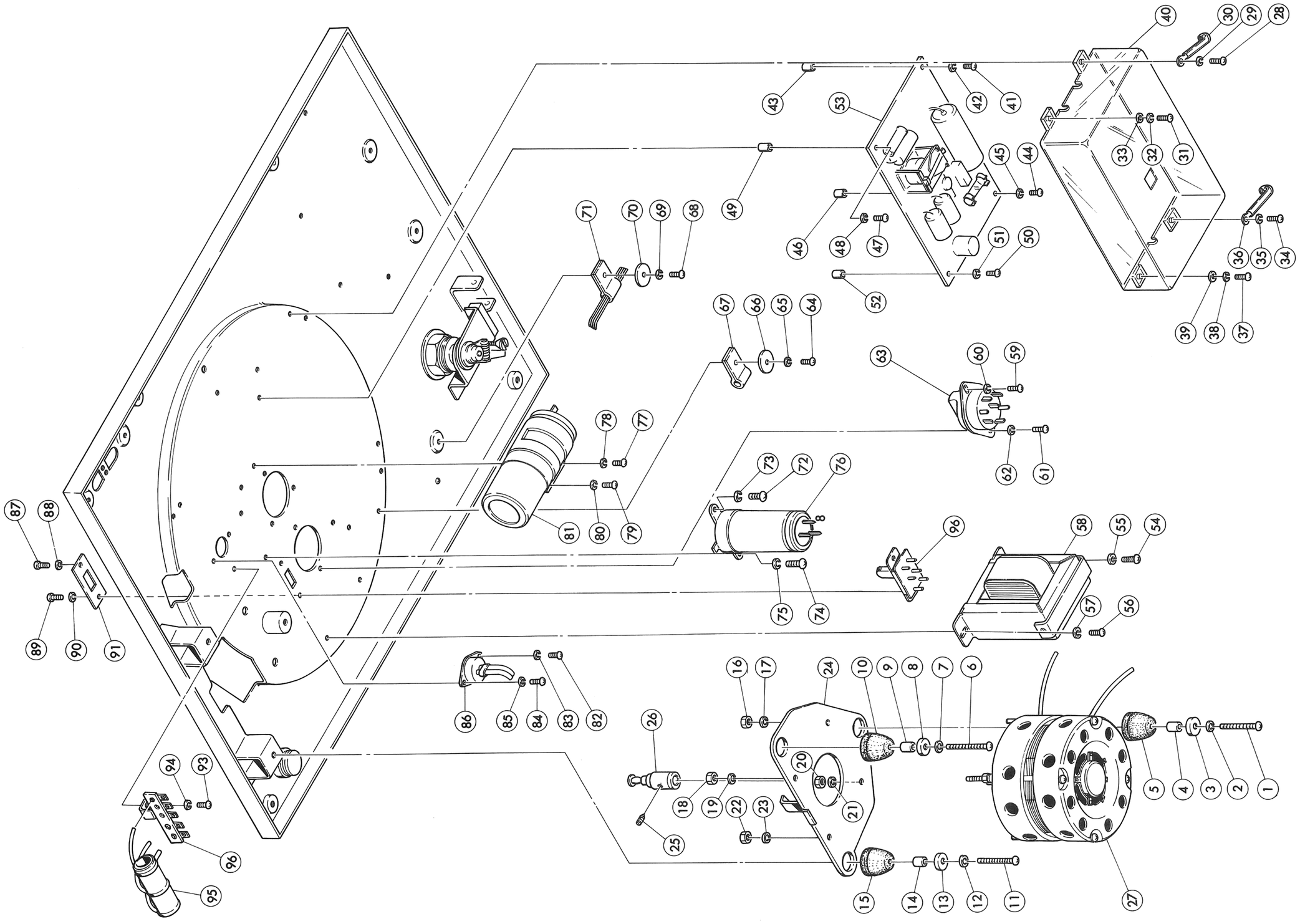
1
2
3
4
5
6
7
8
9
10
11
12
13
14
15
16
17
18
19
20
21
22
23
24
25
26
27
28
29
30
31
32
33
34
35
36
37
38
39
40
41
42
43
44
45
46
47
48
49
50
51
52
53
54
55
56
57
58
59
60
61
62
63
64
65
66
67
68
69
70
71
72
73
74
75
76
77
78
79
80
81
82
83
84
85
86
87
88
89
90
91
93
94
95
96

Fig. 6—4

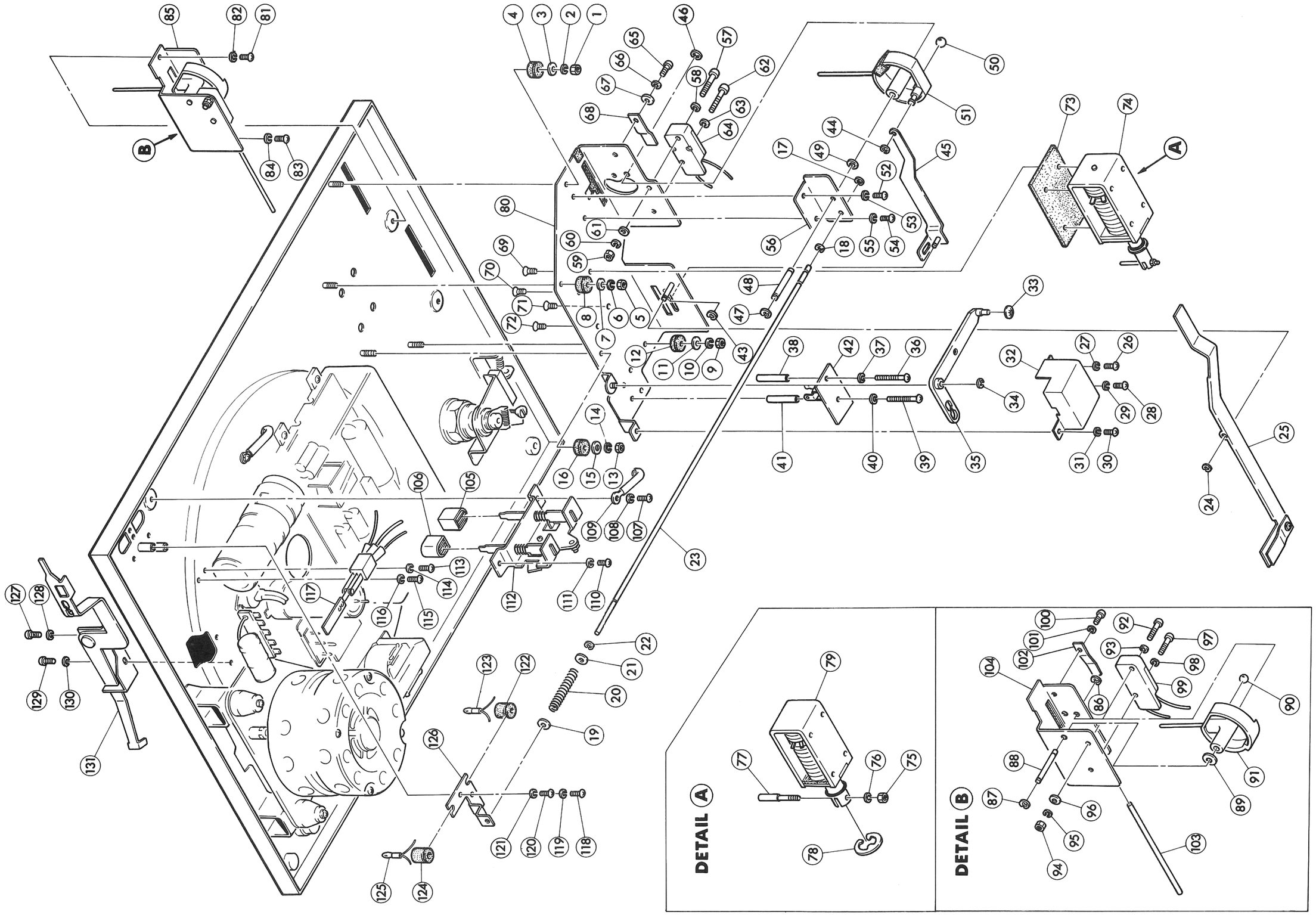

6-4. Exploded view (4) and parts list (See Fig. 6-4)

※ Use the stock number for parts order. If the stock number is unknown, use the model's name, fig. number, parts number and parts name correctly.

Parts No.	Stock No.	Description
1	5110241	Hex. Nut, M3 x 5.5 x 2.4
2	5121340	S Type Washer, 3 x 1.1 x 0.7
3	5120041	P Type Washer, 3 x 8 x 0.5
4	5502160	Rubber Cushion, auto base (1)
5	5110241	Hex Nut, M3 x 5.5 x 2.4
6	5121340	S Type Washer, 3 x 1.1 x 0.7
7	5120041	P Type Washer, 3 x 8 x 0.5
8	5502160	Rubber Cushion, auto base (1)
9	5110241	Hex. Nut, M3 x 5.5 x 2.4
10	5121340	S Type Washer, 3 x 1.1 x 0.7
11	5120041	P Type Washer, 3 x 8 x 0.5
12	5502160	Rubber Cushion, auto base (1)
13	5110241	Hex. Nut, M3 x 5.5 x 2.4
14	5121340	S Type Washer, 3 x 1.1 x 0.7
15	5120041	P Type Washer, 3 x 8 x 0.5
16	5502160	Rubber Cushion, auto base (1)
17	5151004	E Type Ring, 3ϕ
18	5151004	E Type Ring, 3ϕ
19	5120041	P Type Washer, 3 x 8 x 0.5
20		Spring, stopper shaft
21	5120041	P Type Washer, 3 x 8 x 0.5
22	5151004	E Type Ring, 3ϕ
23	6512040	Link (A)
24	5151004	E Type Ring, 3ϕ
25	6502100	Lift Lever
26	5103043	P Type Screw, M3 x 6
27	5121340	S Type Washer, 3 x 1.1 x 0.7
28	5103043	P Type Screw, M3 x 6
29	5121340	S Type Washer, 3 x 1.1 x 0.7
30	5103043	P Type Screw, M3 x 6
31	5121340	S Type Washer, 3 x 1.1 x 0.7
32		Shield Case, muting circuit
33		Washer
34	5151004	E Type Ring, 3ϕ
35	6502110	Auto Lever (1)
36		P Type Screw, M3 x 30
37	5121340	S Type Washer, 3 x 1.1 x 0.7
38	5232100	Spacer, muting circuit
39		P Type Screw, M3 x 30
40	5121340	S Type Screw, 3 x 1.1 x 0.7
41	5232100	Spacer, muting circuit
42	7732020	Muting Printed Circuit Board
43	5151004	E Type Ring, 3ϕ
44	5151004	E Type Ring, 3ϕ
45	6502120	Auto Lever (2)
46	5151004	E Type Ring, 3ϕ
47	5151004	E Type Ring, 3ϕ
48		Shaft, lift cam
49	5120041	P Type Washer, 3 x 8 x 0.5
50		Steel Ball
51	6012030	Auto Cam (A)
52	5103043	P Type Screw, M3 x 6
53	5121340	S Type Washer, 3 x 1.1 x 0.7
54	5103043	P Type Screw, M3 x 6
55	5121340	S Type Washer, 3 x 1.1 x 0.7
56		Auto Base (2)
57	5103048	P Type Screw, M3 x 15
58	5121340	S Type Washer, 3 x 1.1 x 0.7
59	5110241	Hex. Nut, M3 x 5.5 x 2.4
60	5121340	S Type Washer, 3 x 1.1 x 0.7
61	5120041	P Type Washer, 3 x 8 x 0.5
62	5103048	P Type Screw, M3 x 15
63	5121340	S Type Washer, 3 x 1.1 x 0.7
64	1160040	Micro Switch (AM-4100)
65	5103043	P Type Screw, M3 x 6
66	5121340	S Type Washer, 3 x 1.1 x 0.7
67	5120041	P Type Washer, 3 x 8 x 0.5
68		Leaf Spring, contorl lever
69	5103044	P Type Screw, M3 x 8
70	5103044	P Type Screw, M3 x 8
71	5103044	P Type Screw, M3 x 8
72	5103044	P Type Screw, M3 x 8
73		Rubber Mat, plunger
74		Plunger Ass'y
75	5110241	Hex. Nut, M3 x 5.5 x 2.4
76	5121340	S Type Washer, 3 x 1.1 x 0.7
77		Plunger Pin
78		E Type Ring, 7ϕ
79		Plunger
80		Auto Base (1)
81	5103043	P Type Screw, M3 x 6
82	5121340	S Type Washer, 3 x 1.1 x 0.7
83	5103043	P Type Screw, M3 x 6
84	5121340	S Type Washer, 3 x 1.1 x 0.7
85		Control Lever Ass'y
86	5151004	E Type Ring, 3ϕ
87	5151004	E Type Ring, 3ϕ
88		Shaft, lift cam
89	5120061	P Type Washer, 4 x 10 x 0.8
90		Steel Ball
91	6012040	Auto Cam (B)
92	5103048	P Type Screw, M3 x 15
93	5121340	S Type Washer, 3 x 1.1 x 0.7
94	5110241	Hex. Nut, M3 x 5.5 x 2.4
95	5121340	S Type Washer, 3 x 1.1 x 0.7
96	5120041	P Type Washer, 3 x 8 x 0.5
97	5103048	P Type Screw, M3 x 15
98	5121340	S Type Washer, 3 x 1.1 x 0.7
99	1160040	Micro Switch, AM-4100
100	5103043	P Type Screw, M3 x 6
101	5121340	S Type Washer, 3 x 1.1 x 0.7
102		Leaf Spring, selector lever
103		Link (B)
104		Auto Base (3)
105	5322040	Pushbutton (45)
106	5322030	Pushbutton (33)
107	5103043	P Type Screw, M3 x 6
108	5121340	S Type Washer, 3 x 1.1 x 0.7
109		Cord Clamper
110	5103043	P Type Screw, M3 x 6
111	5121340	S Type Washer, 3 x 1.1 x 0.7
112	7062060	Speed Selector Ass'y
113	5103043	P Type Screw, M3 x 6
114	5121340	S Type Washer, 3 x 1.1 x 0.7
115	5103043	P Type Screw, M3 x 6
116	5121340	S Type Washer, 3 x 1.1 x 0.7
117		Leaf Switch
118	5103043	P Type Screw, M3 x 6
119	5121340	S Type Washer, 3 x 1.1 x 0.7
120	5103043	P Type Screw, M3 x 6
121	5121340	S Type Washer, 3 x 1.1 x 0.7
122	5502170	Rubber Bushing, pilot lamp
123		Pilot Lamp, 6V
124	5502170	Rubber Bushing, pilot lamp
125		Pilot Lamp, 6V
126		Lock Holder
127	5103043	P Type Screw, M3 x 6
128	5121340	S Type Washer, 3 x 1.1 x 0.7
129	5103043	P Type Screw, M3 x 6
130	5121340	S Type Washer, 3 x 1.1 x 0.7
131		Selector Lever Ass'y

6-5. Packing and accessories list

Packing list

Parts No.	Stock No.	Description
1		Carton Case
2		Foamed Polystyrene Package (Lower)
3		Record Player
4		Foamed Polystyrene Package (Upper)
5	5062020	Dust Cover
6	6032050	Belt
7	6112050	Turntable
8	5502110	Turntable Rubber Mat
9		Inner Packing

Accessories list

Parts No.	Stock No.	Description
1	6912110	Main Weight
2		Shell (with cartridge)
3		45 rpm Adaptor
4		Sub Weight
5		Screwdriver
6		Oil Feeder

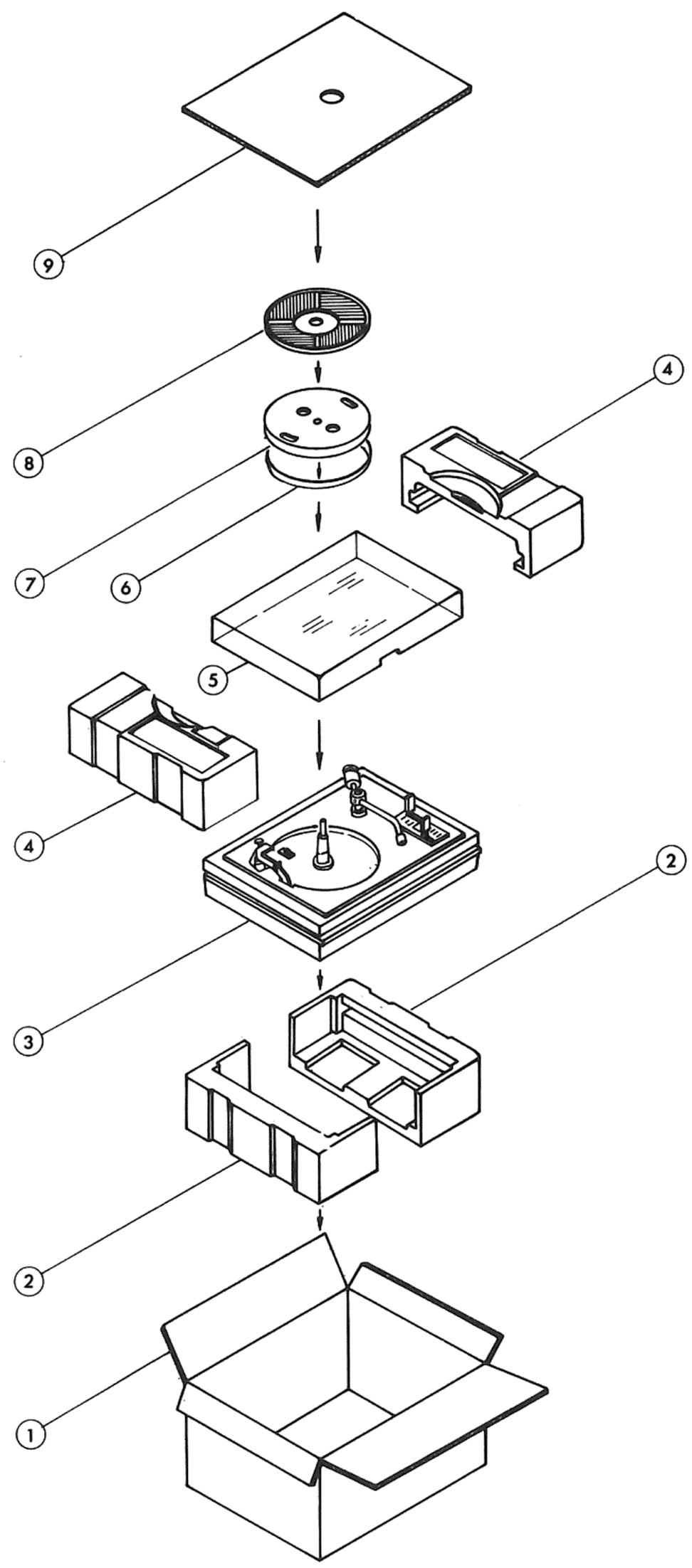

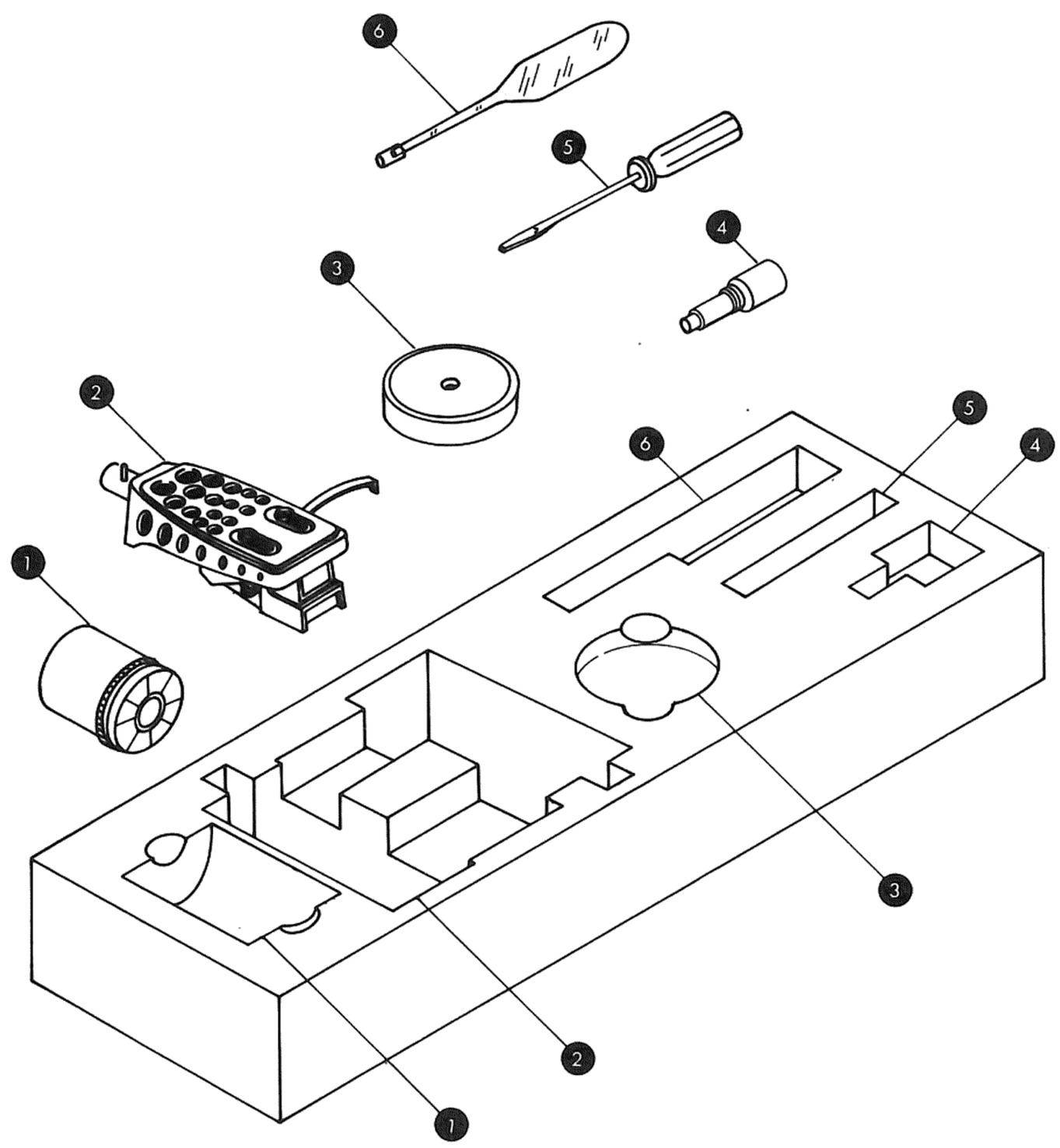

6-6. Auto Lift circuit board

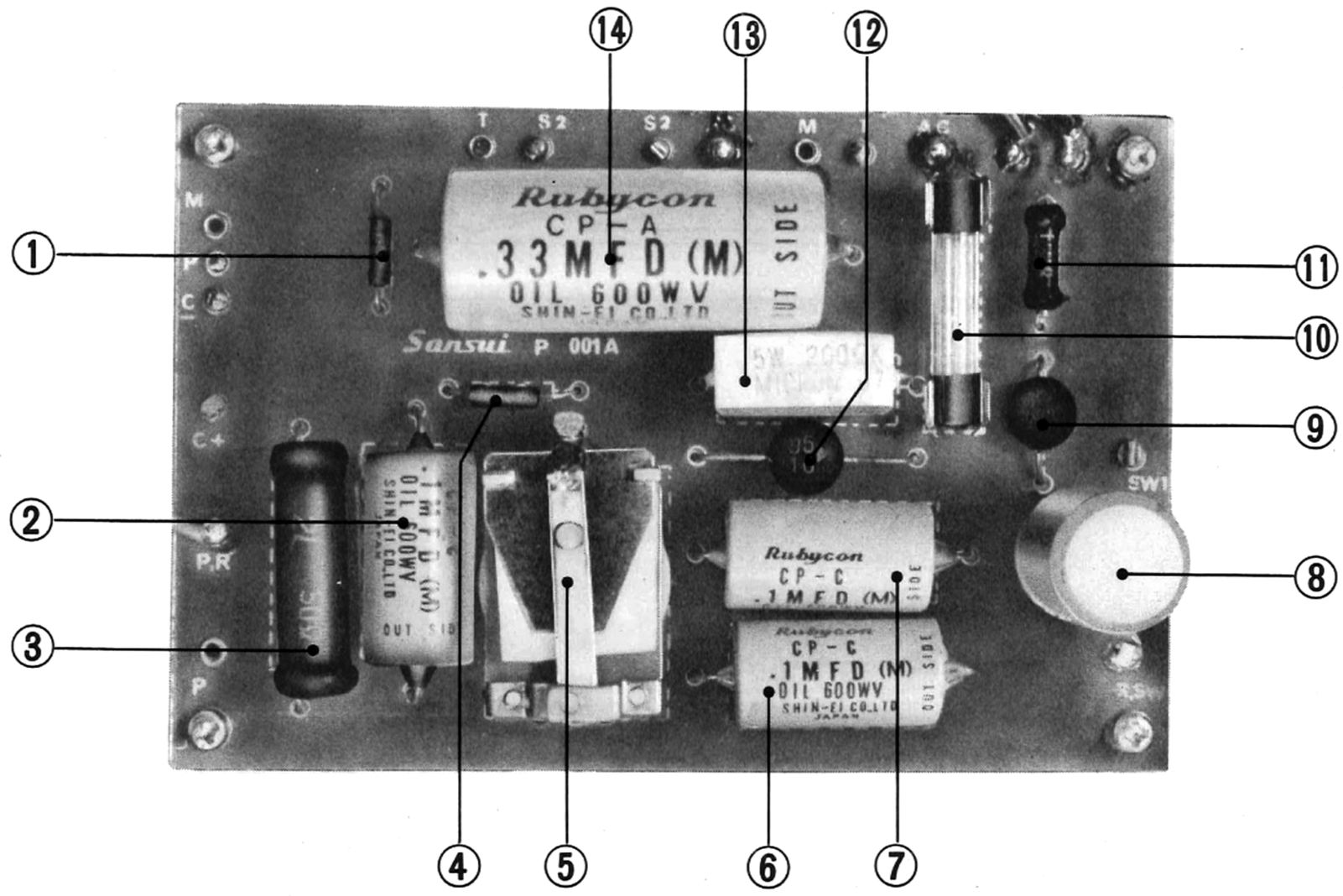

Parts No.	Stock No.	Description	
1	0101479	5 Ω ¼ W	Carbon Resistor
2	0591108	0.1 μF 600 V	Oil Capacitor
3	0142500	50 Ω 2 W	Wire Wound Resistor
4	0101124	120 Ω ¼ W	Carbon Resistor
5			Relay
6	0591108	0.1 μF 600 V	Oil Capacitor
7	0591108	0.1 μF 600 V	Oil Capacitor
8	0512331	330 μF 16 V	Electrolytic Capacitor
9		FR2-02	Diode
10		1A 125 V	Power Fuse
11	0141109	1 Ω 1 W	Wire Wound Resistor
12		FR2-10	Diode
13	0155201	200 Ω 5 W	Cement Resistor
14	0591208	0.2 μF	Oil Capacitor

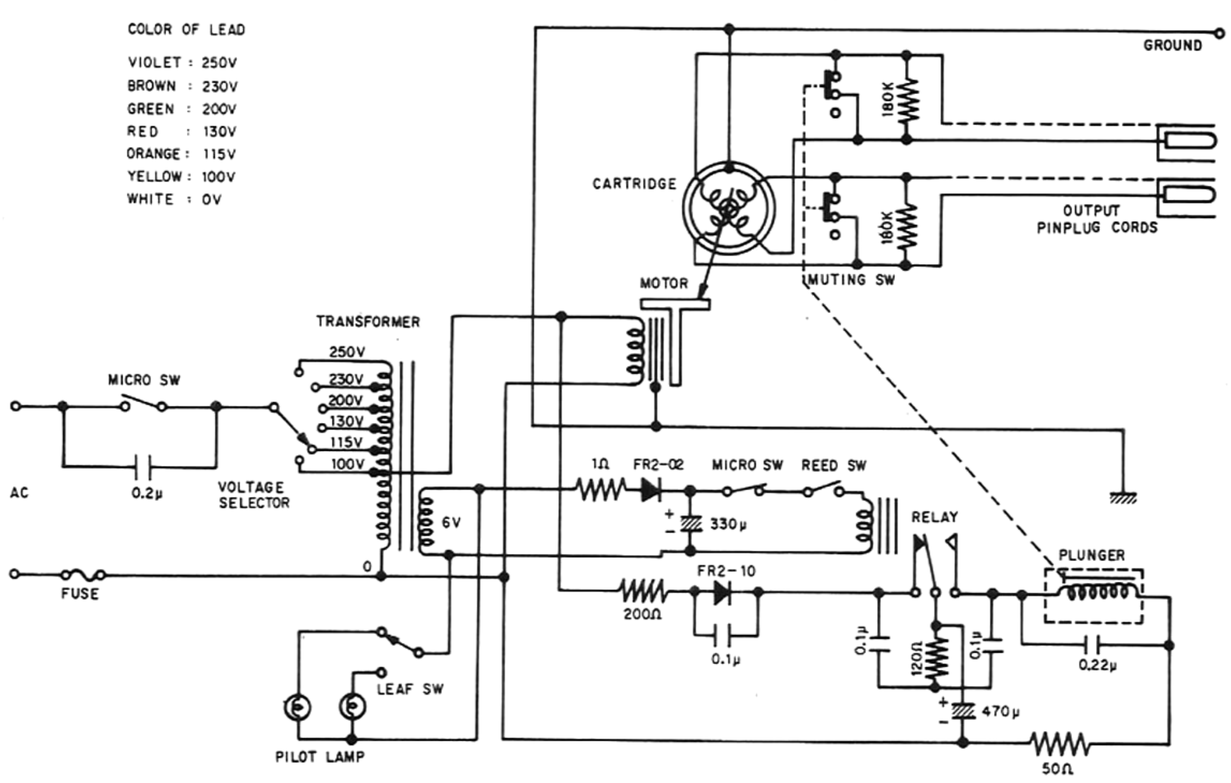

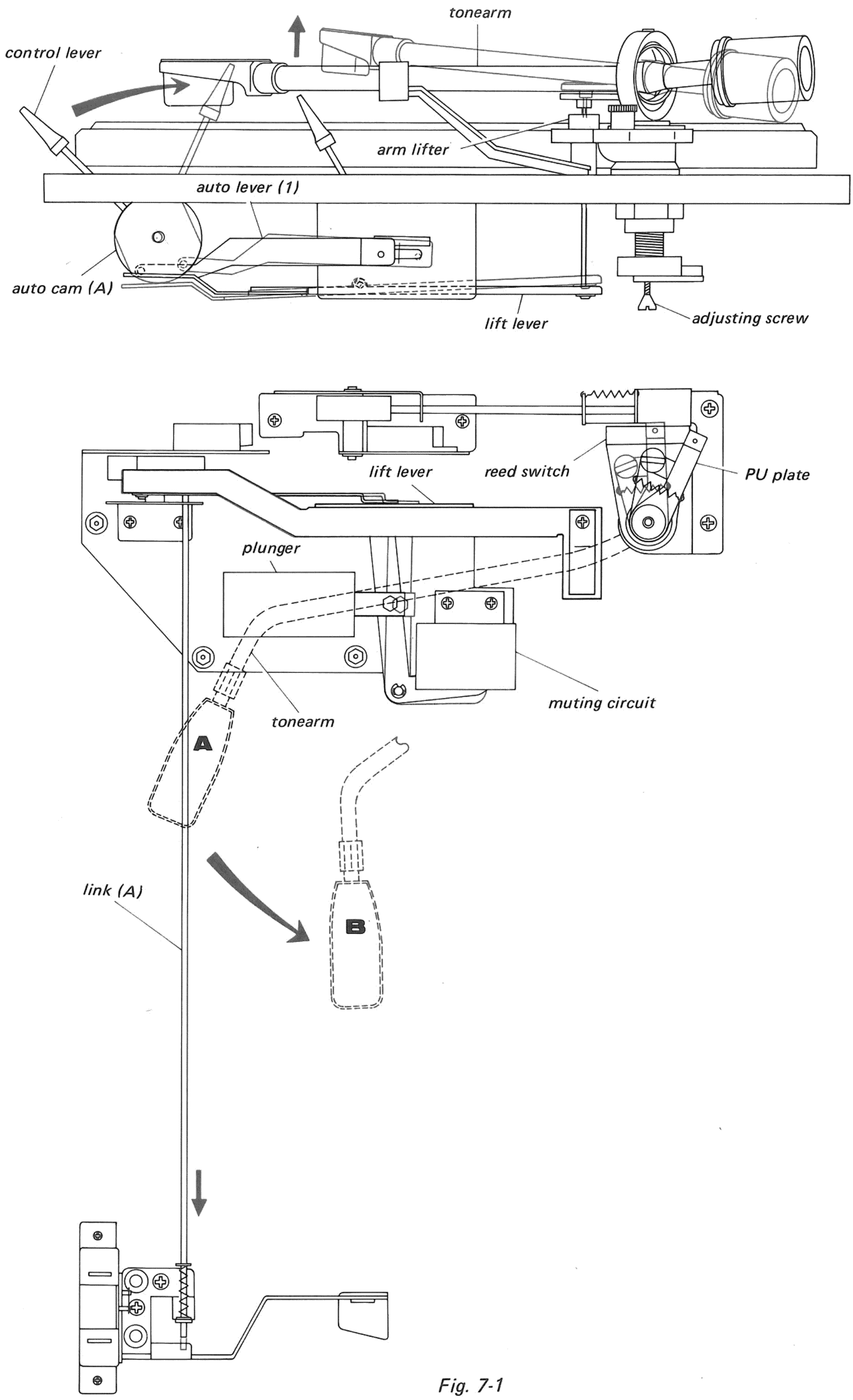
tonearm
control lever
arm lifter
auto lever (1)
auto cam (A)
lift lever
adjusting screw
lift lever
reed switch
PU plate
plunger
muting circuit
tonearm
A
B
link (A)

Fig. 7-1

7. OPERATION OF AUTO LIFT AND STOP MECHANISM

1. The tonearm moves from "A" to "B" position while playing as Fig. 7-1.
2. At this time, the capacitors (330 μF, 200 WV, 470 μF, 16 WV) are charged by the current through the diodes (FRZ-02, FR2-10).
3. As soon as the stylus reaches "B" position (the finishing groove), the magnetic reed switch will be ON.
4. When the magnetic reed switch is ON, the relay will be actuated.
5. The discharging current from the capacitors operates the plunger.
6. When the plunger is actuated, the lift lever elevates the arm lifter and tonearm so that the stylus is raised from the record.
7. The Auto cam (A) is linked with the plunger so that the control lever returns to OFF position from PLAY.
8. At the same time, the muting circuit linked with the plunger will keep the terminals of the cartridge shorted.

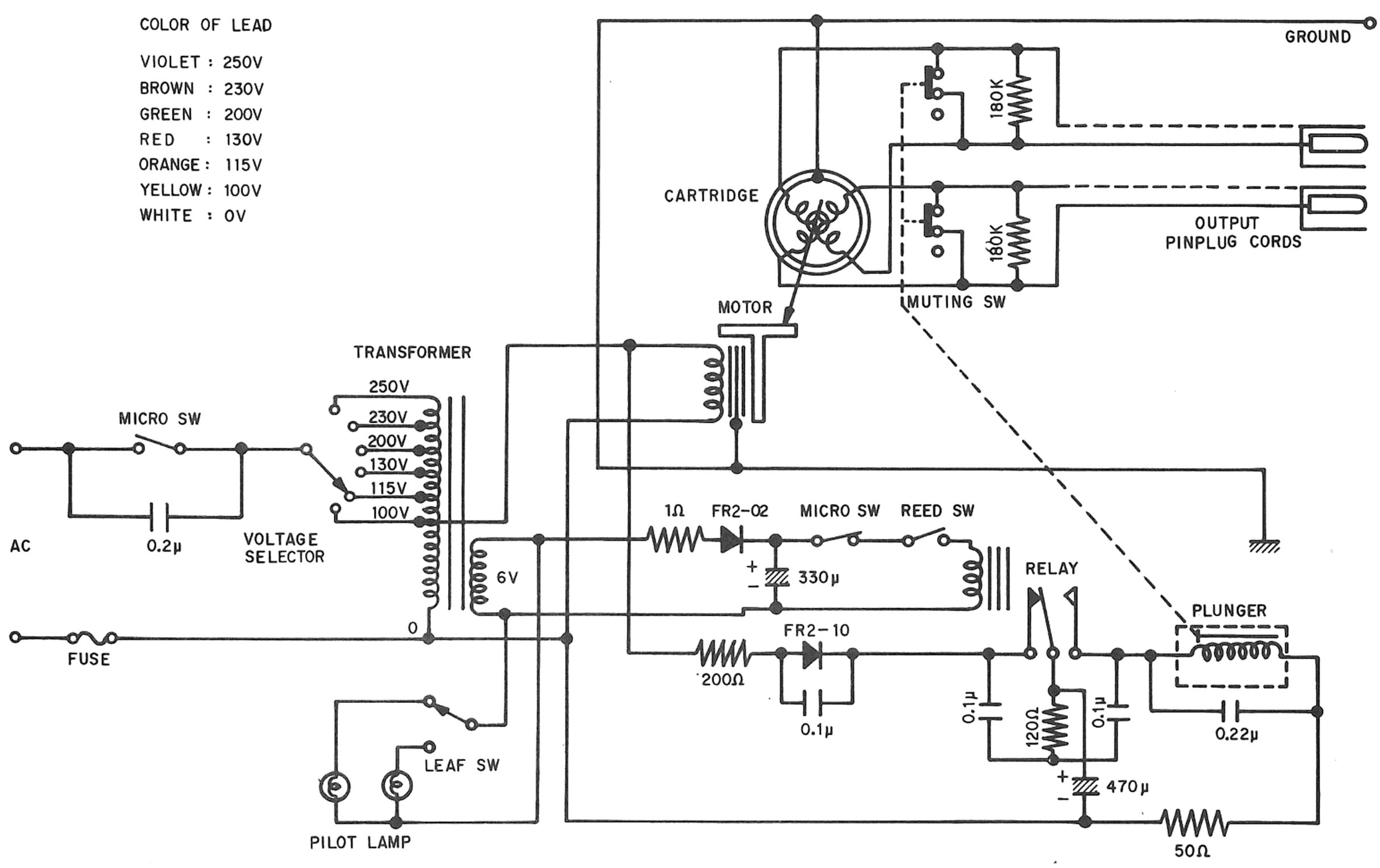
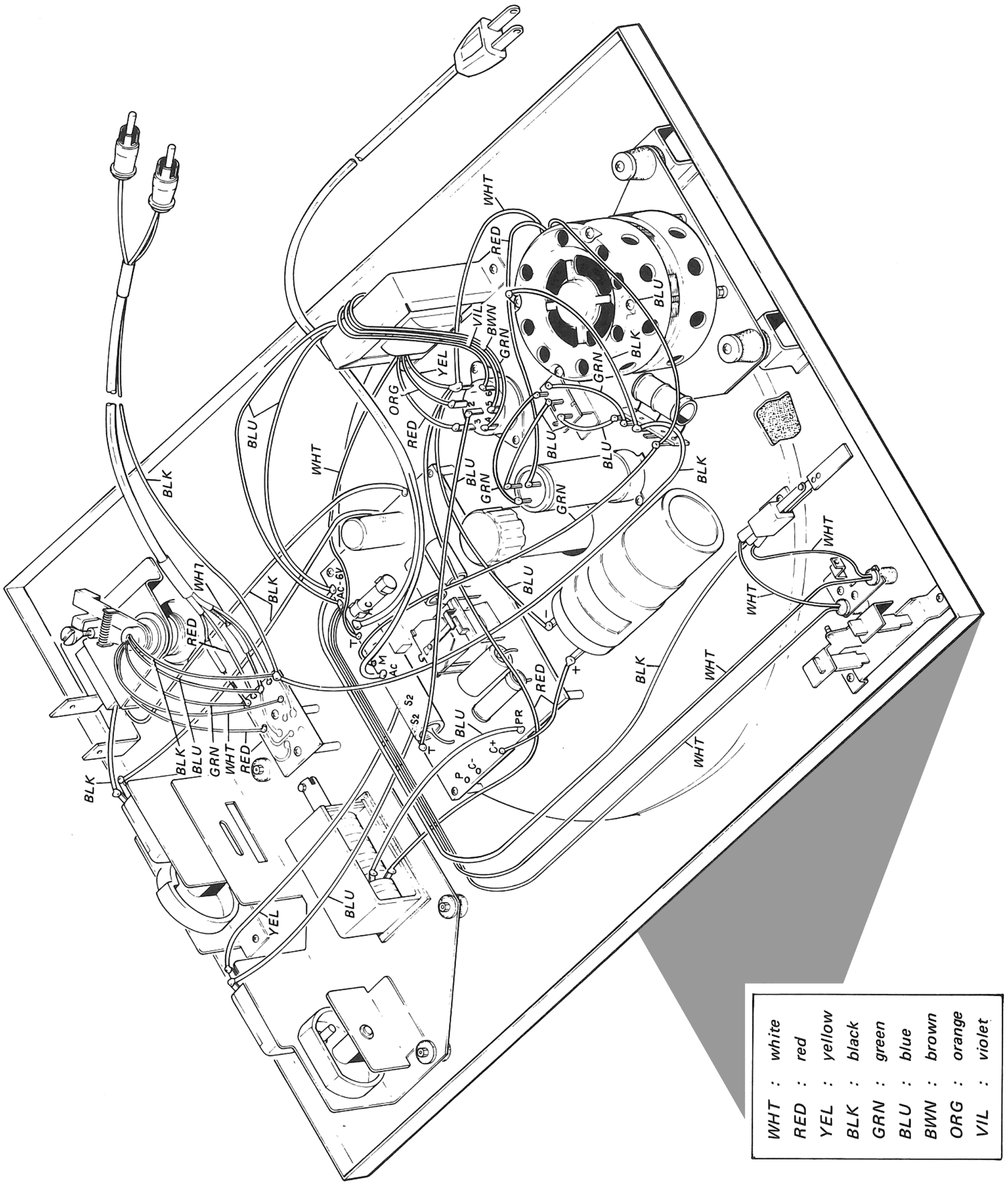
8. WIRING DIAGRAM