SERVICE MANUAL

STEREO TURNTABLE

SANSUI SR-636/838

Sansui

SANSUI ELECTRIC CO., LTD.

SPECIFICATIONS

• SR-636

Type	Two-speed direct-driven
Speeds	33-1/3, 45 rpm
Fine speed adjustment range	±2.5%
Platter	Aluminum alloy die-cast 318 mm (12-9/16") diameter, 1.6 kg (3.5 lbs.)
Motor	20-pole brushless DC servo-type
Wow and flutter	less than 0.028% (W.R.M.S.)
S/N	better than 63 dB (IEC-B)
Rumble	better than 71 dB (DIN-B)
Tonearm	Statically-balanced S-shaped tubular type
Tonearm length	230 mm (9-1/16")
Overhang	16.1 mm (11/16")
Optimum cartridge weight When the headshell supplied is employed	4 ~ 11 g
Dimensions	490 mm (19-5/16") W 167 mm (6-5/8") H 390 mm (15-3/8") D
Weight	12.8 kg (28.2 lbs) net 14.8 kg (32.6 lbs) packed
Power Consumption	7W (rated)
Cartridge	SV-43
Frequency response	10 ~ 20,000 Hz
Output voltage	3.3 mV per channel (1,000 Hz 50 mm/sec)
Load impedance	47 kΩ
Tracking force	2.0 g
Stylus	diamond (SN-43)

• SR-838

Type	Two-speed direct-driven
Speeds	33-1/3, 45 rpm
Fine speed adjustment range	±2.5%
Platter	Aluminum alloy die-cast 318 mm (12-9/16") diameter, 1.7 kg (3.7 lbs)
Motor	20-pole brushless DC servo-type (Quartz-servo)
Wow and flutter	less than 0.025% (W.R.M.S.)
S/N	better than 64 dB (IEC-B)
Rumble	better than 72 dB (DIN-B)
Tonearm	Statically-balanced S-shaped tubular type
Tonearm length	230 mm (9-1/16")
Overhang	16.1 mm (11/16")
Optimum cartridge weight When the headshell supplied is employed	4 ~ 11 g (11 ~ 20.5 g with the sub-weight mounted)
Total weight including the headshell)	23 ~ 32 g with the subweight mounted
Dimensions	490 mm (19-5/16") W 167 mm (6-5/8") H 390 mm (15-3/8") D
Weight	12.8 kg (28.2 lbs) net 14.8 kg (32.6 lbs) packed
Power Consumption	7W (rated)
Cartridge	SV-43
Frequency response	10 ~ 20,000 Hz
Output voltage	3.3 mV per channel (1,000 Hz 50 mm/sec)
Load impedance	47 kΩ
Tracking force	2.0 g
Stylus	diamond (SN-43)

• Design and specifications subject to change without notice for improvements.

www.vinylengine.com

1. BLOCK DIAGRAM

1) SR-636

Fig. 1-1

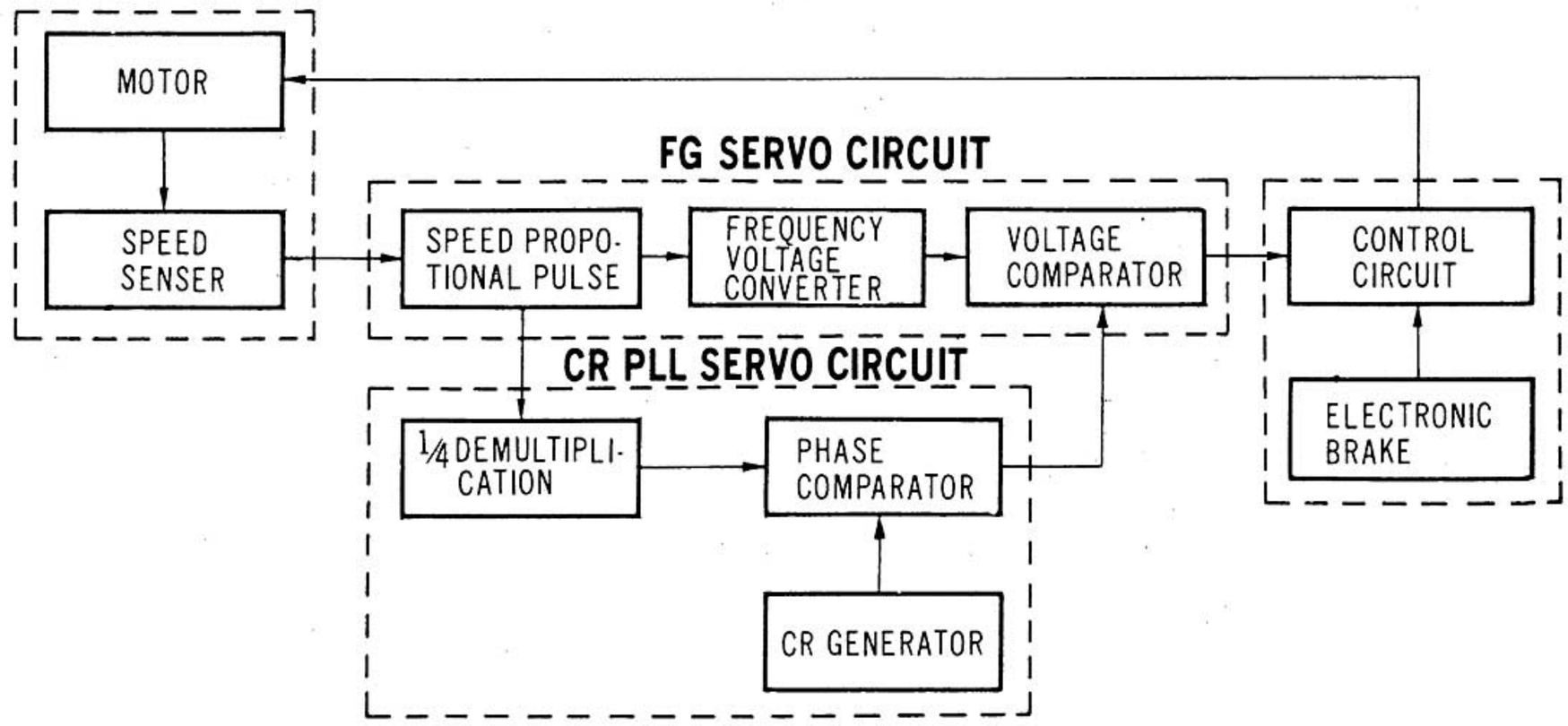

Fig. 1-2

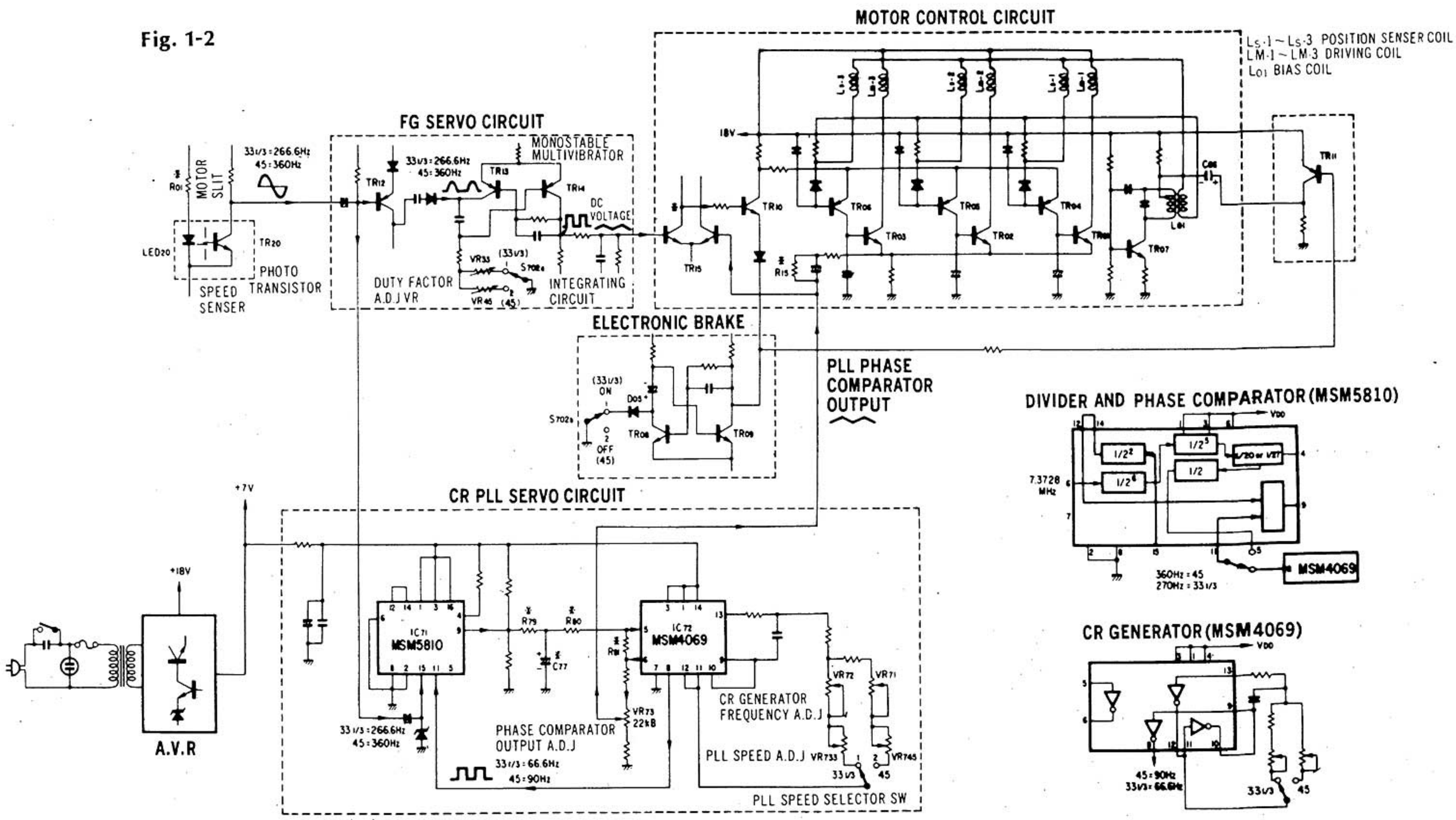

◇SR-636, SR-838 Main Circuit

The electronic circuitly in this set is two servo circuits and a motor control circuit.
The servo circuit employs the PLL servo system and the speed control system (Frequency-Generator servo) together.
The F-G servo system is effective for the threshold characteristic and also control of PLL-Lock-out.
However, PLL servo system has an advantage against the influence by load fluctuation.

For this reason, this set employs both the F-G servo system and PLL servo system by which rotation fluctuation is always locked in the reference signal.
PLL servo circuit of the phase control system, is both CR generator and quartz generator used in this model.

www.vinylengine.com

2) SR-838

Fig. 1-3

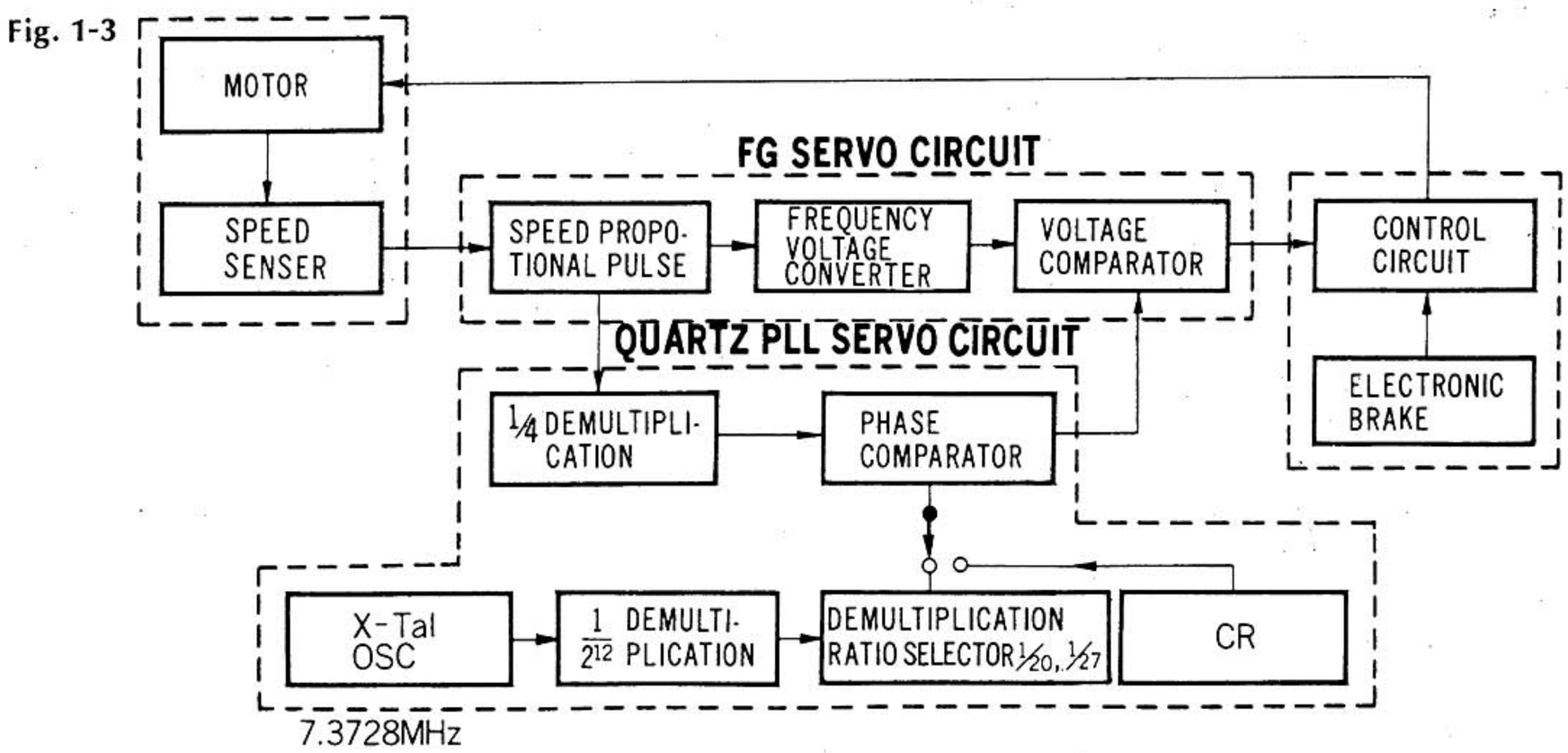

Fig. 1-4

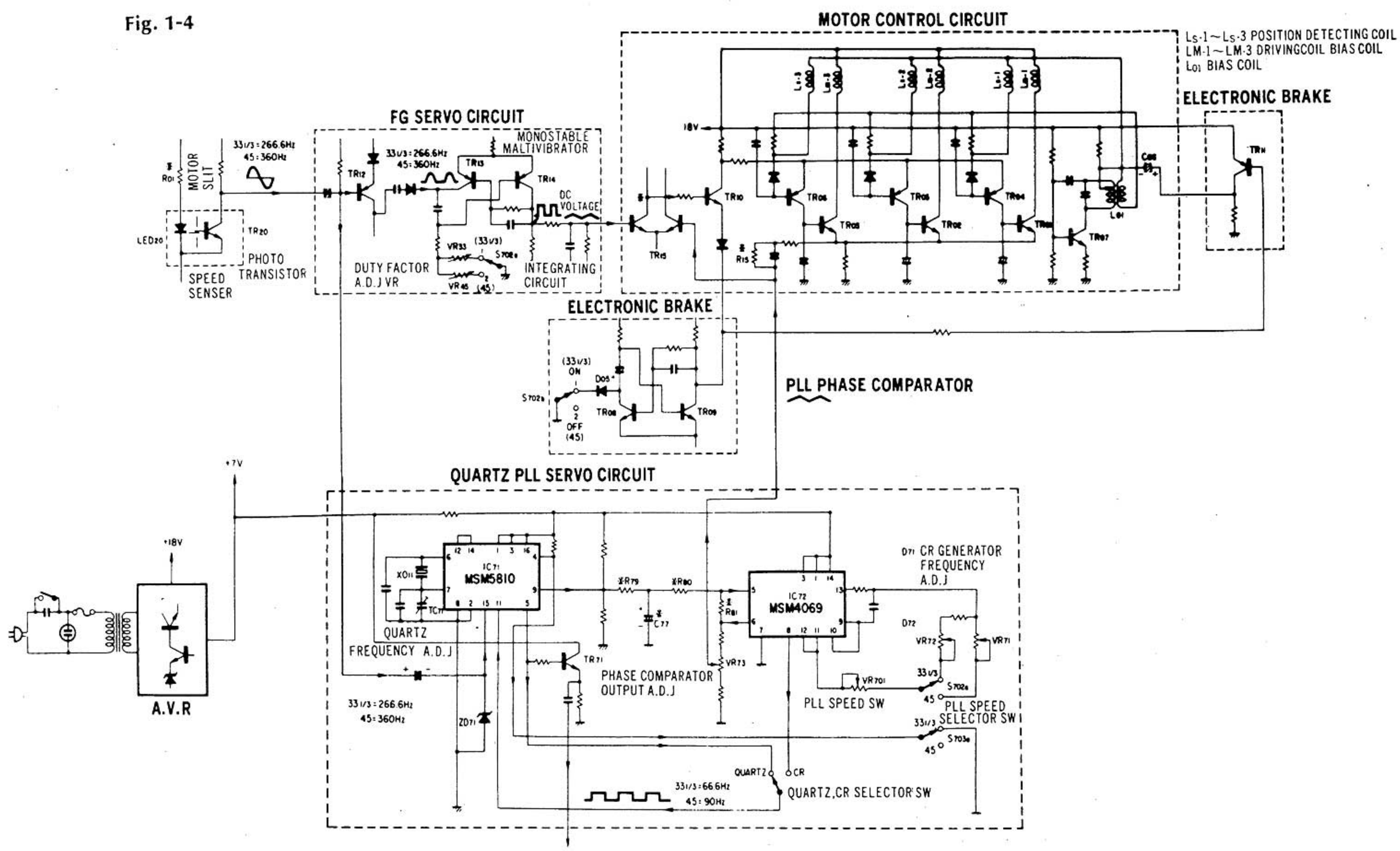

www.vinylengine.com

2. OPERATION OF NEW CIRCUIT

1) The Function and Operation of MSM5810 (Fig. 2-1)

The MSM 5810 includes divider of PLL servo circuit, selector terminal of 1/20 (45 rpm) and 1/27 (33-1/3 rpm) and phase comparator.

A). Quartz PLL

1. Input signal 7.3728 MHz from quartz generator is added to the pin, No. 6, and is demultiplied as $1/2^6 \times 1/2^5 \times 1/2^0 \times 1/2$ (45 rpm) by passing through the divider; then, it is applied to phase comparator.
2. The pin No. 1, 2, 3, are selector terminal of dividing ratio from 1/2 to $1/2^n$. By supplying VDD to pins No. 1, No. 3, and by grounding pin No. 2, $1/2^5$ of dividing ratio is obtained.
3. Divided output signal appears at pin No. 5, and it switches TR71 to light the neon lamp.
4. Since trigger pulse frequency changes with turntable revolution speed, the dividing ratio is necessary to shift accordingly to the turntable revolution speed; therefore by adding H level or L level to pin No. 4, the dividing ratio of 1/20 or 1/27 is selected.
5. A signal from speed senser is supplied to pin No. 15, and after divided into 1/2, the signal is supplied to phase comparator.

B). CR. PLL

1. From CR generator in MSM4069, the reference signal enters into the pin No. 11, of MSM5810.
2. A signal from speed senser is supplied to pin No. 15 and after divided into 1/2, the signal is supplied to phase comparator.
3. In quartz PLL, the revolution speed is locked by its generating frequency; however, in CR PLL, pitch is controllable by altering its generating frequency.

2) Frequency-voltage Converter Circuit (Fig. 2-2)

The frequency-voltage converter circuit is composed of a monostable multivibrator by TR13, TR14.
When trigger pulse detected by speed sensor is supplied to TR13, pulses which width are defined by time constant CR20, R22, R68, and VR33 (R22, VR45), appears at the collector of TR14 as the same number as input trigger pulses.
The volume of VR33 and VR45 are for duty factor adjustment to determine the "t", the pulse width.
With fluctuation of turntable revolution speed, the trigger pulse frequency occurred in a unit period varies.
As the width "t" of the pulse is defined by above mentioned C, R, it would not change but term "T" in which the trigger occurs, would change.
Therefore, at the output of the next stage, integrating circuit, the proportioned D.C output to the trigger pulse frequency is obtained.

• Duty Factor

When a pulse of width "t" is occurring in a certain term "T", t/T is so called DUTY FACTOR.

$$\text{DUTY FACTOR (D)} = \frac{\text{PULSE WIDTH (t)}}{\text{TERM (T)}}$$

Fig. 2-1

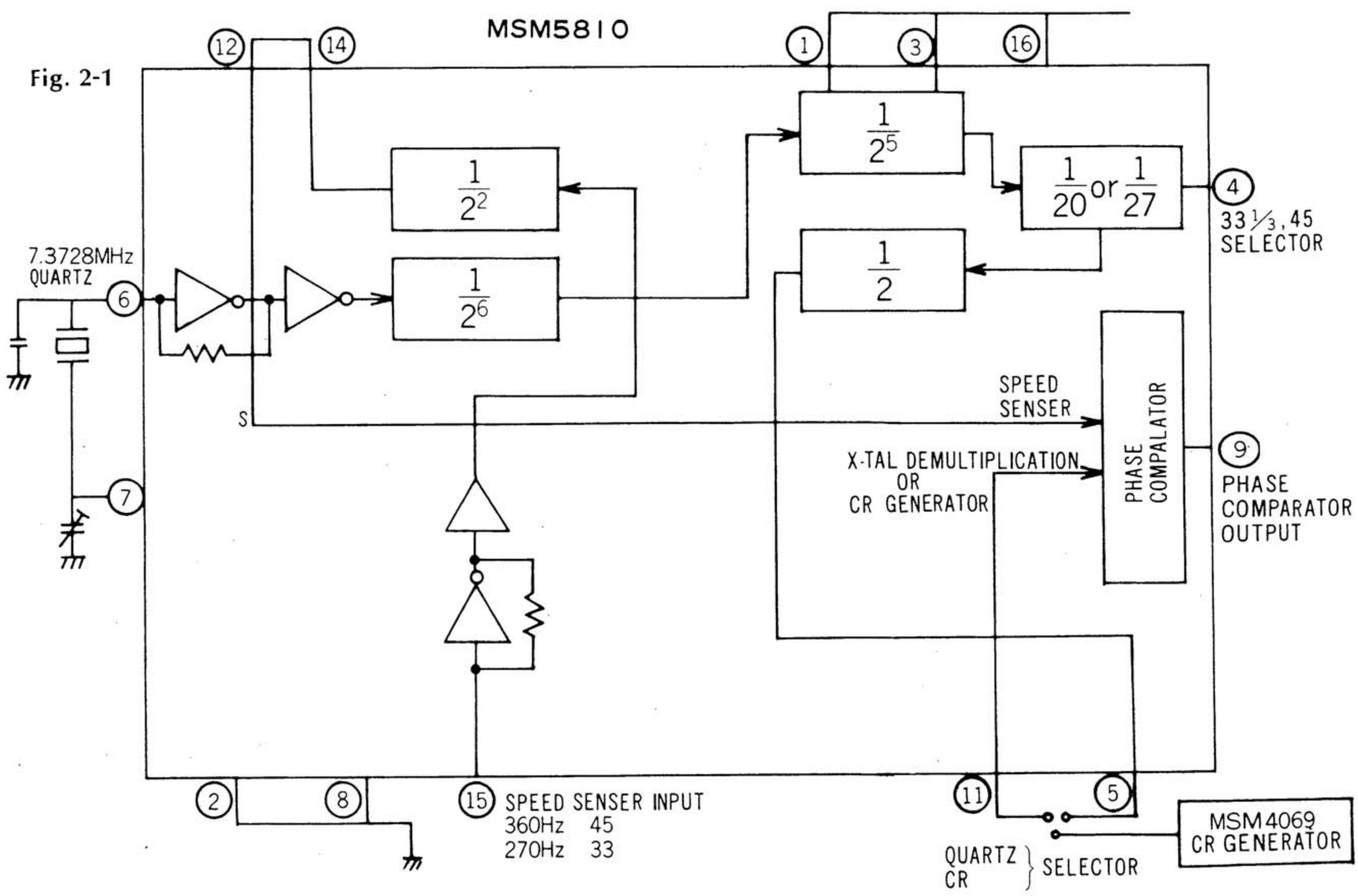

www.vinylengine.com

3) Electronic Brake (Fig. 2-3)

As turntables (platters) which are employed in direct drive system players, have great inertial moment, it requires certain time to settle the rotation when shifting the revolution speed from 45 rpm to 33-1/3 rpm.
To avoid above phonemenon, this model is developed to have Electronic Brake. The torque needed for the brake is obtained by reversing the revoluting direction of motor to eliminate the capacitor C06 electrically from high frequency oscillator in the motor control circuit and by switching off the speed control transistor (TR10) to omit the servo control that the revolution torque is increased.
In fact, turntable platter would not begin reverse turn because of the inertial moment and time length of braking.
The circuit to eliminate the capacitor C06 electrically and to turn off the speed control transistor is monostable multivibrator and selector switch as shown in Fig. 2-3.

Operation

A circuit including TR08 and TR09 is a monostable multivibrator and usually its operation is in stable state with TR09 being ON. When TR09 is ON, TR10 functions normally and TR11 is ON. C06 and R20 are parallelly connected and functioning to TR11. When revolution speed is shifted from 45 rpm to 33-1/3 rpm, namely S702 is switched from 2 to 1, a minus trigger is supplied to monostable multivibrator.

At the same time, plus pulse defined by R13 and C11 is generated at the collector of TR09. By this pulse, the emitter voltage of TR10 is increased so that TR10 becomes not to function as speed control and the servo system does not function.
Since this pulse is supplied to the base of TR11 simultaneously, TR11 turns off and makes C06 not function completely.
When C06 is eliminated electrically, both reverse turn and torque increase by cutting off the servo system occur at once. Consequently, the brake functions only while the pulse is generated.

Reverse Revolution

At normal revolution, the direction is defined by relation between position senser coil and magnet, position senser coil and driving coil, and others. One of 3 position senser coils functions successively and individually which turns on the switching transistors connected to position senser coil to function driving coils.
At reverse revolution, a signal wave having 90° ~ 180° of phase difference against standard wave is mixed to preceeding standard wave by eliminating C06 electrically. Then the mixed wave is supplied to switching transistors.
Above function breaks the electrical balance of position senser coils and its function becomes opposite; therefore, the position sensor coil which is normally ON turns OFF and other coils become ON. As a result, the opposite revolution torque for brake is obtained.

Fig. 2-2

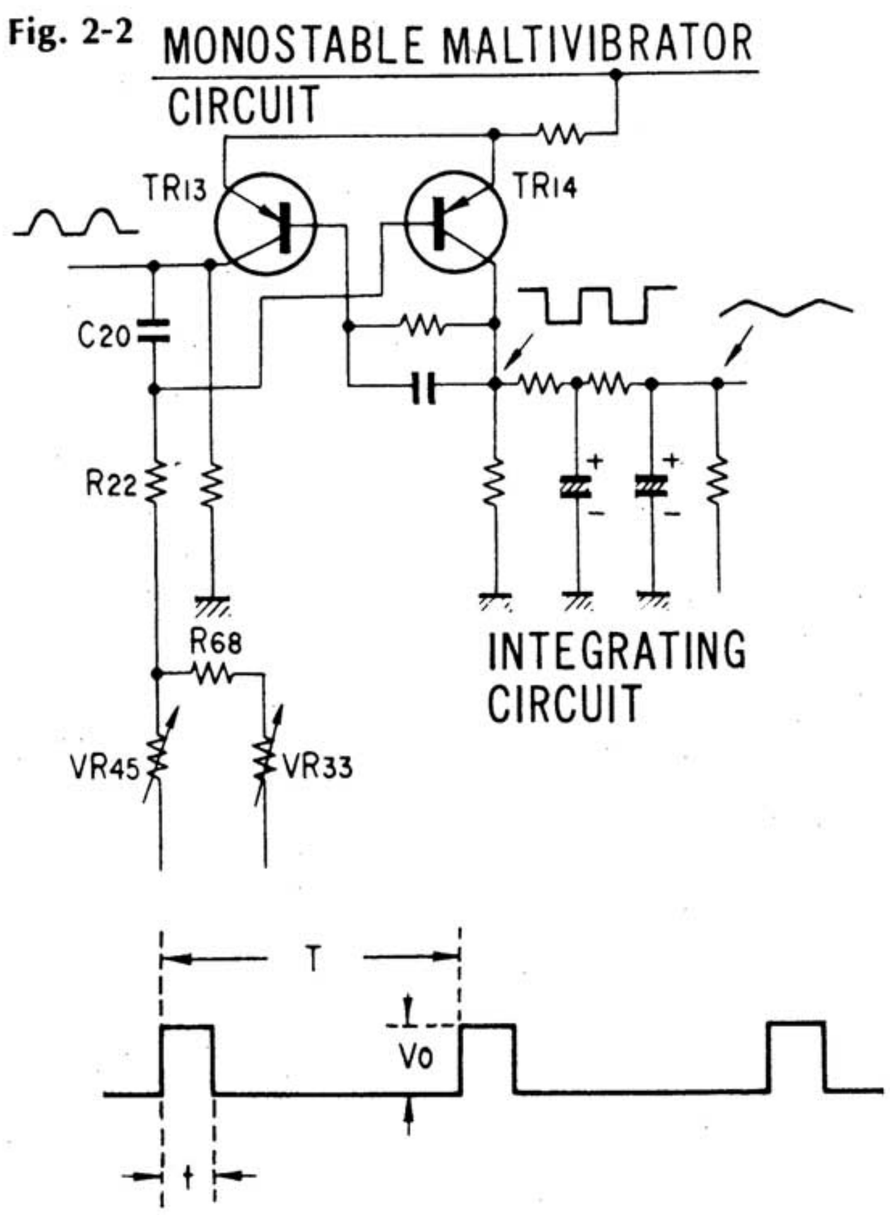

Fig. 2-3

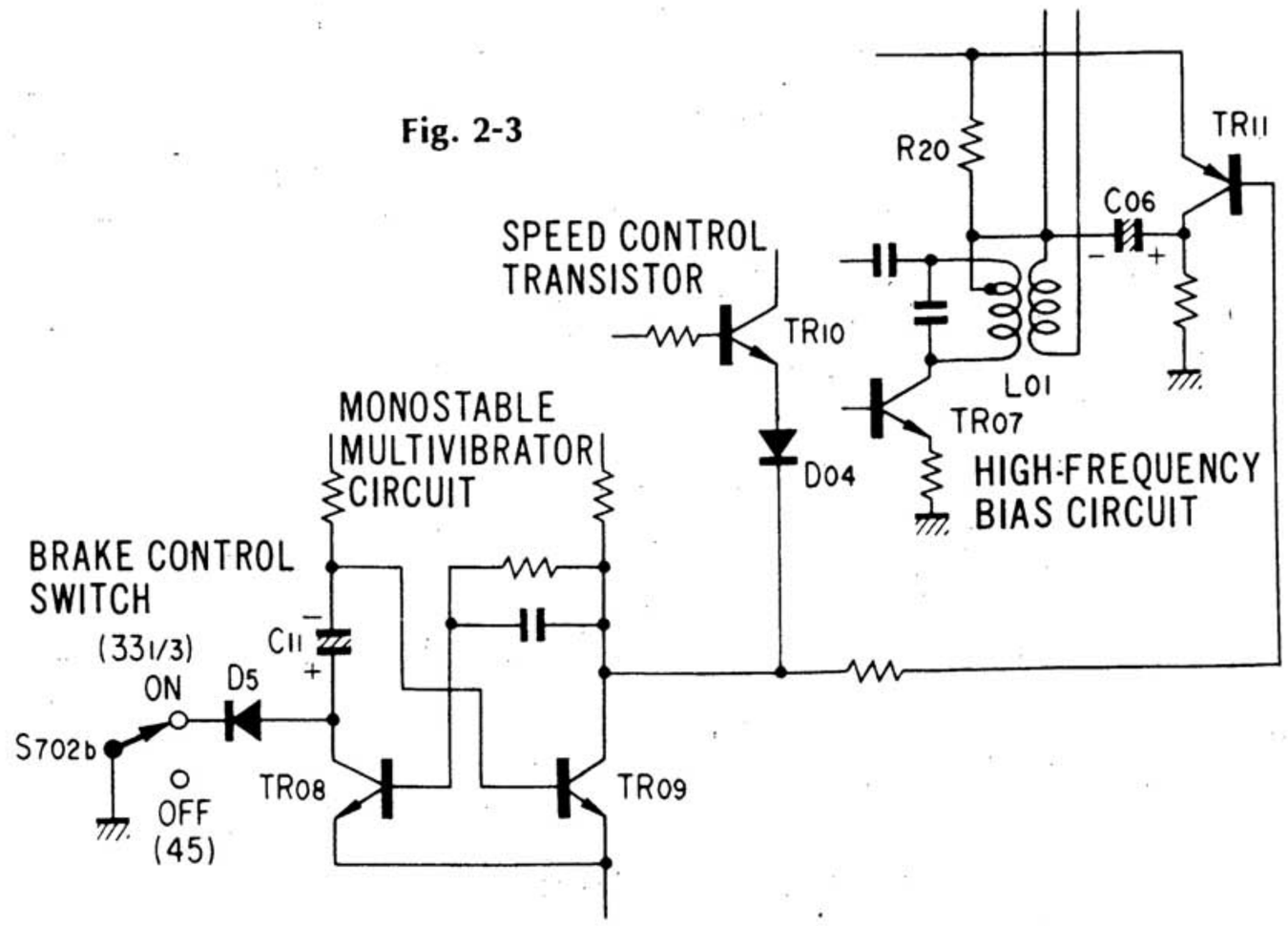

www.vinylengine.com

3. MECHANISM PARTS LOCATION AND PARTS LIST

1) Top View Parts List

● SR-636<Top View> Fig. 1

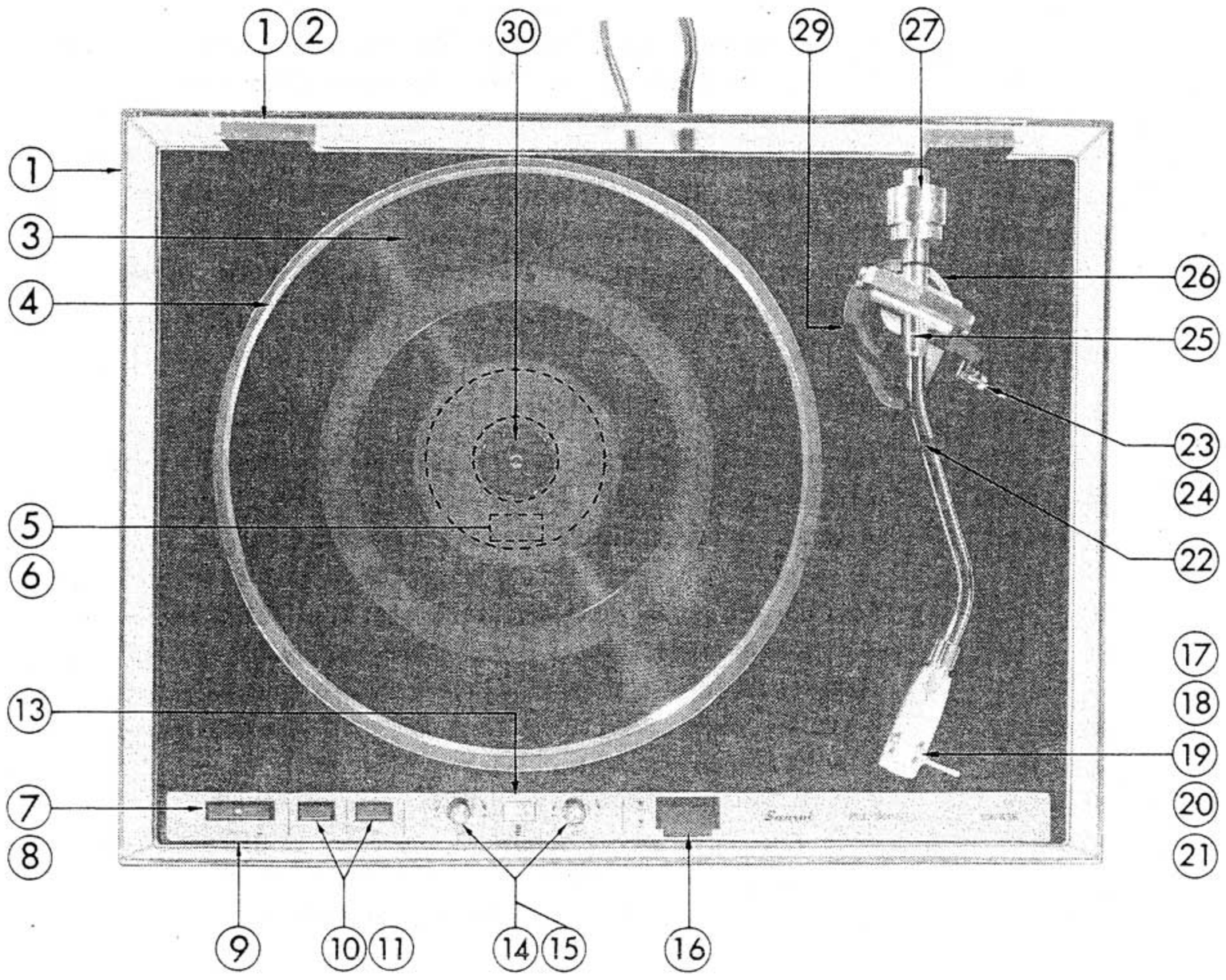

● SR-838<Top View> Fig. 2

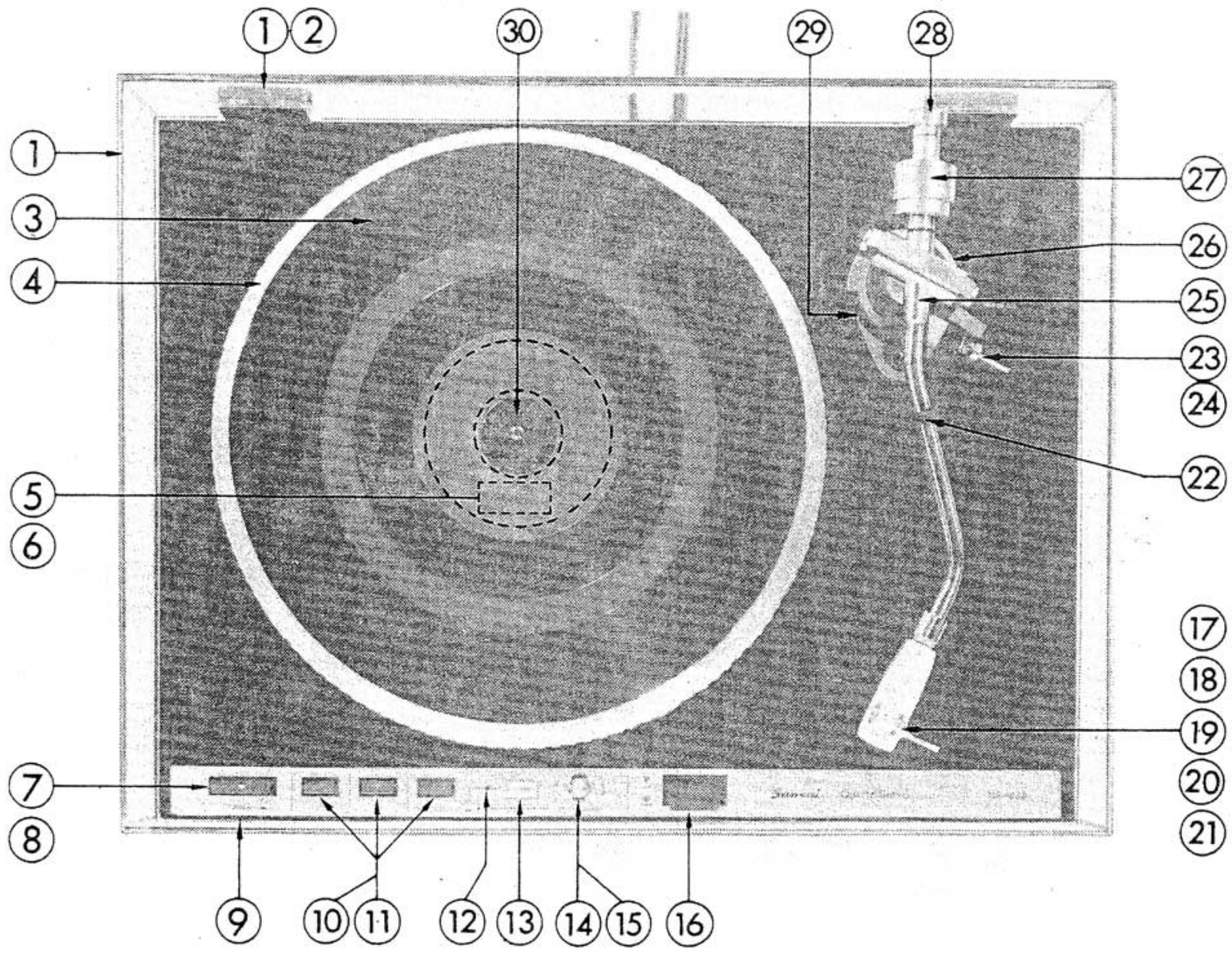

NOTE:
AS to U.L., C.S.A., B.S., ES and XX marked in the Parts Lists, note the followings:
U.L., C.S.A. . . Approved parts used in the unit which is applicable to the U.S. and Canada under safety standard.
B.S. . . . . Approved parts used in the unit which is applicable to British under safety requirement.
E.U. . . . . Approved parts used in the unit which is applicable to Sweeden, Denmark, Norway, Finland, West Germany, and Switzerland under safety requirement.
XX . . . . . Parts used in the unit which is applicable to other countries excepting mentioned above.

* Parts unspecified such as CSA, UL, EU & XX in "Description" are common parts.

Parts List<SR-636/838 Top View>

No.	Parts No.	Stock No.	Description
1		7012150	Dust Cover Ass'y
		6922320	Auto Hinge Plate, Dust Cover
		6922370	Auto Hinge, Dust Cover
		5502711	Rubber Cushon
		5102663	F Type Screw M4×10, Dust Cover
2		6922300	Auto Hning Lock Plate, Cabinet
3		5502741	Rubber Mat EU, CSA, BS.
		5502851	Rubber Nat XX, UL
4		6112202	Turntable (Platter) (SR-838 only)
		6112191	Turntable (Platter) (SR-636 only)
5	LD01	0319140	SR 106C L.E.D, Speed Sensor
6	TR20	0390010	PH 101 Photo Transistor
7		5322150	Push Button, Power Switch
8		5392201	Button Guide, Power Switch
9		5332090	Sansui Badge
10		5322160	Push Button, Selector, Quartz
11		5392190	Button Guide, Selector, Quartz
12		0319130	Quartz indicator L.E.D (SR-838 only)
13		5442020	Illuminator
14		5312280	Knob, Pitch-Control
15		5392210	Knob Guide, Pich Control
16		5392220	Lever Guide, Lifter
17		6642250	Head Shell
18		4310340	Cartridge Ass'y (SV-45) XX (Stylus, Screw Ass'y, Stylus Cover)
19		4940220	Stylus (SN-43)
20		5012080	Stylus Cover
21		5192150	Screw Ass'y
22		6622270	Arm Rest Ass'y
23		6912610	I.F.C. Mechanical Ass'y (I.F.C. Weight, I.F.C. Shaft)
24		6912620	I.F.C. Thread Ass'y
25		7092710	Tonearm Ass'y
26		7092720	Arm Base Ass'y
		5172290	Base nut
		5192140	Hox Socket Screw M3×4, Arm Base
27		6912590	Main Weight
28		6912600	Sub Weight (SR-838 only)
29		7082310	Tonearm Guide Ass'y (Piston Hoxsocket Screw)
		5192130	Hox Socketscrew M4×0.7, Tonearm Guide
30		6172040	45 Adaptor

Abbreviations

1. Pan Head Tapping Screw .....PT Type
2. Washer Head Tapping Screw .....WT Type
3. Pan Head Screw .....P Type
4. Pan Head SEMS A Screw ....PSA Type
5. Pan Head SEMS B Screw ....PSB Type
6. Binding Head SEMS F Screw ..BSF Type
7. Binding Head Screw .....B TYPE
8. Flat Counter Sunk Head Screw..F Type
9. Flat Counter Sunk Wood Screw .....FC Type
10. Round Head Wood Screw ....RH Type
11. Hex. Socket Setscrew..SC Type
12. Slot Type Setscrew..SS Type
13. Binding Head SEMS B Screw .....BSB Type
14. Spring Washer .....S Type
15. Plain Washer .....P Type
16. Retaining Ring (E Washer)..E Type
17. Toothed Lock Washer (External) .....TLE Washer
18. Wave Washer
19. Hexagon Nut H Type Nut

www.vinylengine.com

2) Bottom View Parts List

● SR-636 <Bottom View> Fig. 3

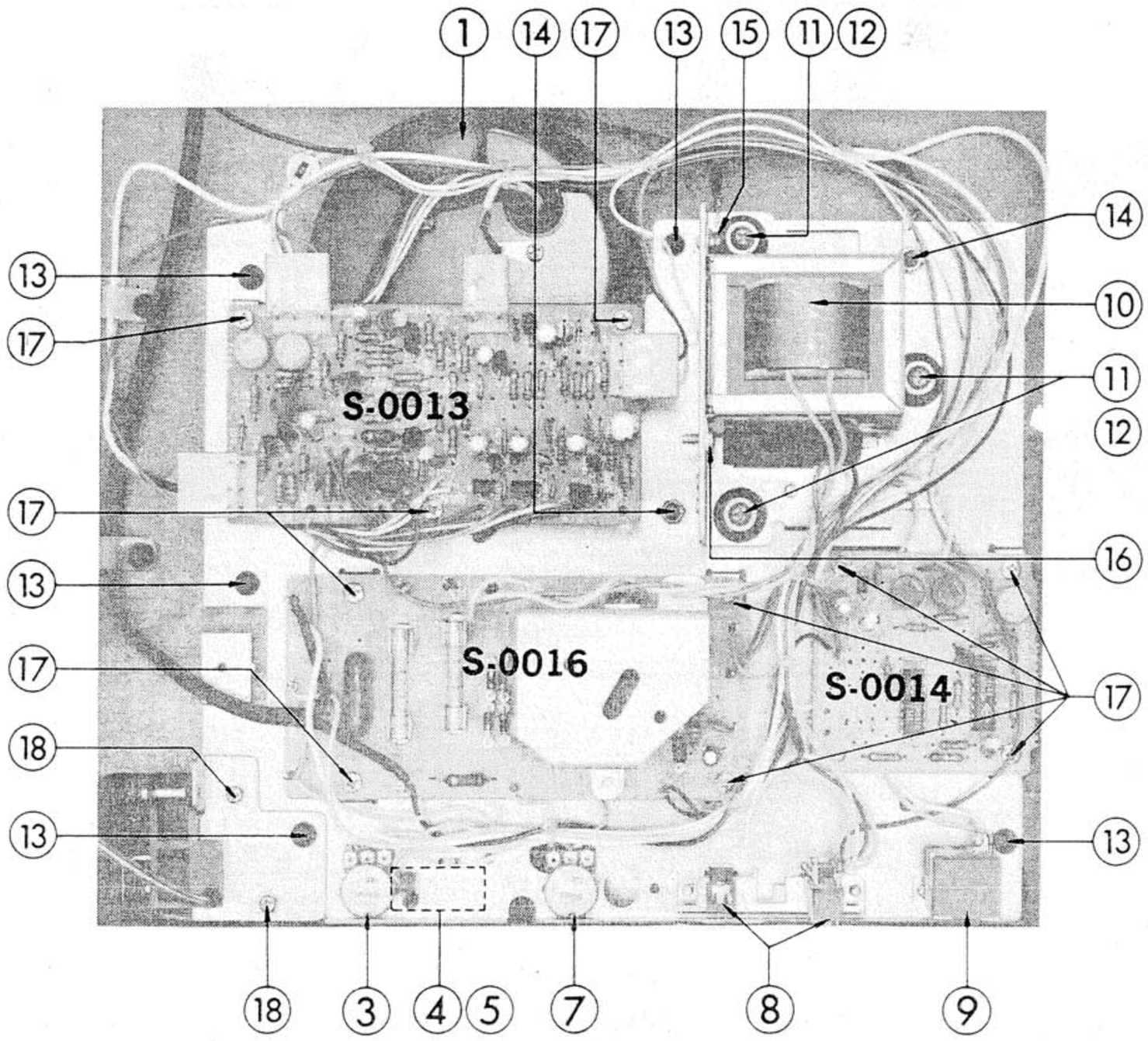

● SR-838 <Bottom View> Fig. 4

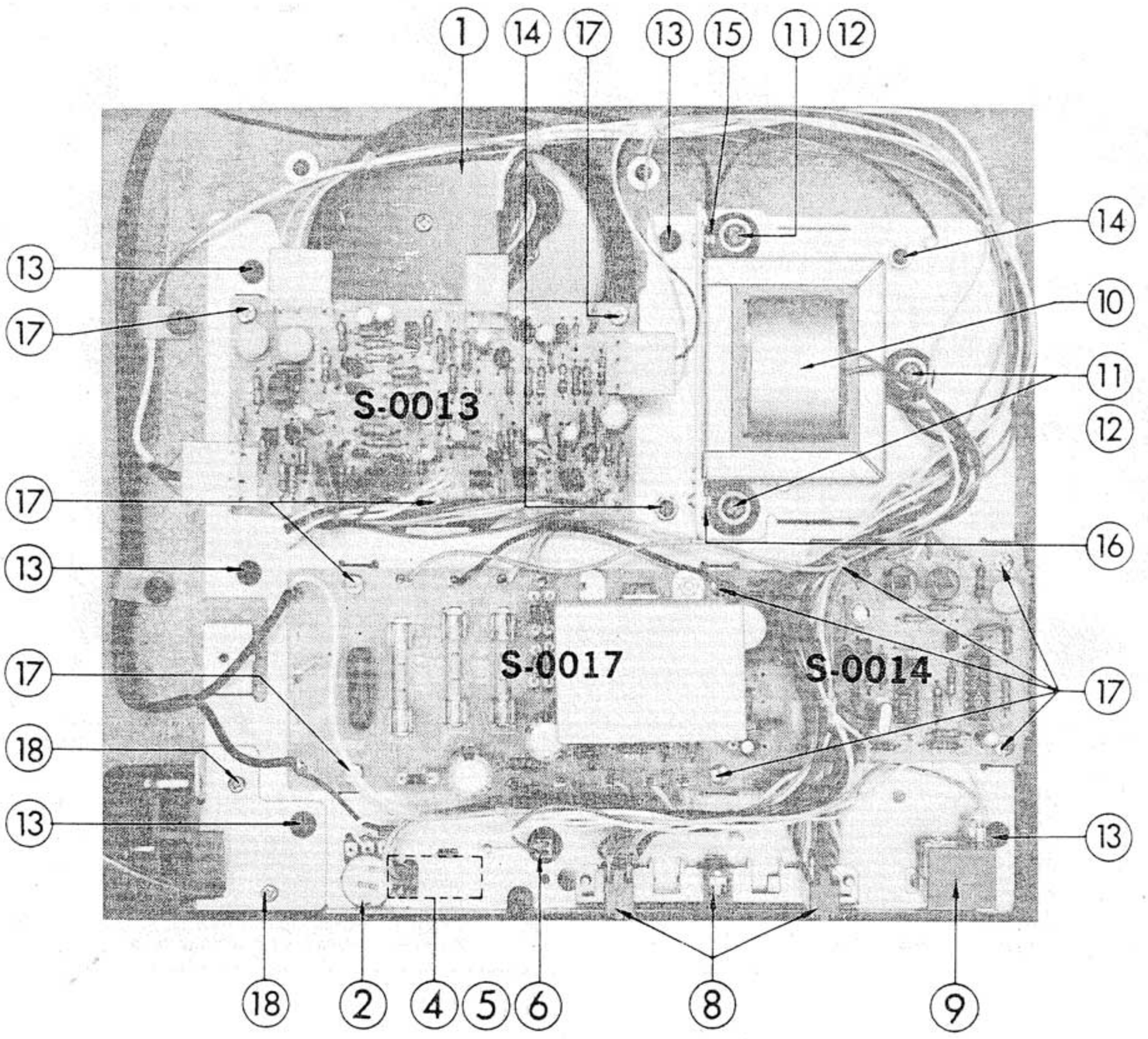

Parts List <SR-636/838 Bottom View>

No.	Parts No.	Stock No.	Description
1		4320540	D.D Motor
2	VR701	1005310	Volume 50kΩB. Pitch Control (SR-838 only)
3	VR745	1005110	Volume 50kΩB. Pitch Control (45 rpm) (SR-636 only)
4	NL701	0410151	Neon Lamp NE-2HUWSA-8
5		5262280	Lamp Holder
6		7595402	L.E.D Board Ass'y (S0021) (SR-838 only)
		2410990	Mini Pin Ass'y
7	VR733	1005310	Volume 50kΩB Pitch Control (33 rpm) (SR-636 only)
8	S702	1131460	Speed Selector Switch (SR-636 only)
		1131470	Speed Selector Switch (SR-838 only)
9	S701	1131230	Power Switch XX, CSA, UL
		1131520	Power Switch EU, BS
10	PT01	4002640	Power Transformar XX (SR-838)
		4002644	Power Transformer EU, BS (SR-838)
		4002642	Power Transformer CSA, UL (SR-838)
		4002630	Power Transformer XX (SR-636)
		4002634	Power Transformer EU, BS (SR-636)
		4002632	Power Transformer UL,CSA (SR-636)
11		5502650	Flowting Rubber, Transformer
12		5162540	WT Type Screw, 3×13, Flowtng Rubber
13		5109905	WT Type Serew, 3×12, Chassis
14		5110261	Hexagon nut M4×3.2, Chassis
15		5107862	BSA Type Serew M4×6, Power Transformer
		512256	TLE Type washer 4φ
16		5109122	BT Type Screw 3×8, Power Transformer
17		5101043	B Type Screw M3×6, Circuit Board
18		5107744	PSB Type Screw M3×6, Lifter Cam Ass'y

◇ Main Parts Replacement

1) Pitch Control VR, Speed Selector SW, PowerSW. Quartz Indicator, Neon Lamp.

A. Pull the Pitch Control VR Knob to remove.
B. Remove the screws No. 13 , No. 18 and Nut No. 14 in Fig. 3, 4.
C. Lift the chassis (Pay attention not to hart the wires)
D. Each Parts is now interchangeable individually.

2) Tone arm Ass'y

A. Loosen the Hox screw beside Lifter mechanical Ass'y, No. 8 in Fig. 5.
B. Take off the Lifter mechanical Ass'y.
C. Remove the shield plate over S-0012.
D. Disconnect the Lead wires solderedon S-0012.
E. Remove the Base Nut No. 7 in Fig. 5.
F. Pull the Tone arm Ass'y upward.

3) Insulators (Rubber Leg on bottom plate)

Since pressure on each insulator differs at each corner, the shape of insulators, spring and fixing screws are different.

In Fig. 5, No. 5 , 9 , 12 indicate insulators.

www.vinylengine.com

3) Bottom View Parts List

Fig. 5

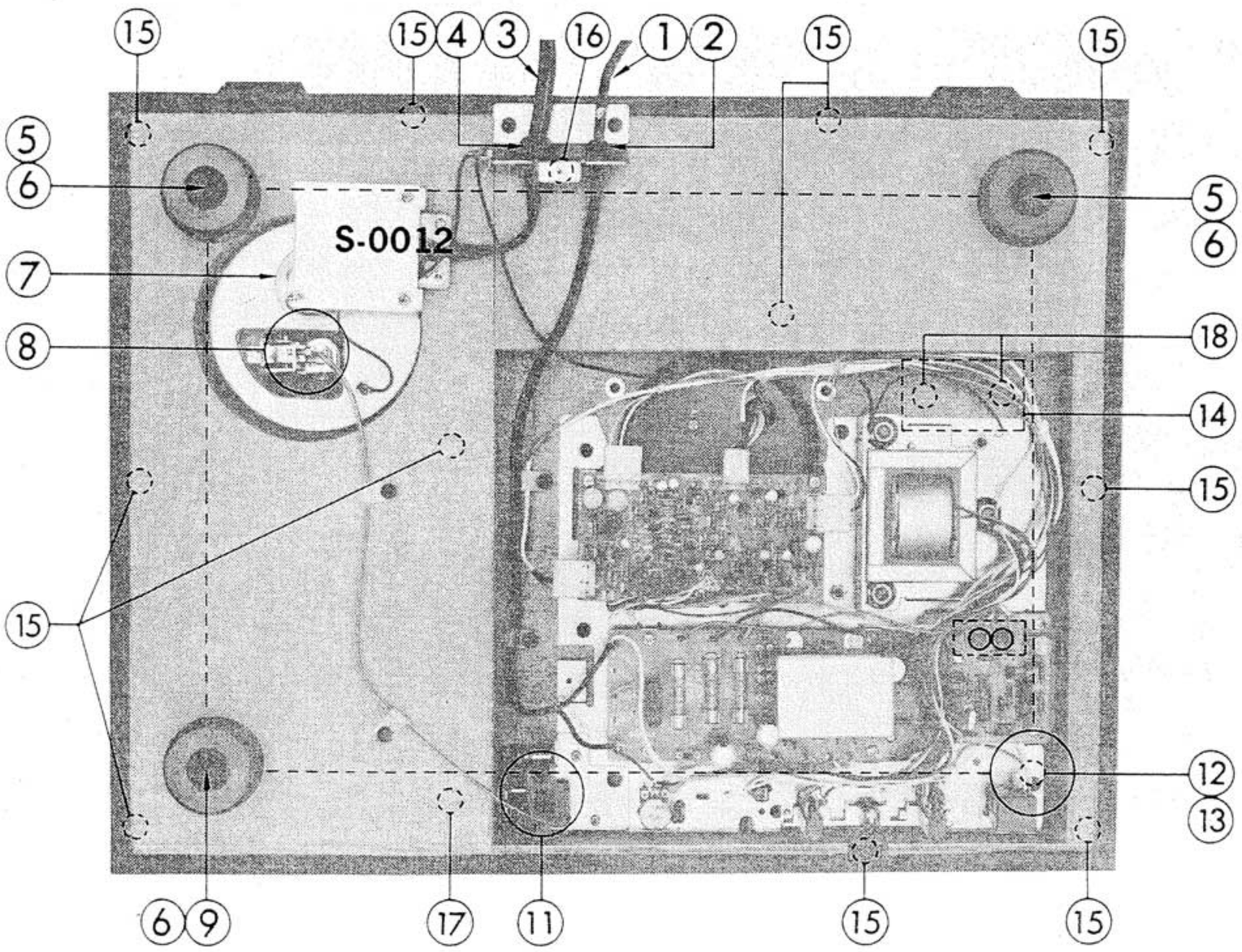

Parts List<SR-636/838 Bottom View>

No.	Parts No.	Stock No.	Description
1		3800420, 1	Power Cord XX, CSA, UL
		3800430	Power Cord BS
2		3910600	Strain Relief (5.2φ), Power Cord
3		3810290	Output Cord
4		3910570	Strain Relief (8.2φ), Output Coard
5		7072040	Insulator (D)
6		5162620	WT Type Screw 3×16, Insulator
7		5172290	Base nut, Arm Base Ass'y
8		7062320	Lifter Mechanical Ass'y
		5242780	Lifter Bracket
		5242760	Lifter Plate
		6903010	Platespring, Lifter
		6903030	Spring, Lifter
9		7072070	Insulator (G)
11		7052400	Lifter Cam Ass'y, (Include control wire)
12		7072030	Insulator (C)
13		5107746	PSB Type Screw, M3×12, Insulator (C)
14		5052120	Selector Cover
15		5108465	WT Type Screw 3×12, Bottom plate
16		5107744	BSB Type Screw M3×6, Bottom plate
17		5108465	PT Type Screw 3×12, Bottom plate
18		5100943	B Type Screw M3×6, Selector Cover

With units sold in U.S.A., Canada and certain European countries, no cartridge is provided.

	Cartridge	Remarks
CSA model	None	Stamped E on carton case
UL model	None	Stamped E on carton case
Audio club	None	Stamped E on carton case
BS model	None	Stamped E on carton case
EU model	None	Stamped E on carton case
XX model	SV-43	No marks on carton case

4. PACKING LIST

No.	Parts No.	Stock No.	Description
1		9012280	Protector Sheet, upper
2		7012150	Dust Cover
3		9112220	Polyethylene Bag
4		9012300	Protector Sheet, turntable
5		5502741	Rubber Mat EU, CSA, BS
		5502851	Rubber Mat XX, UL
6		6112191	Turntable (Platter), (SR-636 only)
		6112202	Turntable (Platter), (SR-838 only)
7		9112210	Polyethylene Bag, turntable
8			Turntable Unit
9		9112210	Polyethylene Bag, turntable unit
10		9082093	Stylofoam Packing, front
11		9082102	Stylofoam Packing, back
13		9002680	Carton Case (SR-838 only)
		9002760	Carton Case (SR-636 only)
14		5996080	Curl Stopper

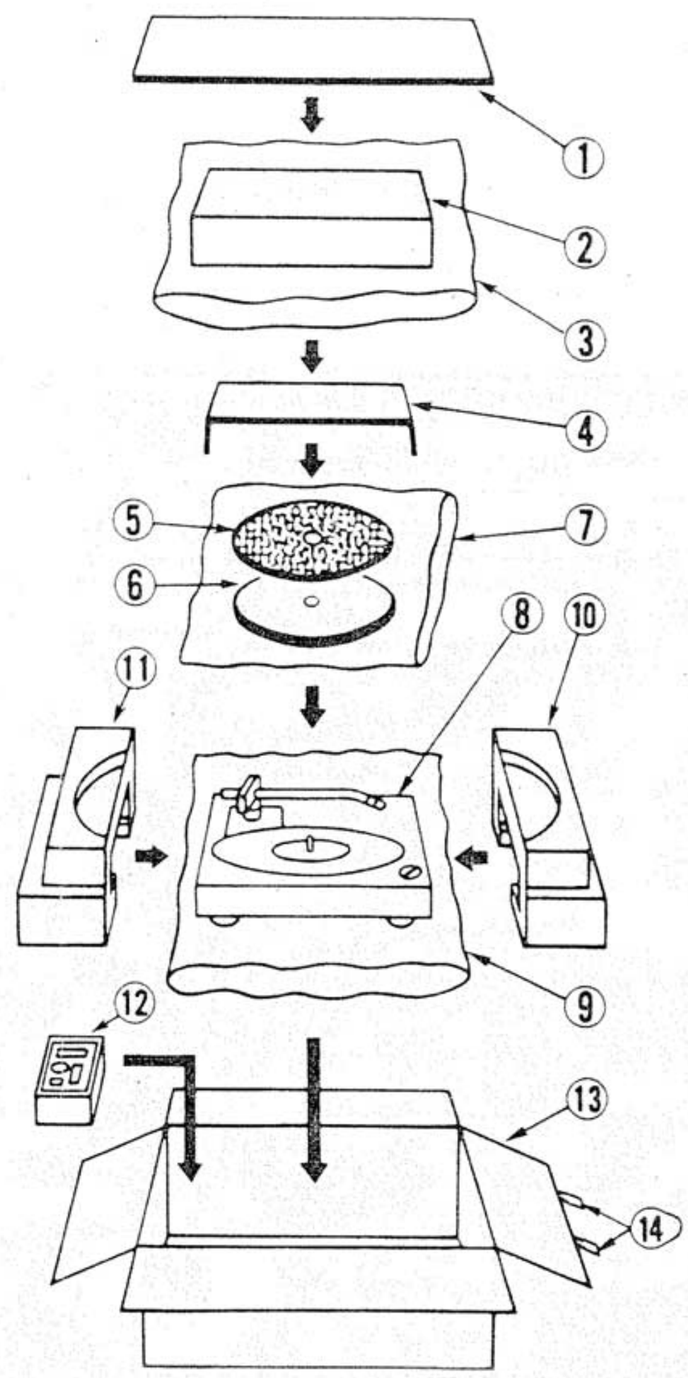

5. ACCESSORY PARTS LIST

No.	Parts No.	Stock No.	Description
1		5192082	Hexagon Wrench
2		9406022	Polishing Cloth
3		9203050	Operating Instruction (SR-838)
		9203580	Operating Instruction (SR-636)
4		9234140	Schematic Diagram (SR-838)
		9232180	Schematic Diagram (SR-636)

www.vinylengine.com

6. PARTS LOCATION & PARTS LIST

Since some of capacitors and resistors are omitted from parts lists in this Service Manual, refer to the common parts list for capacitors & resistors which was appended previously to each Sansui Manual.

1) S-0013 Motor Control Circuit Board (Stock No. 7595771 SR-636/SR-838)

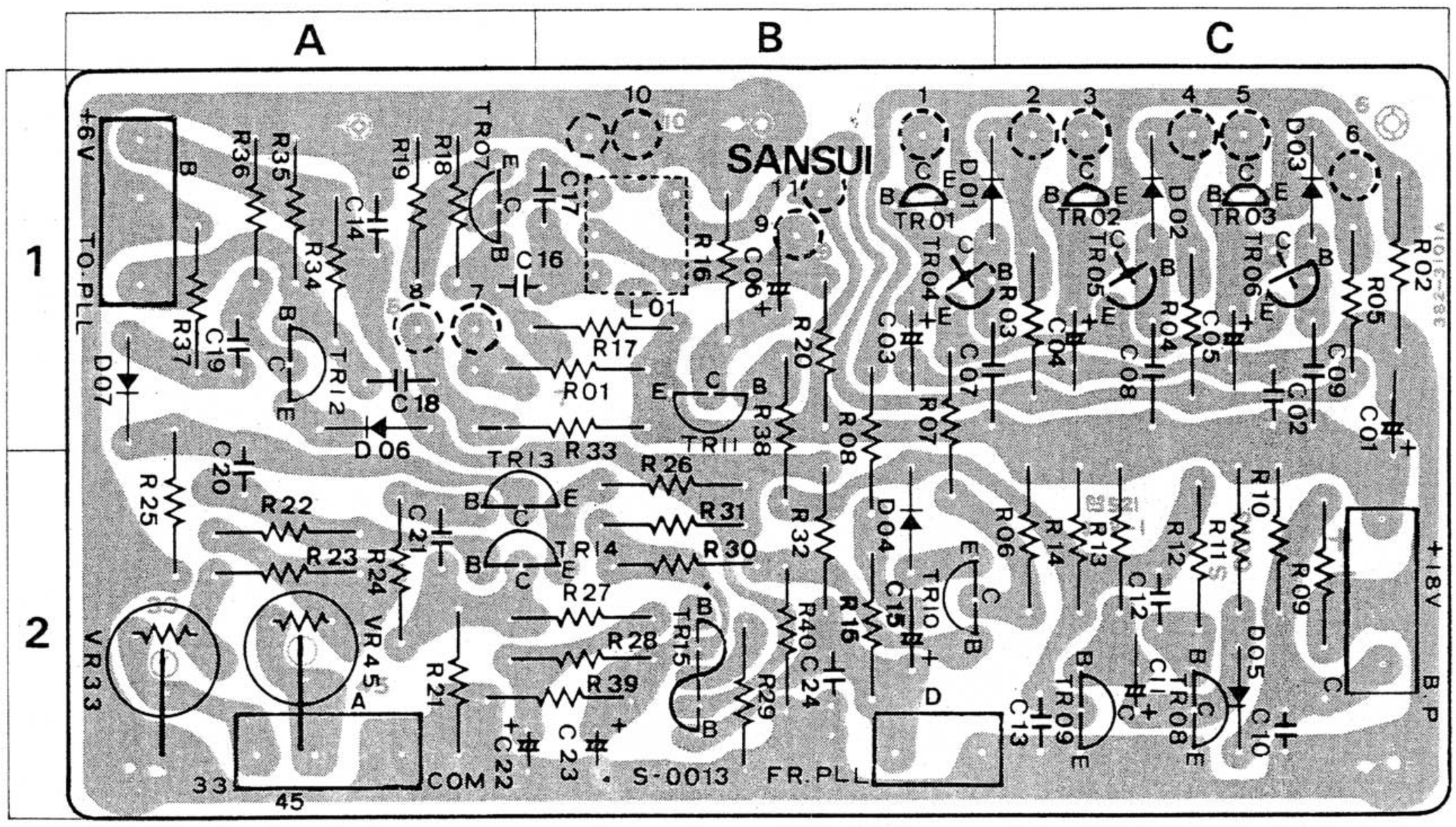

Parts List

Parts No.	Stock No.	Description	Position
TR01~03	0308590~2	2SD471 (M, L, K) Transistor	1B, 1C
TR04~06	0300680, 1	2SA733 (P, Q) Transistor	1B, 1C
TR07~09	0305951~3	2SC945 (Q, P, K) Transistor	1A, 1C
TR10	0305952	2SC945 (P) Transistor	2B
TR11, 12	0300680, 1	2SA733 (P, Q) Transistor	1B, 1A
TR13, 14	0300680	2SA733 (P) Transistor	2A
TR15		2SC1583 (G) Transistor	2B
D01~07	0311050	1S953 Diode	1B
C02	0656223	22000pF 25V C.C.	1C
C10	0656223	22000pF 25V C.C.	2C
C14	0656223	22000pF 25V C.C.	1A
C20	0625103	10000pF 50V P.C.	2A
C24	0656223	22000pF 25V C.C.	2B
R01	0200821	820Ω ½W N.I.R.	
	0200102	1kΩ ½W N.I.R.	
	0200122	1.2kΩ ½W N.I.R.	
	0200152	1.5kΩ ½W N.I.R.	
	0200182	1.8kΩ ½W N.I.R.	1B
R01	0200222	2.2kΩ ½W N.I.R.	
	0200272	2.7kΩ ½W N.I.R.	
	0200332	3.3kΩ ½W N.I.R.	
R02	0200229	2.2Ω	1C
VR33	1035190	100kΩ (B)	2A
VR45	1035190	100kΩ (B)	2A
L01	4220700	OSC Coil	1B
LD01	0319140	SR106C L.E.D.	
TR20	0390010	PH101 Transistor	

2) S-0014·PLL Servo Circuit Board (Stock No. 7595371 SR-636) (Stock No. 7595381 SR-838)

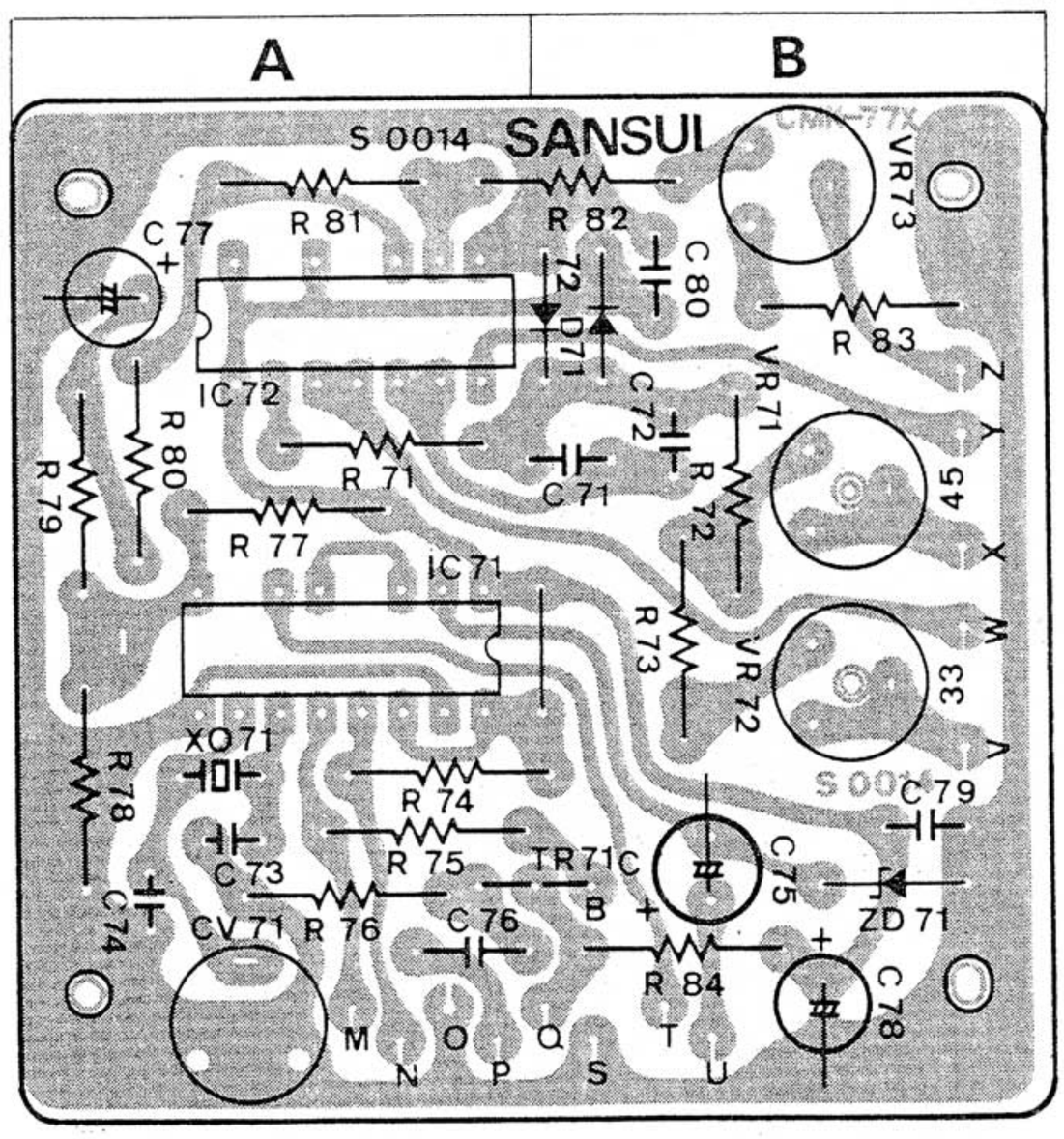

Parts List <SR-636>

Parts No.	Stock No.	Description	Position
IC71	0360560	MSM5810 IC	A
IC72	0360570	MSM4069 IC	A
ZD71	0315770	EQA01-06S Zener Diode	B
C79~80	0657223	22000pF 50V C.C.	B
R72	0231334	330kΩ ½W M.R.	
R73	0231154	150kΩ ½W M.R.	
VR71, 72	1034360	330kΩ (B)	B
VR73	1035150	22kΩ (B)	B

Parts List <SR-838>

Parts No.	Stock No.	Description	Position
TR71	0305951~3	2SC945 (Q.P.K) Transistor	A, B
IC71	0360560	MSM5810 IC	A
IC72	0360570	MSM4069 IC	A
D71, 72	0311050	1S953 Diode	B
ZD71	0315770	EQA01-06S Zener Diode	B
C73	0661220	22pF 50V C.C.	A
C74	0669210	10pF 50V C.C.	A
C79, 80	0657223	22000pF 50V C.C.	B
R72	0231334	330kΩ ½W M.R.	
R73	0231154	150kΩ ½W M.R.	
VR71, 72	1034360	330kΩ (B)	B
VR73	1035150	22kΩ (B)	B
TC71	1230060	Trimmer Capacitor	
XO71	0930020	Quartz-element	A

www.vinylengine.com

3) S-0016 Power Supply Circuit Board (Stock No. 7502461 XX, 7502463 EU, 7502464 CSA, 7002468 UL, 7502469 BS) (SR-636 only)

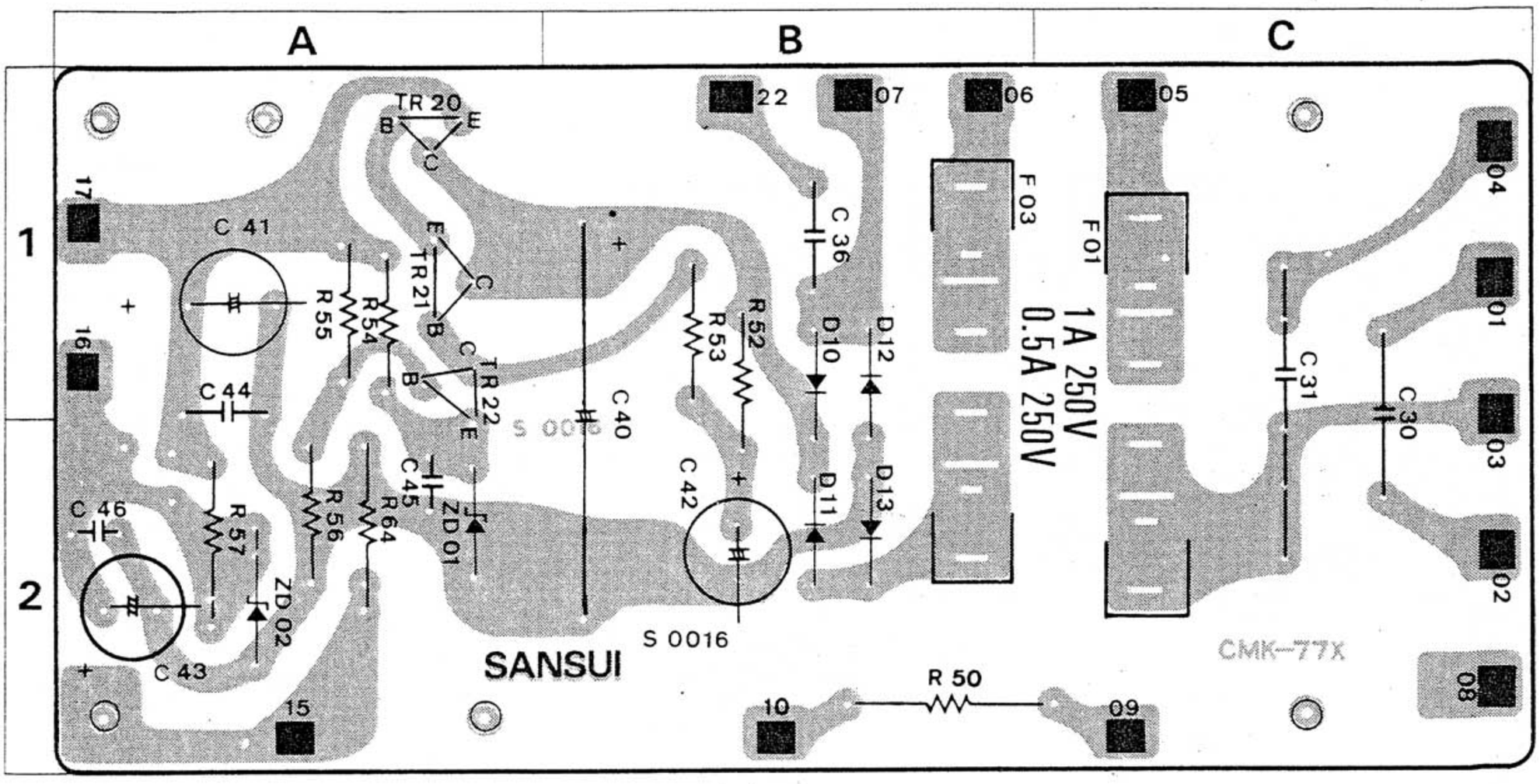

Parts List

Parts No.	Stock No.	Description	Position
TR20	0308391-3	2SD313AL (D, E, F) Transistor	1 A
TR21	0305951-3	2SC945 (Q, P, K) Transistor	1 A
TR22	0306070-2	2SC1313 (F, G, H) Transistor	1 A
D10-13	0310340	10D1 Diode	1, 2 B
ZD01	0316630	RD5.1E Zener Diode	2 A
ZD02	0315580	EQB01-07 Zener Diode	2 A

Parts No.	Stock No.	Description	Position
C31	0605337	0.033μF 250V M.C.	1 C
C40	0505471	470μF 50V E.C.	1, 2 B
C44	0656473	47000μF 25V C.C.	1 A
C45, 46	0657223	22000μF 50V C.C.	2 A
R50	0211333	33kΩ 1 W N.I.R. EU, BS.	2 B
	0211123	12kΩ 1 W N.I.R. XX, CSA, UL	

Parts No.	Stock No.	Description	Position
R57	0211391	390Ω 1 W N.I.R.	2 A
F01	0432210	0.5A 250V AC Fuse XX, CSA, UL.	1, 2 C
		80mA 250V AC Fuse EU, BS.	
F03	0432220	1A 250V AC Fuse XX, CSA, UL.	1, 2 B
	0435090	800mA 250V AC Fuse EU, BS.	

4) S-0017 Power Supply Circuit Board (Stock No. 7502441 XX, 7502443 EU, 7502444 CSA, 7502448 UL, 7502449 BS) (SR-838 only)

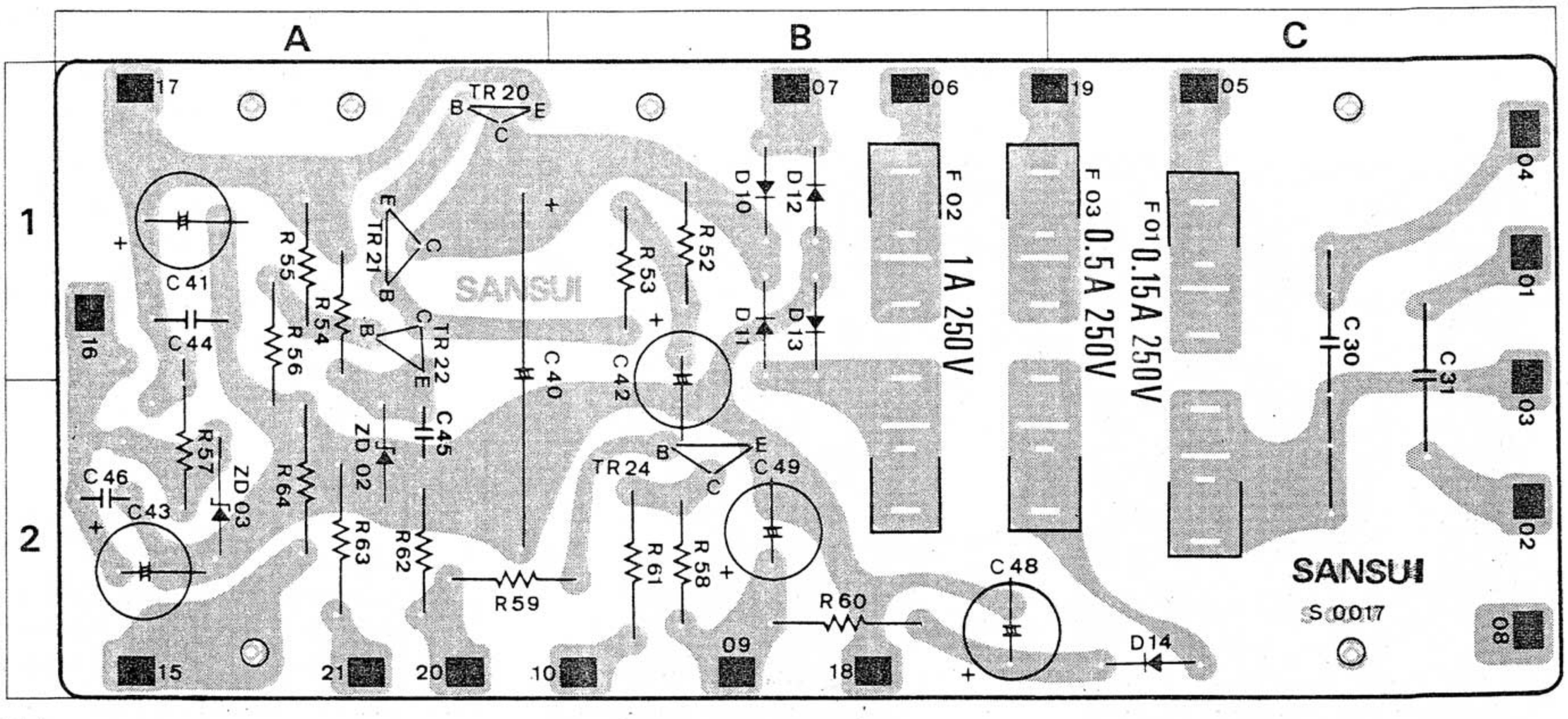

Parts List

Parts No.	Stock No.	Description	Position
TR20	0308391-3	2SD313AL (D, E, F) Transistor	1 A
TR21	0305951-3	2SC945 (Q, P, K) Transistor	1 A
TR22	0306070-2	2SC1313 (F, G, H) Transistor	1 A
TR24	0306521, 2	2SC-1439-BV (B, V) Transistor	2 B
D10-13	0310340	10D1 Diode	1 B
D14	0310350	10D2 Diode	2 C
ZD01	0316630	RD5.1E Zener Diode	

Parts No.	Stock No.	Description	Position
ZD02	0315580	EQB01-07 Zener Diode	2 A
C31	0603337	0.033μF 125V M.C.	1, 2 C
C40	0505471	470μF 50V E.C.	1, 2 A
C44	0656473	47000pF 25V C.C.	1 A
C45, 46	0657223	22000pF 50V C.C.	2 A
C48, 49	0518100	10μF 160V E.C.	2 B
R57	0200391	390Ω ½W N.I.R.	2 A

Parts No.	Stock No.	Description	Position
R60	0211122	1.2kΩ 1 W N.R.	2 B
R61	0211472	4.7kΩ 1 W N.R.	2 B
F01	0432210	0.5A 250V AC Fuse XX, UL.CSA.	1, 2 C
	0435070	500mA 250V AC Fuse EU, BS.	
F02	0432220	1A 250V AC Fuse XX, UL.CSA.	1, 2 B
	0435090	800mA 250V AC Fuse EU, BS.	
F03	0432170	0.15A 250V AC Fuse XX, UL, CSA	
	0435020	160mA 250V AC Fuse EU, BS.	

www.vinylengine.com

7. SCHEMATIC DIAGRAM/1) SR-636

* La présentation et les spécifications sont susceptibles d'éter modifiées sans préavis par suites d'améliorations éventuelles.
* Änderungen, die dem technischen Fortschritt dienen, bleiben vorbehalten.
* Design and specifications subject to change without notice for improvements.

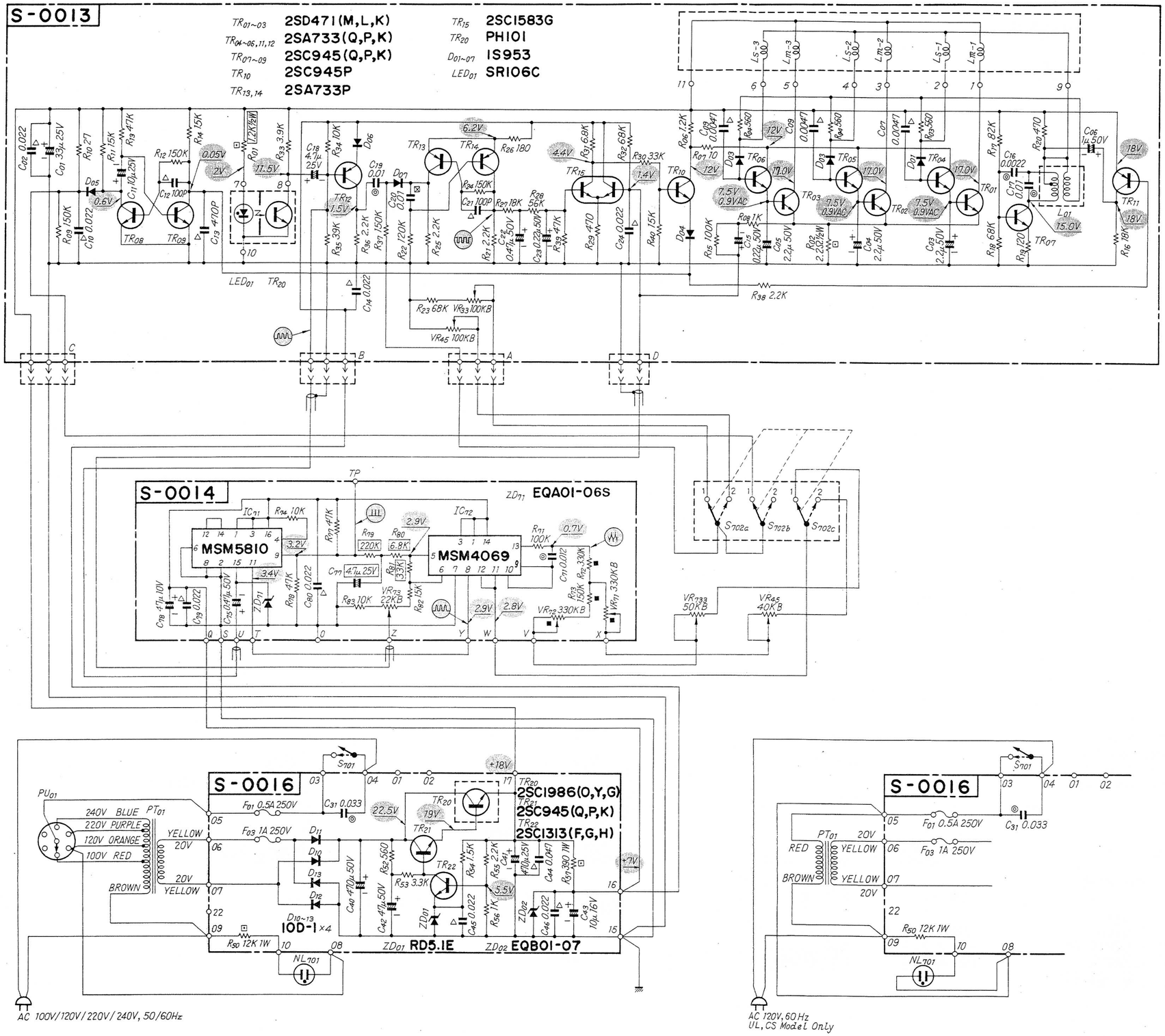

SWITCHS & CONTROLS

S_{701} POWER SW
S_{702a} F.G. SPEED SELECTOR
1. 33⅓r.p.m 2. 45r.p.m
S_{702b} BRAKE CONTROL
1. ON 2. OFF
S_{702c} P.L.L. SPEED SELECTOR
1. 33⅓r.p.m 2. 45r.p.m
VR_{733} 33⅓r.p.m P.L.L. SPEED ADJ. (FINE)
VR_{745} 45 r.p.m P.L.L. SPEED ADJ. (FINE)
VR_{72} 33⅓r.p.m P.L.L. SPEED ADJ. (ROUGH)
VR_{71} 45 r.p.m P.L.L. SPEED ADJ. (ROUGH)
VR_{33} 33⅓r.p.m F.G. SPEED ADJ.
VR_{45} 45 r.p.m F.G. SPEED ADJ.
VR_{73} P.L.L. OUTPUT VOLTAGE ADJ.

CAPACITORS
Are in μF, Unless Otherwise Noted.
△ CERAMIC ◎ MYLAR ⊠ STYROL ▭ ADJ.
⊗ TANTALUM ELECTOROLYTIC

RESISTORS
Are in ohms, 1/4 Watts, ± 5% Tolerance
Unless Otherwise Noted. K: kΩ
■ METAL FILM RESISTOR
⊡ NON-INFLAMMABLE RESISTOR
▭ ADJ.

Each D.C. Voltage measured by the instruments described below shows the nominal value in volts at 33⅓rpm.
Measuring instruments
Volt Meter DC20kΩ/V, AC1kΩ/V
Oscilloscope 5MHz

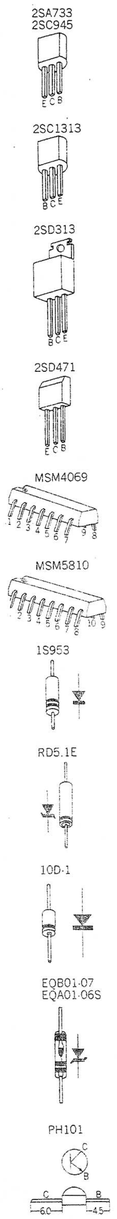

2) SR-838

*La présentation et les spécifications sont susceptibles d'êter modifiées sans préavis par suites d'améliorations éventuelles.
*Anderungen, die dem technischen Fortschritt dienen, bleiben vorbehalten.
*Design and specifications subject to change without notice for improvements.

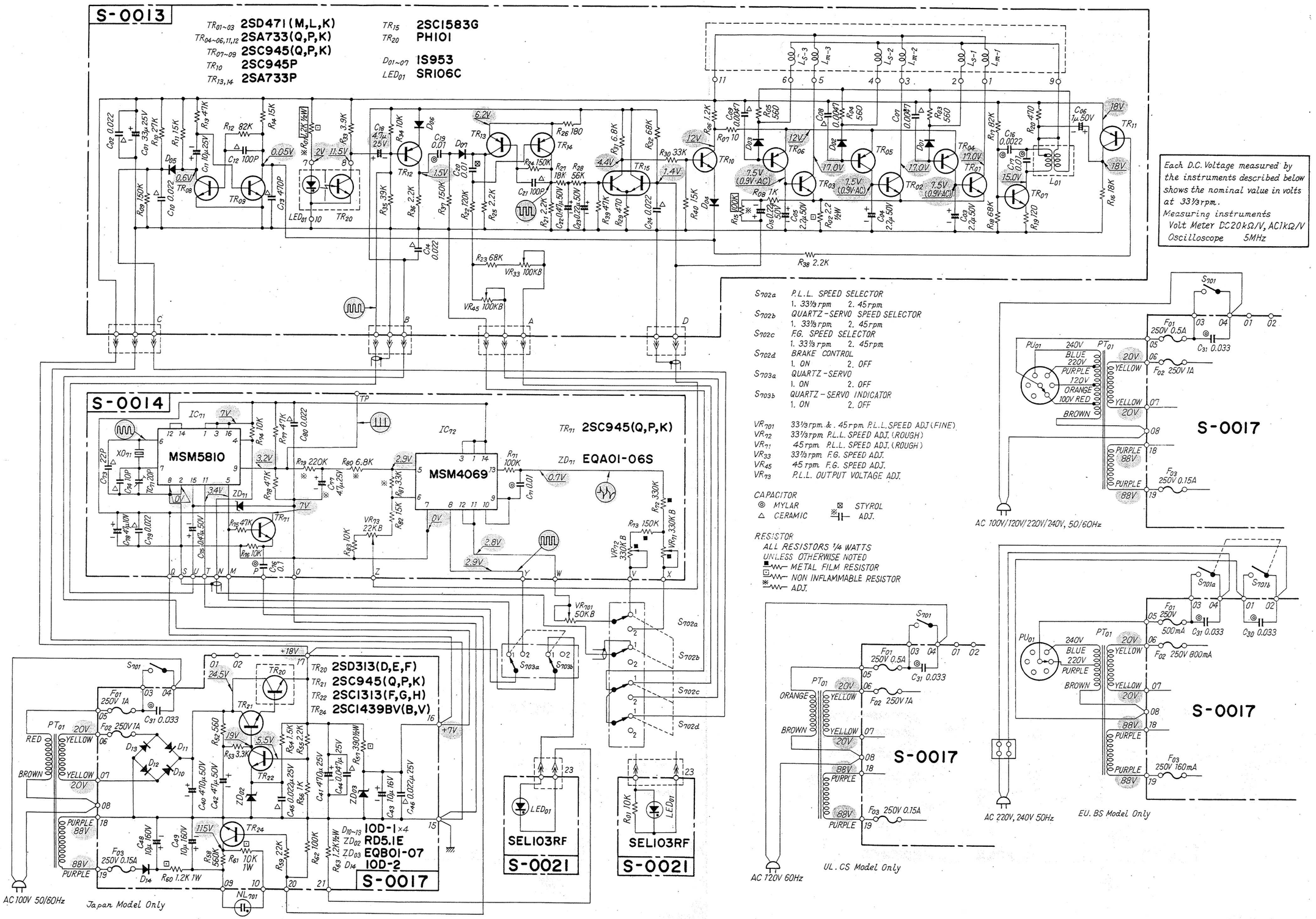

Each D.C. Voltage measured by the instruments described below shows the nominal value in volts at 33⅓rpm.
Measuring instruments
Volt Meter DC20kΩ/V, AC1kΩ/V
Oscilloscope 5MHz

S702a P.L.L. SPEED SELECTOR
1. 33⅓rpm 2. 45rpm
S702b QUARTZ-SERVO SPEED SELECTOR
1. 33⅓rpm 2. 45rpm
S702c F.G. SPEED SELECTOR
1. 33⅓rpm 2. 45rpm
S702d BRAKE CONTROL
1. ON 2. OFF
S703a QUARTZ-SERVO
1. ON 2. OFF
S703b QUARTZ-SERVO INDICATOR
1. ON 2. OFF

VR701 33⅓rpm. & 45rpm. P.L.L. SPEED ADJ.(FINE)
VR72 33⅓rpm. P.L.L. SPEED ADJ.(ROUGH)
VR71 45rpm. P.L.L. SPEED ADJ.(ROUGH)
VR33 33⅓rpm. F.G. SPEED ADJ.
VR45 45rpm. F.G. SPEED ADJ.
VR73 P.L.L. OUTPUT VOLTAGE ADJ.

CAPACITOR
◎ MYLAR ⊠ STYROL
△ CERAMIC ⅋ ADJ.

RESISTOR
ALL RESISTORS 1/4 WATTS
UNLESS OTHERWISE NOTED
METAL FILM RESISTOR
NON INFLAMMABLE RESISTOR
ADJ.

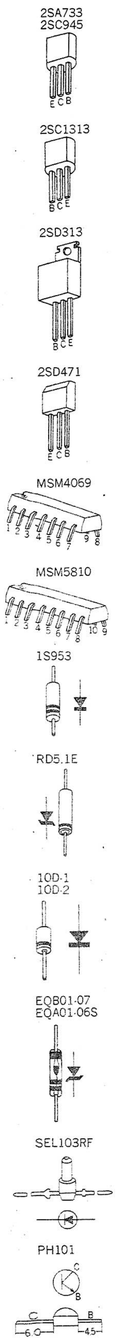

8. ADJUSTMENTS

1) SR-838

Please complete these adjustment below when replacing volumes, C, R, and ICs or when the strobo marking pattern would not synchronize despite of turning the adjustment knob on panel. For this adjustment, see the unit horizontally and mount the turntable platter.

A. Adjustment with oscilloscope

STEP	SELECTOR SW	QUARTZ SW	ADJUST	ADJUST FOR	REMARKS
1	33-1/3	ON	VR73 (S0014)	Strobo marking pattern appears to standstill.	
2	33-1/3	ON	VR33 (S0013)	Set the waveform on oscilloscope to adjusted one as Fig. 2.	Connect oscilloscope as Fig. 1.
3	45	ON	VR45 (S0013)	Same as above	Same as above
4	33-1/3	OFF	VR701 (control knob on panel)	Center Position	
5	33-1/3	OFF	VR72 (S0014)	Strobo marking pattern appears to standstill.	
6	45	OFF	VR71 (S0014)	Same as above	

B. Adjustment without oscilloscope

If unable to adjust when QUARTZ switch is turned OFF, complete adjustment (A) instead of (B).

STEP	SELECTOR SW	QUARTZ SW	ADJUST	ADJUST FOR	REMARKS
1	33-1/3	ON	VR73 (S0014)	Strobo marking pattern appears to standstill.	
2	33-1/3	ON	VR33 (S0013)	DC 1.4V	Connect a voltmeter to D terminal on S0013 (Fig. 1).
3	45	ON	VR45 (S0013)	DC 1.4V	Same as above
4	33-1/3	OFF	VR701 (Control knob on panel)	Center position	
5	33-1/3	OFF	VR72 (S0014)	Strobo marking pattern appears to standstill.	
6	45	OFF	VR71 (S0014)	Same as above	

Fig. 1

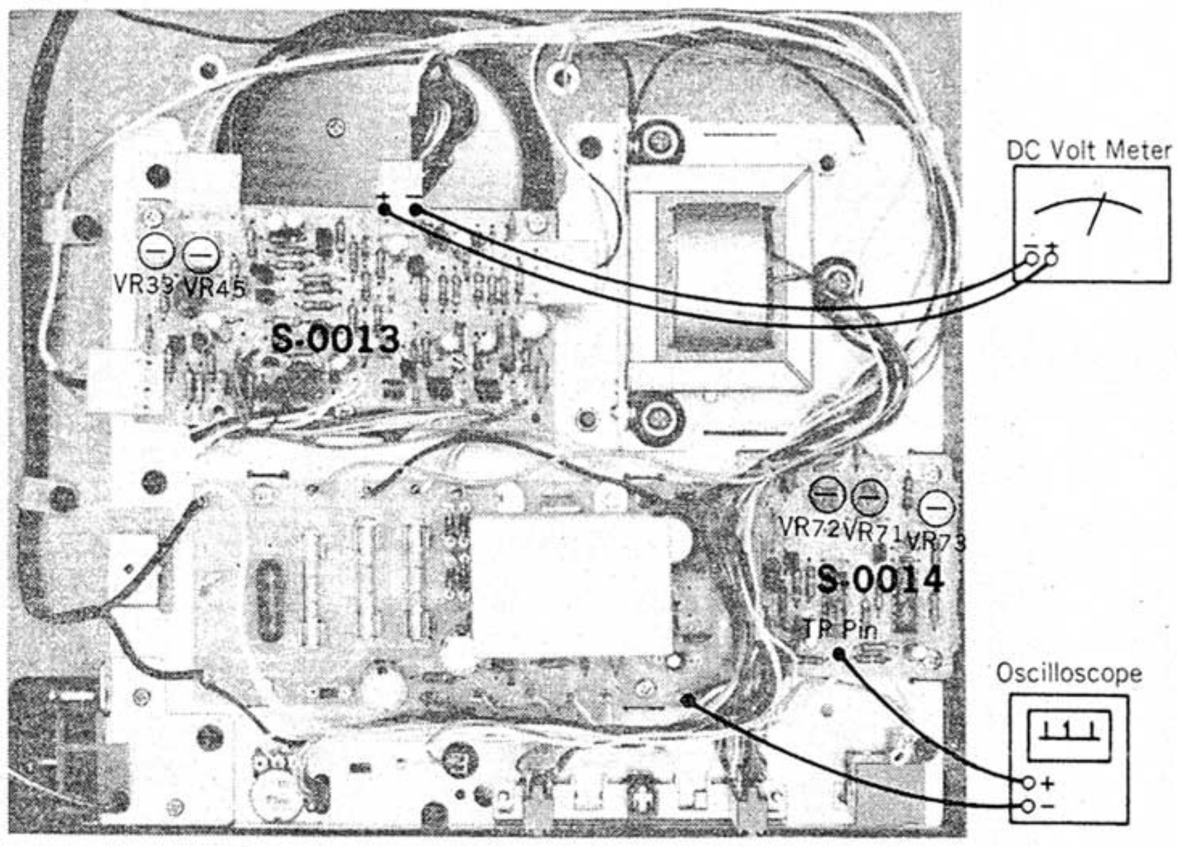

Fig. 2

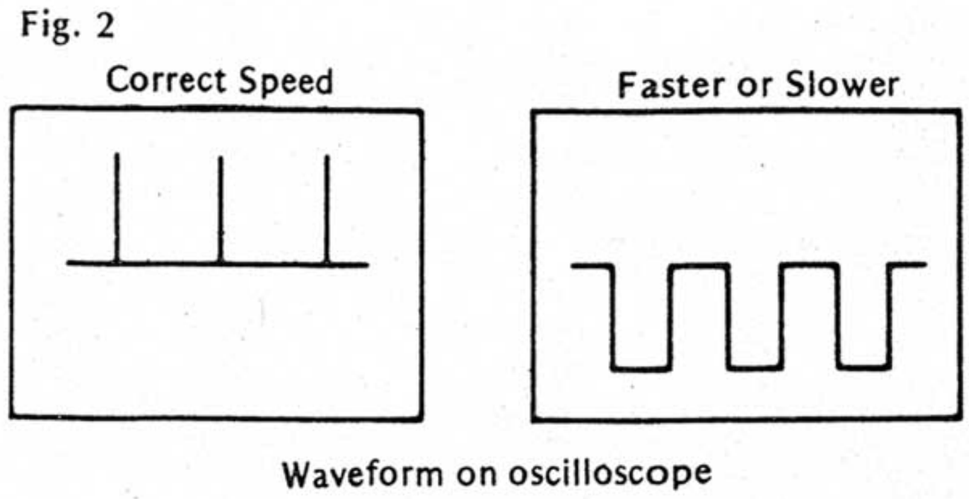

www.vinylengine.com

2) SR-636

For adjustment, set the unit horizontally and attach the turntable platter.

A. Adjustment in case of replacing Parts except IC MSM4069, R71, R72, R73, C71, C72, VR71, VR72, VR733 and VR745 on circuit board S0014.

1) Adjustment with oscilloscope

STEP	SELECTOR SW	ADJUST FOR	ADJUST FOR	REMARKS
1	33-1/3	VR73 (S0014)	Storobo marking pattern appears to standstill.	
2	33-1/3	VR33 (S0013)	Set the waveform on oscilloscope to adjusted one as Fig. 2.	Connect oscilloscope as Fig. 1.
3	45	VR45 (S0013)	Same as above	Same as above

2) Adjustment without oscilloscope

STEP	SELECTOR SW	ADJUST FOR	ADJUST FOR	REMARKS
1	33-1/3	VR73 (S0014)	Storobo marking pattern appears to standstill.	
2	33-1/3	VR33 (S0013)	DC 1.4V	Connect a volt meter to D terminal on S0013 (Fig. 1).
3	45	VR45 (S0013)	DC 1.4V	Same as above

B. Adjustment in case of replacing some from parts of IC MSM 4049, R71, R72, R73, C71, C72, VR71, VR72, VR733 and VR745 on circuit board S0014.

STEP	SELECTOR SW	ADJUST	ADJUST FOR
1	33-1/3	VR733, VR745 (Control knob on panel)	Center position
2	33-1/3	VR72 (S0014)	Storobo marking pattern appears to standstill.
3	45	VR71 (S0014)	Same as above

Sansui

SANSUI ELECTRONICS CORPORATION: 55-11 Queens Blvd. Woodside, N.Y 11377 U.S.A.
333 West Alondra Blvd. Gardena, California 90247 U.S.A.
3036 Koapaka St. Honolulu, Hawaii 96819 U.S.A.
SANSUI AUDIO EUROPE N.V.: North Trade Bldg (9th floor) Noorderlaan 133-Bus 1,2030 Antwerp, Belgium
SANSUI AUDIO EUROPE S.A.: Arabella center, 6 Frankfurt AM Main, Lyoner Strasse 44-48, West Germany
SANSUI ELECTRIC COMPANY LTD.: 14-1, Izumi 2-chome, Suginamiku, Tokyo 168 Japan PHONE: (03) 323-1111/TELEX:232-2076

SM080

Printed in Japan (870230M)

www.vinylengine.com