SANYO

SANYO
4 CHANNEL STEREO RECEIVER
DCX 3250K
SERVICE MANUAL

A PRODUCT OF SANYO ELECTRIC INC.

SPECIFICATIONS

GENERAL

Transistors	2SK41 x 1, 2SC668 x 1, 2SC930 x 4 2SC929 x 1, 2SC536 x 10, 2SC693 x 14 2SC537 x 12, 2SC876 x 1,
IC	LA1201 x 1, LA3301 x 1, STK016 x 4 LD3120 x 2,
Diodes	1S188 x11, DS442 x 1 DS430 x 4 SZ-9 x 1, G2-B x 4
Power source	AC 117V 60 Hz
Power consumption	250 watts
Dimensions (approx.)	526 (W) x 370 (D) x 165 (H) mm
Weight (approx.)	11.0 kg

FM TUNER SECTION

Frequency range	88 MHz - 108 MHz
IF	10.7 MHz
Antenna impedance	300 ohms balanced
IHF sensitivity	5 μV
Selectivity (IHF)	40 dB
Image rejection	45 dB
IF rejection	75 dB
AM suppression	60 dB
S/N	Mono . . . 65 dB Stereo . . 55 dB
Stereo separation	33 dB (1 kHz)
SCA rejection	50 dB
Capture ratio	3 dB

AM TUNER SECTION

Frequency range	535 kHz - 1,605 kHz
IF	455 kHz
20 dB S/N sensitivity	150 μV/m
Image rejection	40 dB
IF rejection	30 dB
S/N	45 dB
Selectivity	30 dB

AUDIO AMPLIFIER SECTION

Continuous power output (8 ohms, 1% THD)	2 channel operation . . . . . 25 W x 2 4 channel operation . . . . . 10W x 4
Frequency response (AUX) (1 watt power output)	10-30,000 Hz ±3 dB
Hum and noise	AUX. . . . 20 mV (volume position: At rated power) PHONO . 20 mV Volume min . . . .1.5 mV
Input sensitivity/impedance	MIC . . . . 2.5 mV/50 k Ω AUX . . . 150 mV/100 kohms PHONO . 2.5 mV/50 kohms TAPE P.B RCA . . . 150 mV/50 kohms DIN . . . . 150 mV/50 kohms
Record output(30% FM mod.)	RCA . . . 150 mV/10 kohms DIN . . . . 35 mV/50 kohms
Bass control	100 Hz ±10 dB
Treble control	10,000 Hz ±10 dB
Harmonic Distortion	1.0% at Rated power output
Power Bandwidth (IHF)	
4 channel driver	20 ~ 20,000 Hz
2 channel driver	20 ~ 35,000 Hz
Loudness control	100 Hz + 10 dB ((VOLUME: at - 30 dB) 10 KHz + 5 dB
Speaker terminal impedance	8Ω

DIAL CORD STRING

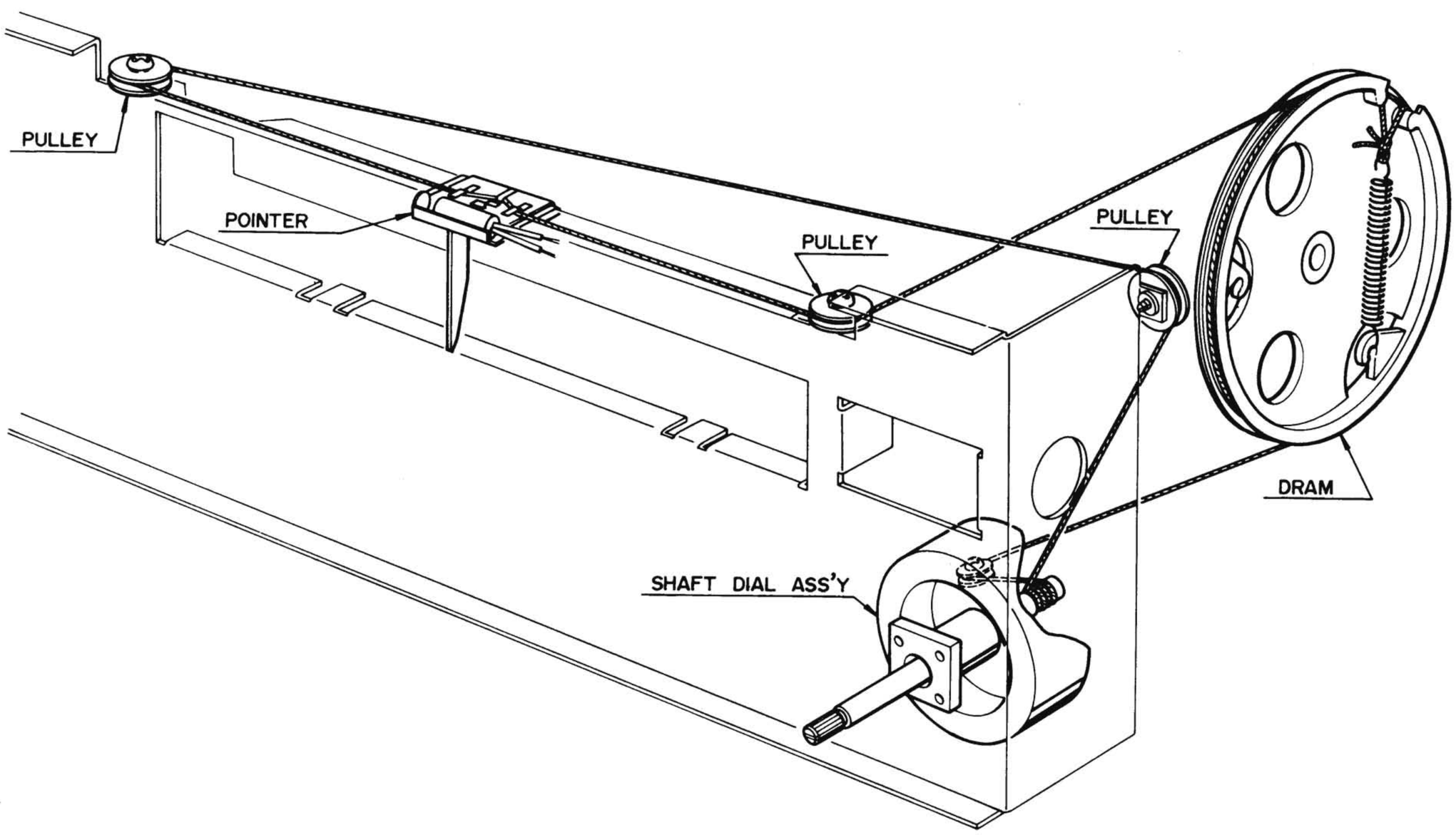

ADJUSTMENT

AM ADJUSTMENT

Step	Adjusting circuit	Connections		SG. frequency	Position of tuning dial	Adjustment	V.T.V.M. Oscilloscope
		Input	Output				
1	IF	Connect sweep generator to VC4.	Connect oscilloscope to test point TP2.	455 KHz	Near max. capacity of VC. at position with no unrequired signal.	AM 1st 9-20970 (Red, Blue) AM 2nd 9-20980 (Non adj.)	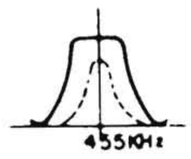
2	RF	Connect standard loop antenna to output terminals of SG. Place reciever 2 feet from loop antenna.	Connect V.T.V.M. to speaker terminals.	600 KHz (400Hz, 30% modulation)	600 KHz	AM ANT 9-20980 AM OSC 9-20700 (Red)	Max.
3				1400 KHz (400Hz, 30% modulation)	1400 KHz	TC4 TC5	Max.
4	Repeat adjustments.						

PREPARE

1. Variable capacitor completely closed.
2. Set the dial pointer to very left line dial scale.
3. Connect sweep generator. SG, V.T.V.M. and oscilloscope.
4. Function switch to "AM".
5. Use a screwdriver with plastic grip for all adjustments.

FM ADJUSTMENT

Step	Adjusting circuit	Connections		SG frequency	Position of tuning dial	Adjustment	V.T.V.M. Oscilloscope
		Input	Output				
1	IF	Connect sweep generator to test point TP1 through 0.01μF	Connect oscilloscope to test point TP3.	10.7 MHz (none modulation)	Near max. capacity of VC. at position with no unrequired signal.	FM 1st 9-20890 (Violet) 9-20900 (Orange)	
2	Ratio Det.		Connect oscilloscope to test point TP4.			FM DET 9-20850 (Pink) 9-20860 (Blue)	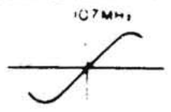
3	RF	Connect FM SG. to FM ANT. terminals.	Connect V.T.V.M. to speaker terminal.	90 MHz (400Hz, 30% modulation)	90 MHz	FM ANT 9-20990 FM OSC 9-20460 FM RF 9-20270	Max.
4				106 MHz (400Hz, 30% modulation)	106 MHz	TC1 TC2 TC3	Max.
5	Repeat adjustments.						

PREPARE

1. Variable capacitor completely closed.
2. Set the dial pointer to very left line of dial scale.
3. Connect sweep generator, FM SG, V.T.V.M. and oscilloscope. FM antena input impedance is 300 ohm.
4. Function switch to "FM"
5. Use a screwdriver with plastic grip for all adjustments.

FM MPX ADJUSTMENT

Step	Adjusting circuit	Connections		Position of tuning dial	Adjustment	V.T.V.M.
		Input	Output			
1	SCA signal filter (67 KHz)	Add SCA signal to FM stereo SG. and connect to FM ANT. terminals. FM stereo signal OFF.	Connect V.T.V.M. to test point TP5.	Near max. capacity of VC. at position with no unrequired signal.	67KHz 9-20140 (Red)	Min.
2	38 KHz	Connect FM stereo SG to FM ANT terminals. 19KHz signal ON. Main channel, sub channel signal ON. Add 1000Hz signal from L Ch.	Connect V.T.V.M. to test point TP6.		38KHz 9-20210 (Black) 9-20220 (White)	Max.
3	FM stereo signal separation		Connect V.T.V.M. to R speaker terminal.		38KHz 9-20210 (Black)	Min.
4		Connect FM stereo SG to FM ANT terminals. 19KHz signal ON. Main channel, sub channel signal ON. Add 1000Hz signal from R Ch.	Connect V.T.V.M. to L speaker terminal.			Min.
5	Repeat steps 3 ~4. Set at position with max. channel separation.					

PREPARE

1. Variable capacitor completely closed.
2. Connect FM stereo SG. and V.T.V.M.
3. Function switch to "FM AUTO".
4. Use a screwdriver with plastic grip for all adjustments.

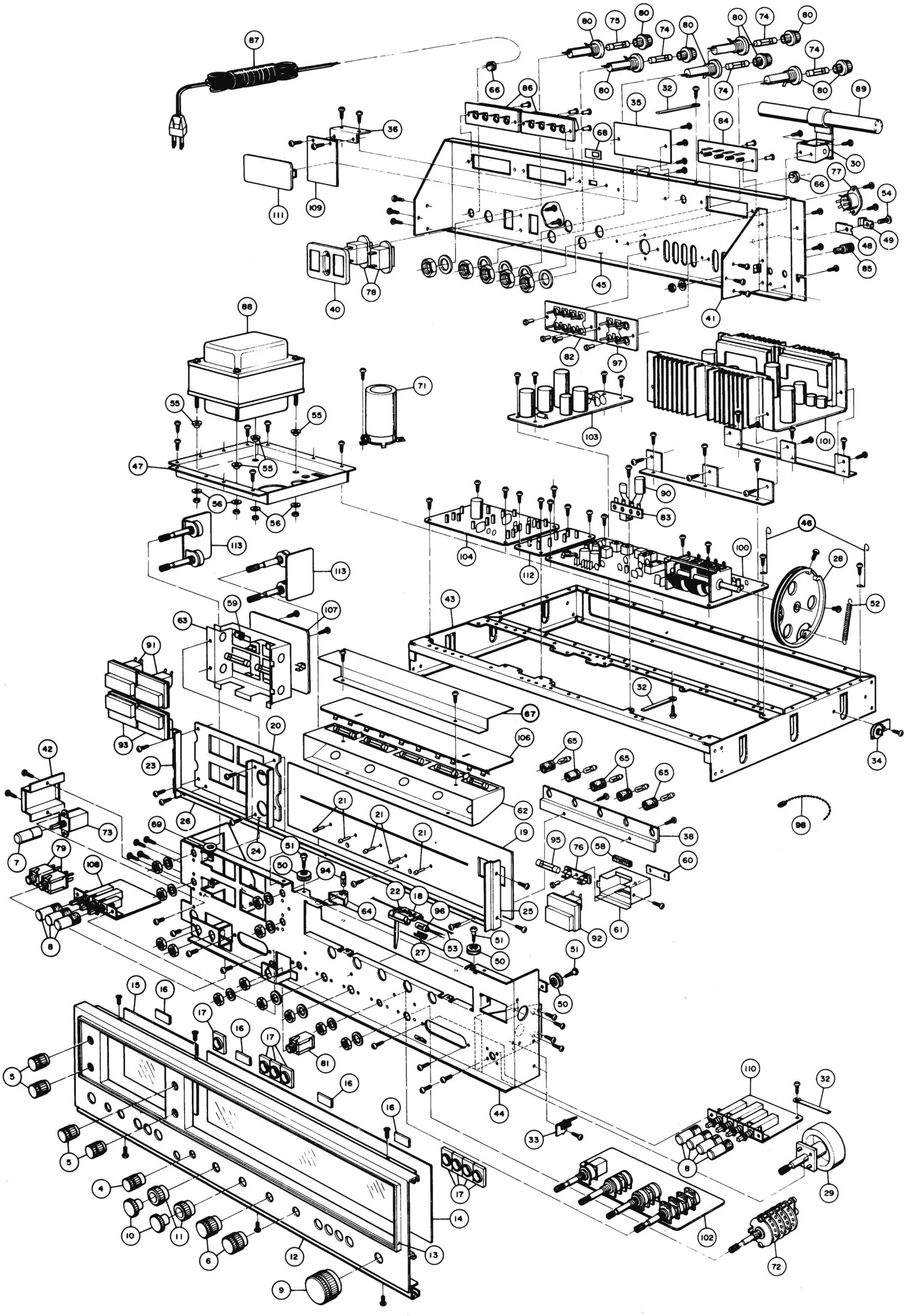

PARTS LIST

Key. No.	Part No.	Description	Q'ty
PACKING			
	4 2449 20230	Antenna, FM	1
	131 2 7103 18700	Label, Panel Rear	1
	131 6 1139 45003	Box, Corrugate Exp.	1
	131 6 2119 00570	Bag, Polyethylene	1
	131 6 2719 10600	Bag, Fan	1
	131 6 3009 17451	Pad	2
	131 6 4119 38100	Explanatory Booklet	1
	131 6 4519 11200	Guarantee Card	1
	131 6 4559 10100	Manufacturing NO	1
	131 6 4729 11401	Caution Label	1
	131 6 4739 11702	Standard Label, Panel Rear	1
CABINET			
1	131 0 1101 06400	Cabinet Assy	1
1-1	131 2 1101 27000	Cabinet	(1)
1-2	131 2 6201 12601	Plate Heat Sink	(1)
1-3	131 2 6101 16900	Plate Sheld	(1)
1-4	131 2 3101 12502	Metal Mount	(1)
2	131 2 1804 10601	Leg Rubber	4
3	131 2 4203 15200	Washer, Chassis	6
	131 2 4203 83202	Washer 3.2x10x1, Leg	4
	131 3 1104 02003	Screw, Pan Hd. 4x2, Chassis	6
	106 3 1103 11301	Screw, Round Hd. Wood 3.1x16, Leg	4
APPEARANCE			
4	131 0 1001 24100	Knob Assy, Mic. VR	1
5	131 0 1001 24200	Knob Assy, Level VR	4
6	131 0 1001 24300	Knob Assy, 2/4 Chl. Master VR	2
7	131 0 1001 25600	Knob Assy, Power Switch	1
8	131 0 1001 25700	Knob Assy, Function, Tape Loudness, SP Switch	7
9	131 0 1001 29200	Knob Assy, Tuning	1
10	131 0 1001 29300	Knob Assy, Bass, Treble	2
11	131 0 1001 29400	Knob Assy, Bass Treble	2
	131 0 1016 16503	Panel Decorate Assy	1
12	131 2 1203 26705	Panel, Control	(1)
13	131 2 1116 12400	Frame	(1)
14	131 2 1205 12101	Decorate Plate, Dial	(1)
15	131 2 1205 12200	Decorate Plate, Dial	(1)
16	131 2 4208 16300	Spaser	(4)
17	131 2 6111 12600	Bushing	(8)

EXPLODED VIEW (CABINET)

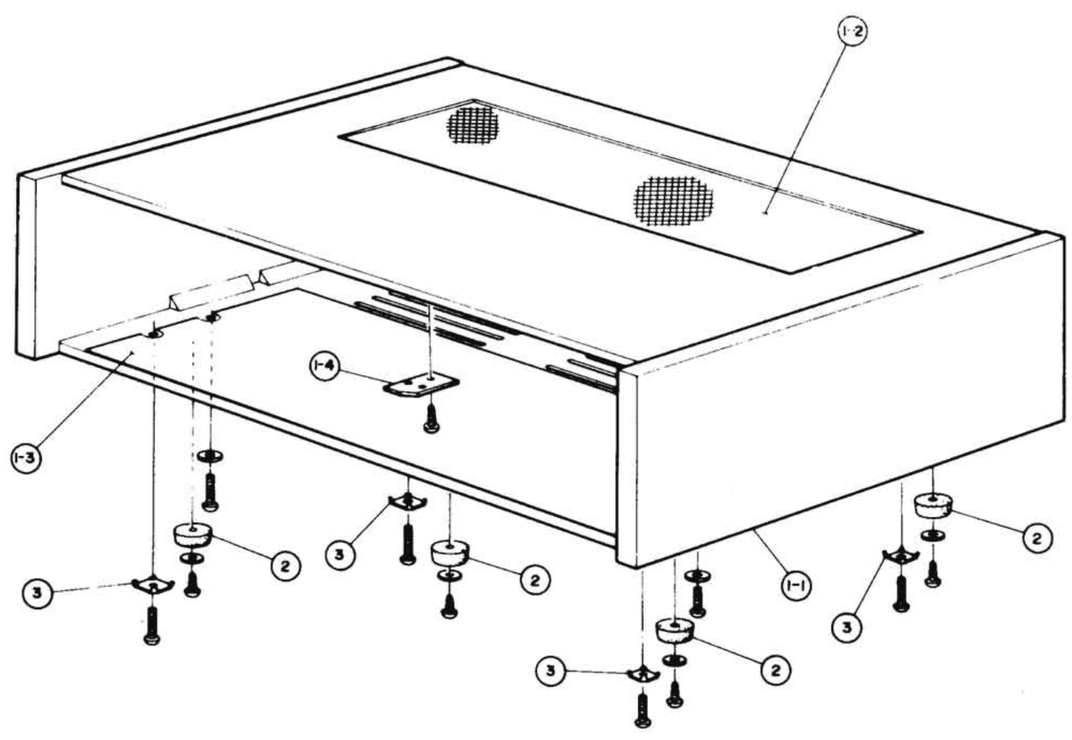

Key No.	Part No.	Description	Q'ty
APPEARANCE			
18	131 0 3011 13901	Pointer Assy	1
19	131 2 1201 23205	Plate, Dial	1
20	131 2 1314 10901	Plate, Decorate	1
21	131 2 1504 10900	Plate, Sign Lamp	5
22	131 2 5205 12000	Cushion, Pointer	1
23	131 2 6110 20500	Shelter Light, Decorate Left	1
24	131 2 6110 20600	Shelter Light, Dial Left	1
25	131 2 6110 20700	Shelter Light, Dial Right	1
26	131 2 6110 20800	Shelter Light, Dial Under	1
27	131 2 6308 12400	Filter, Pointer	1
	101 3 1203 00802	Screw, Flat Hd. 3x8	3
	102 3 1203 00802	Screw, Pan Hd. 3x8	12
CHASSIS			
28	131 0 3002 10201	Drum Assy	1
29	131 0 3003 16700	Shaft Dial Assy	1
30	131 0 3008 11702	Support Antenna Assy	1
32	131 0 3016 10400	Cramp Wire Assy	2
33	131 0 3020 01900	Pulley Assy	1
34	131 0 3020 03200	Pulley Assy, Right Side	1
35	131 2 1310 21802	Name Plate, Panel Rear	1
36	131 2 3101 16100	Metal Mount, DIN PCB	1
38	131 2 3101 20500	Metal Mount, 2/4 Chl. Ind.	1
40	131 2 3101 25300	Metal Mount, AC Out	1
41	131 2 3101 25400	Metal Mount, Panel Rear	1
42	131 2 3101 26500	Metal Mount, Power SW Side	1
43	131 2 3301 19200	Chassis	1
44	131 2 3305 16000	Panel, Front	1
45	131 2 3306 17801	Panel, Rear	1
46	131 2 3608 00200	Gramp Wire	2
47	131 2 3617 13200	Metal Mount, Trans	1
48	131 2 3621 00400	Metal, Cramp Wire, ANT	1
49	131 2 3621 00500	Metal, Cramp Wire, ANT	1
50	131 2 4107 10300	Pulley	3
51	131 2 4108 10300	Spindle, Pulley	3
52	131 2 4111 00200	Spring, Rope	1
53	131 2 4112 10200	Rope 0.5	1
54	131 2 4201 12701	Screw, ANT Lead	1
55	131 2 4203 15300	Washer, Trans	4
56	131 2 4203 15400	Washer, Trans	4
58	131 2 5206 11300	Mold Plane, Tuning Meter	1
59	131 2 2904 11700	Pand, lid	4
60	131 2 6107 13900	Plate, Sever	1
61	131 2 6110 17800	Shelter, Light, Tuning Meter	1
62	131 2 6110 20300	Shelter, Light, Dial	1
63	131 2 6110 20401	Shelter, Light, Level Meter	1
64	131 2 6111 11500	Bushing, Stereo Ind.	1
65	131 2 6111 11600	Bushing, 2/4 Chl. Ind.	5
66	131 2 6111 14200	Bushing, ANT Wire, AC Cord	2
67	131 2 6113 14800	Shelter, Dial Fiber	1
68	131 2 7104 00400	Plate Pad Switch	1
69	131 2 4208 20800	Spacer	3
	101 3 1103 00404	Screw, Pan Hd. 3x4	2
	101 3 1103 00603	Screw, Pan Hd. 3x6	2
	101 3 1103 00802	Screw, Pan Hd. 3x8	4
	102 3 1203 00602	Screw, Pan Hd. Tpg. 3x6	30
	102 3 1203 00802	Screw, Pan Hd. Tpg. 3x8	25
	102 3 1203 00805	Screw, Pan Hd. Tpg. 3x8	12
	102 3 1203 50800	Screw, Pan Hd. Tpg. 3.5x8	12
	104 3 1104 00013	Hex. Nut 4	4
	131 2 4203 84200	Washer 4.2x12x1, Trans	4
ELECTRICAL PARTS			
71	4 2239 20590	Electrolytic Capacitor 3300μF 50V	1
72	4 2319 21363	Switch, Rotary	1
73	4 2319 33620	Switch, Push, Power	1
74	4 2349 20030	Fuse, 2A Protector	4
75	4 2349 20190	Fuse, 2A AC Line	1
76	4 2359 20160	Fuse Holder	1
77	4 2359 20190	Socket, 5P DIN	1
78	4 2359 20941	Socket, AC	2

NOTES: 1. Part orders must contain Model Number, Part Number and Description.
2. Unless otherwise noted, component parts indicated by parentheses in the column Q'ty are not available.
3. Ordering quantity of screws and/or resistors must be multiple of 10 pcs.

PARTS LIST

Key No.	Part No.	Description	Q'ty
ELECTRICAL PARTS			
79	4 2359 21080	Jack, Headphone	2
80	4 2359 21110	Fuse Holder, AC Protector	5
81	4 2359 21410	MIC, Jack	1
82	4 2359 22000	Socket, Phono 8P	1
83	4 2379 20130	Terminal Lug, 1-3P	1
84	4 2379 21040	Terminal, 4P ANT. Input	1
85	4 2379 21060	Terminal	1
86	4 2379 21210	Terminal 4P, Speaker Out	2
87	4 2439 20600	Power Cord	1
88	4 2519 23210	Power Trans	1
89	4 2579 21082	Antenna Coil, MW	1
90	4 2659 20190	Multiplex Coil	1
91	4 5119 20291	Meter, VU	2
92	4 5119 20304	Meter, Tuning	1
93	4 5119 20410	Meter, VU	2
94	4 6129 20153	Pilot Lamp, Stereo Ind 6V,25mA	1
95	4 6129 20280	Pilot Lamp, Tuning Meter 6.3V	1
96	4 6129 20310	Pilot Lamp, Pointer 6.3V,140mA	1
97	4 2359 22020	Socket 6P AUX Phone	1
98	131 2 3608 11300	Cramp Wire	13
	201 3 7000 00300	Lug	2
		CAPACITORS	
C006	C1HFAM683A--	Mylar 0.068μF 50V ±20%	1
C004	C2JNRM103C--	PP 0.01μF 630V ±20%	1
C002,003 005	C1HYDZ403A--	Ceramic 0.04μF 50V +80%-20%	3
		RESISTORS	
R002,003	R2HCPK221A	Solid 220Ω ½W ±10%	2
R001,006	R2HCPK185A	Solid 1.8MΩ ½W ±10%	2
R005	R2EDPK331A	Carbon 330Ω ¼W ±10%	1
R004	R2EDPK102A	Carbon 1KΩ ¼W ±10%	1
RF, IF, MPX PCB ASSY			
100	131 0 4001 40301	RF IF MPX PCB Assy	1
	4 2229 23450	Potentiometer B-50K IC Bias	1
	4 2229 23580	VR 2K-B 19KHz Level Control	1
	4 2249 20480	Variable Capacitor	1
	4 2279 20160	Ceramic Filter, 10.7MHz	1
	4 2379 21120	Terminal, Test Point	7
L1	4 2539 20180	IF Trap	1
	4 2569 20850	Voice IF Trans	1
	4 2569 20860	Voice IF Trans	1
	4 2569 20970	IF Trans, AM-1st	1
	4 2569 20980	IF Trans, AM-Det.	1
	4 2569 21040	IF Trans, FM-1st	1
	4 2569 21050	IF Trans, FM-1st	1
	4 2569 21060	IF Trans, FM-3rd	1
	4 2569 21070	IF Trans, FM-3rd	1
	4 2569 21080	IF Trans, FM-2nd	1
	4 2569 21090	IF Trans, FM-2nd	1
	4 2579 21090	Antenna Coil, FM	1
	4 2589 20460	OSC Coil, FM	1
	4 2589 20690	OSC. Coil, MW	1
	4 2599 20330	RE Coil, FM	1
L2,3	4 2659 20190	Multiplex Coil	2
	4 2659 20210	Multiplex Coil 19KHz	1
	4 2659 20220	Multiplex Coil 38KHz	1
		SEMICONDUCTORS	
Q102	203 5 4510 66850	Transistors 2SC 668 (N) or (D)	1
Q105	203 5 5100 53640	Transistors 2SC 536 (D)	1
Q106	203 5 5510 92950	Transistors 2SC 929 (E)	1
Q104,108	203 5 5510 93040	Transistors 2SC 930 (N) or (D)	2
Q103,107	203 5 5510 93050	Transistors 2SC 930 (E)	2
Q101	203 5 6500 04160	Transistors 2SK 41 (F)	1
D101,102 103,104 105,106 107	202 5 9110 18820	Diode 1S188 (FM)	7
D108	205 5 9040 44210	Diode DS-442	1
IC101	206 5 0081 20122	IC LA 1201 B-H	1

Key No.	Part No.	Description	Q'ty
RF, IF, MPX PCB ASSY			
IC102	206 5 0673 30110	IC LA 3301	1
		CAPACITORS	
C111,155	C1HCSC010SL-	Ceramic 1pF 50V ±0.25pF	2
C121	C1HCSC020CH-	Ceramic 2pF 50V ±0.25pF	1
C108	C1HCSC030SL-	Ceramic 3pF 50V ±0.25pF	1
C107	C1HCSC040SL-	Ceramic 4pF 50V ±0.25pF	1
C150	C1HCSC050CH-	Ceramic 5pF 50V ±0.25pF	1
C123	C1HCSD050SL-	Ceramic 5pF 50V ±0.5pF	1
C113	C1HCSC070CH-	Ceramic 7pF 50V ±0.25pF	1
C116	C1HCSJ100CH-	Ceramic 10pF 50V ±5%	1
C186	C1HCSJ100SL-	Ceramic 10pF 50V ±5%	1
C115 146 148	C1HCSJ150CH-	Ceramic 15pF 50V ±5%	3
C124	C1HCSJ150WK-	Ceramic 15pF 50V ±5%	1
C101,105	C1HCSK150SL-	Ceramic 15pF 50V ±10%	2
C112	C1HCSJ200TH-	Ceramic 20pF 50V ±5%	1
C102,185	C1HCSK500SL-	Ceramic 50pF 50V ±10%	2
C109,161	C1HCSK101SL-	Ceramic 100pF 50V ±10%	2
C157,158	C1HCSK301SL-	Ceramic 300pF 50V ±10%	2
C122	C1HFRM102A--	Mylar 0.001μF 50V ±20%	1
C173,174	C1HFRM122A--	Mylar 0.0012μF 50V ±20%	2
C171,172	C1HFRM272A--	Mylar 0.0027μF 50V ±20%	2
C175,176	C1HFRM682A--	Mylar 0.0068μF 50V ±20%	2
C126,129 139,177 178	C1HFRM103A--	Mylar 0.01μF 50V ±20%	5
C125,127 130,131 132	C1HFRM473A--	Mylar 0.047μF 50V ±20%	5
C135,159 160,168	C1ARE-106A--	Electrolytic 10μF 10V	4
C140	C1ARE-336A--	Electrolytic 33μF 10V	1
C128	C1VSEJ341A--	Styrol 340pF 35V ±5%	1
C163	C1VSEK821A--	Styrol 820pF 35V ±10%	1
C167	C1VSEK152A--	Styrol 1500pF 35V ±10%	1
C166	C1VSEK252A--	Styrol 2500pF 35V ±10%	1
C165	C1VSEK103A--	Styrol 10000pF 35V ±10%	1
C144	C1AUEM104A--	Alsicon 0.1μF 10V ±20%	1
C142,162 169,170	C1AUFM105A--	Alsicon 1μF 10V ±20%	4
C103,104 106,110 114	C1EYSZ103A--	Ceramic 0.01μF 25V +80-20%	5
C118,119 120,117 134,136 137,138 151,145 147,149 152,153 154,156 184	C1EYSZ203A--	Ceramic 0.02μF 25V +80-20%	17
C141	C1HYSZ303A--	Ceramic 0.03μF 50V +80-20%	1
C133	C1EYSZ403A--	Ceramic 0.04μF 25V +80-20%	1
		RESISTORS	
R103	R2EDCK220A	Carbon 22Ω ¼W ±10%	1
R104	R2EDCK470A	Carbon 47Ω ¼W ±10%	1
R107,130	R2EDSK560A	Carbon 56Ω ¼W ±10%	2
R156	R2EDSK680A	Carbon 68Ω ¼W ±10%	1
R109,115 119,122 124,127 141,142 151,158	R2EDSK101A	Carbon 100Ω ¼W ±10%	10
R159	R2EDPK121A	Carbon 120Ω ¼W ±10%	1
R146	R2EDSK331A	Carbon 330Ω ¼W ±10%	1
R147	R2EDSK471A	Carbon 470Ω ¼W ±10%	1
R136,139 149	R2EDSK561A	Carbon 560Ω ¼W ±10%	3
R108	R2EDCK681A	Carbon 680Ω ¼W ±10%	1
R150	R2EDUK681A	Carbon 680Ω ¼W ±10%	1
R131,153	R2EDSK102A	Carbon 1KΩ ¼W ±10%	2
R152	R2EDSK122A	Carbon 1.2KΩ ¼W ±10%	1
R140	R2EDSK152A	Carbon 1.5KΩ ¼W ±10%	1
R118,120	R2EDSK182A	Carbon 1.8KΩ ¼W ±10%	2

NOTES: 1. Part orders must contain Model Number, Part Number and Description.
2. Unless otherwise noted, component parts indicated by parentheses in the column Q'ty are not available.
3. Ordering quantity of screws and/or resistors must be multiple of 10 pcs.

RF.IF.MPX. P.C.B. BOTTOM VIEW

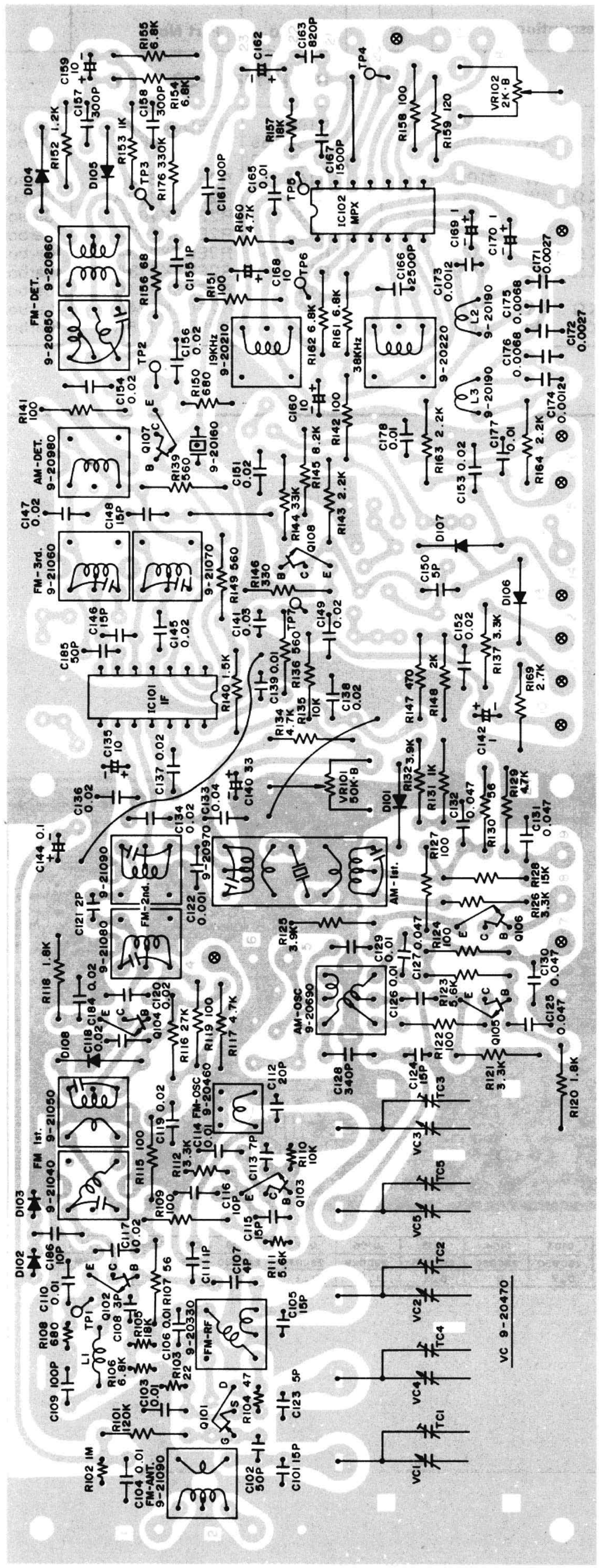

CLASSIFICATION	IC101	Q101	Q102	Q103	Q104	Q105	Q106	Q107	Q108	D101 , D108	D102~D107
	LA1201	2SK41	2SC668	2SC930	2SC930	2SC536	2SC929	2SC930	2SC930	DS-442	1S188 FMI
RANK	B-H	F	D , E	D , E	D	D , E	D , E	D , E	D		

Key No.	Part No.	Description			Q'ty
RF, IF, MPX PCB ASSY					
R148	R2EDSK202A	Carbon 2KΩ	¼W	±10%	1
R143,163 164	R2EDSK222A	Carbon 2.2KΩ	¼W	±10%	3
R169	R2EDSK272A	Carbon 2.7KΩ	¼W	±10%	1
R112	R2EDCK332A	Carbon 3.3KΩ	¼W	±10%	1
R121,126 137	R2EDSK332A	Carbon 3.3KΩ	¼W	±10%	3
R125,132	R2EDSK392A	Carbon 3.9KΩ	¼W	±10%	2
R117,129 134,160	R2EDSK472A	Carbon 4.7KΩ	¼W	±10%	4
R111	R2EDCK562A	Carbon 5.6KΩ	¼W	±10%	1
R123	R2EDSK562A	Carbon 5.6KΩ	¼W	±10%	1

Key No.	Part No.	Description			Q'ty
RF, IF MPX PCB ASSY					
R106	R2EDCK682A	Carbon 6.8KΩ	¼W	±10%	1
R154,155 161,162	R2EDSK682A	Carbon 6.8KΩ	¼W	±10%	4
R145	R2EDSK822A	Carbon 8.2KΩ	¼W	±10%	1
R110	R2EDCK103A	Carbon 10KΩ	¼W	±10%	1
R135	R2EDSK103A	Carbon 10KΩ	¼W	±10%	1
R128	R2EDSK153A	Carbon 15KΩ	¼W	±10%	1
R105,157	R2EDCK183A	Carbon 18KΩ	¼W	±10%	2
R116	R2EDSK273A	Carbon 27KΩ	¼W	±10%	1
R144	R2EDSK333A	Carbon 33KΩ	¼W	±10%	1
R101	R2EDSK124A	Carbon 120KΩ	¼W	±10%	1
R102	R2EDCK105A	Carbon 1MΩ	¼W	±10%	1

RF.IF.MPX. P.C.B. TOP VIEW

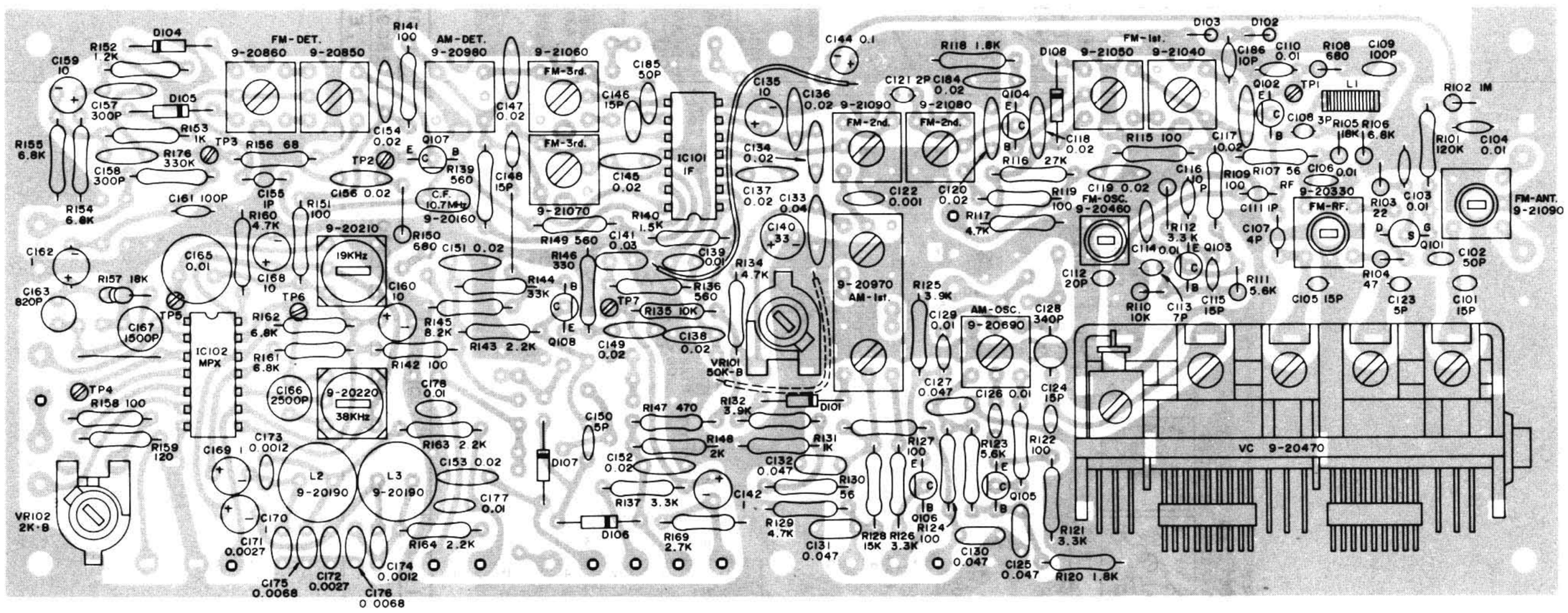

CLASSIFICATION	IC101	IC102	Q101	Q102	Q103	Q104	Q105	Q106	Q107	Q108	D101, D108	D102~D107	
	LA1201	LA3301	2SK41	2SC668	2SC930	2SC930	2SC536	2SC929	2SC930	2SC930	DS-442	1S188 FM1	
RANK	B-H		F	D, E	D, E	D	D, E	D, E	D, E	D			

Key No.	Part No.	Description	Q'ty
PRE-2 PCB ASSY			
112	131 0 4001 48101	Pre 2 PCB Assy	1
		CAPACITORS	
C305,306 307,308	C1HCSK200SL-	Ceramic 20pF 50V ±10%	4
C301,302 303,304 309,310 311,312	C1EUBM105A--	Alsicon 1μF 25V ±20%	8
		RESISTORS	
R329,330 331,332	R2EDCK102A	Carbon 1KΩ ¼W ±10%	4
R309,310 311,312	R2EDCK332A	Carbon 3.3KΩ ¼W ±10%	4
R321,322 323,324	R2EDCK682A	Carbon 6.8KΩ ¼W ±10%	4
R305,306 307,308	R2EDCK154A	Carbon 150KΩ ¼W ±10%	4
R317,318 319,320 313,314 315,316	R2EDCK334A	Carbon 330KΩ ¼W ±10%	8
R301,302 303,304	R2EDCK564A	Carbon 560KΩ ¼W ±10%	4
		SEMICONDUCTORS	
Q301,302 303,304	203 5 5100 69369	Transistors 2SC 693 FL (W)	4

Key No.	Part No.	Description	Q'ty
DIMENSION PCB ASSY			
113	131 0 4001 58200	Dimension PCB Assy	2
	4 2229 23650	VR C-100K Dimension	2
		CAPACITORS	
C401,402 403,404	C1EUBM105A--	Alsicon 1μF 25V ±20%	4
		RESISTORS	
R401,402 405,406	R2EDSK102A	Carbon 1KΩ ¼W ±10%	4
R403,404	R2EDSK153A	Carbon 15KΩ ¼W ±10%	2
		SEMICONDUCTORS	
D401,402	202 5 9110 18820	Diode 1S 188FM1-A	2
D403,404	205 5 9020 43011	Diode DS 430	2

PRE-2 P.C.B. BOTTOM VIEW

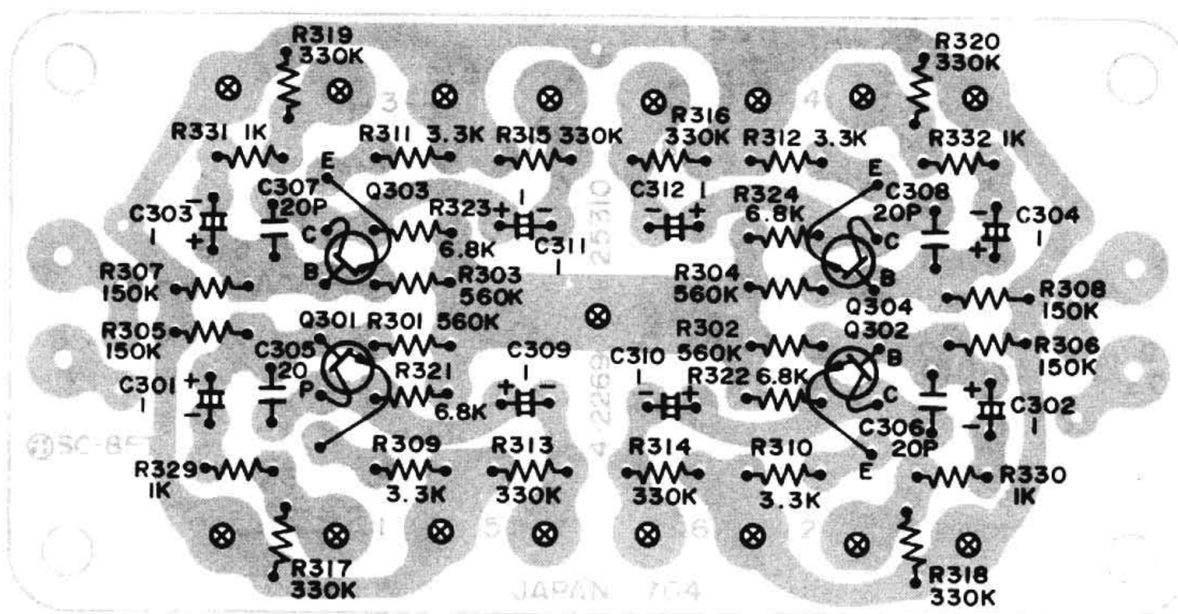

Q301 ~ Q304 2SC693 FL or GL

DIMENSION P.C.B. BOTTOM VIEW

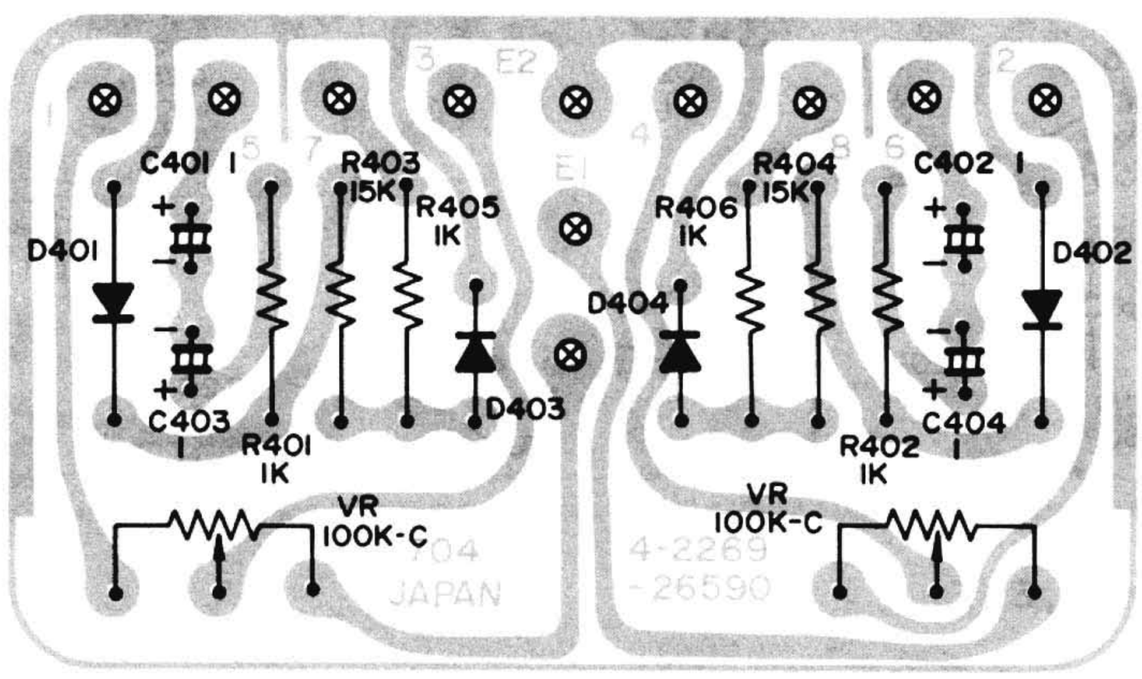

D401 , D402 1S188 D403 , D404 DS-430

Key No.	Part No.	Description	Q'ty
SQ PCB ASSY			
104	131 0 4001 43600	SQ PCB ASSY	1
		CAPACITORS	
C17,19	C1HCSK800SL-	Ceramic 80pF 50V ±10%	2
C36,37	C1HCSK101SL-	Ceramic 100pF 50V ±10%	2
C13,15	C1HCSK151SL-	Ceramic 150pF 50V ±10%	2
C14,16	C1HFAM102A--	Mylar 0.001μF 50V ±20%	2
C05,07	C1HFAM402A--	Mylar 0.004μF 50V ±20%	2
C06,08	C1HFAM153A--	Mylar 0.015μF 50V ±20%	2
C09,11	C1HFAM303A--	Mylar 0.03μF 50V ±20%	2
C10,12	C1HFAM154A--	Mylar 0.15μF 50V ±20%	2
C21,22 23,24 29,30	C1ERB-105A--	Electrolytic 1μF 25V	6
C33,34	C1ARB-336A--	Electrolytic 33μF 10V	2
C35	C1VRB-337A	Electrolytic 330μF 35V	1

Key No.	Part No.	Description	Q'ty
SQ PCB ASSY			
C01,02 03,04 25,26 27,28 31,32	C1EUBM105A--	Alsicon 1μF 25V ±20%	10
C18,20	C1HYSK821A--	Ceramic 820pF 50V ±10%	2
		RESISTORS	
R56,57	R2EDSK682A	Carbon 6.8KΩ ¼W ±10%	2
R60	R2EDSK223A	Carbon 22KΩ ¼W ±10%	1
		SEMICONDUCTORS	
Q01,02 03,04 05,06 07,08 09,10 11,12	203 5 5100 53744	Transistor 2SC 537(D) WHT	12

NOTES: 1. Part orders must contain Model Number, Part Number and Description.
2. Unless otherwise noted, component parts indicated by parentheses in the column Q'ty are not available.
3. Ordering quantity of screws and/or resistors must be multiple of 10 pcs.

SQ. P.C.B. BOTTOM VIEW

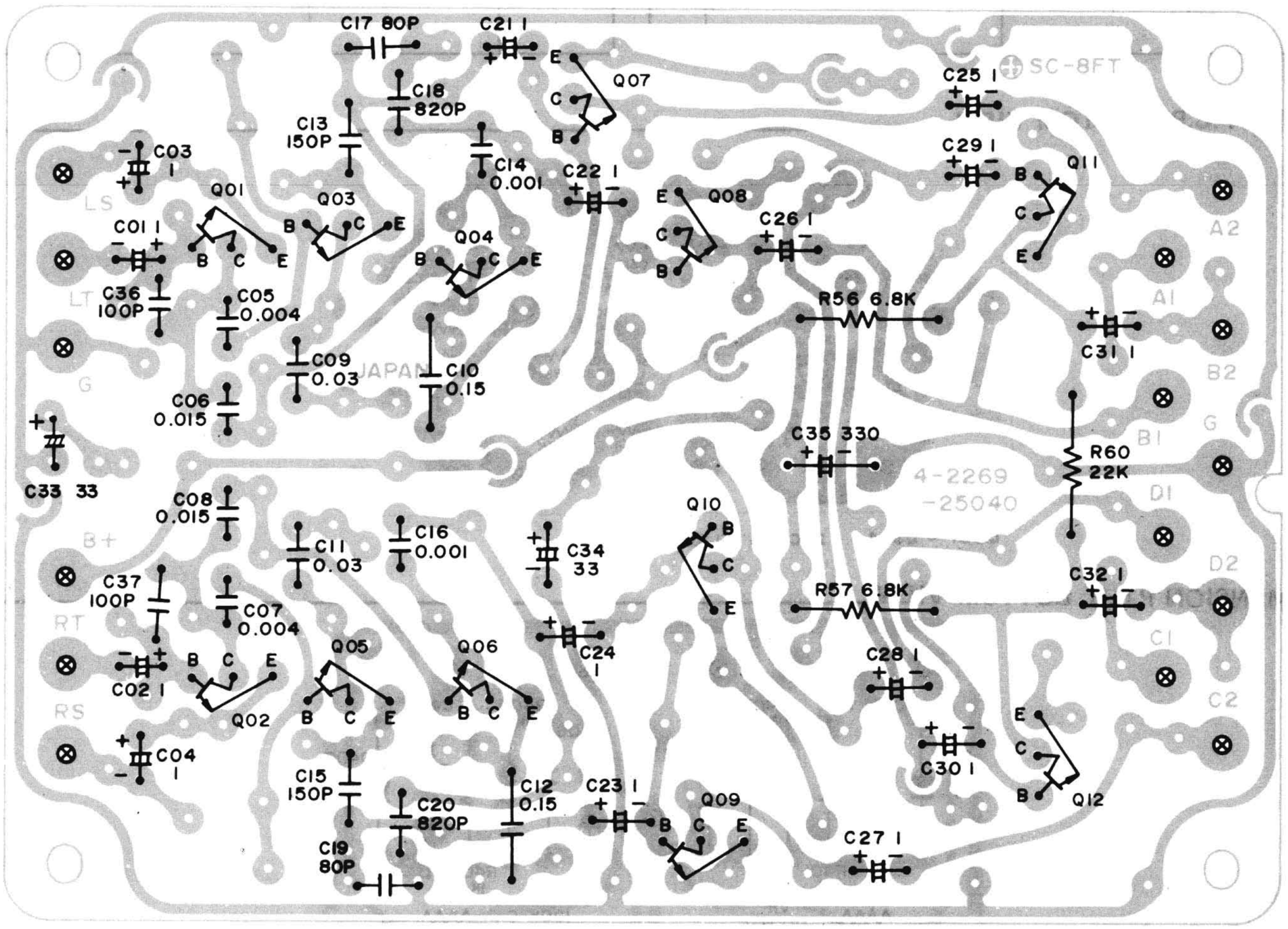

Q01 ~ Q12 2SC537 (W) D, E, F

SQ P.C.B. ASSY PRINTED RESISTORS

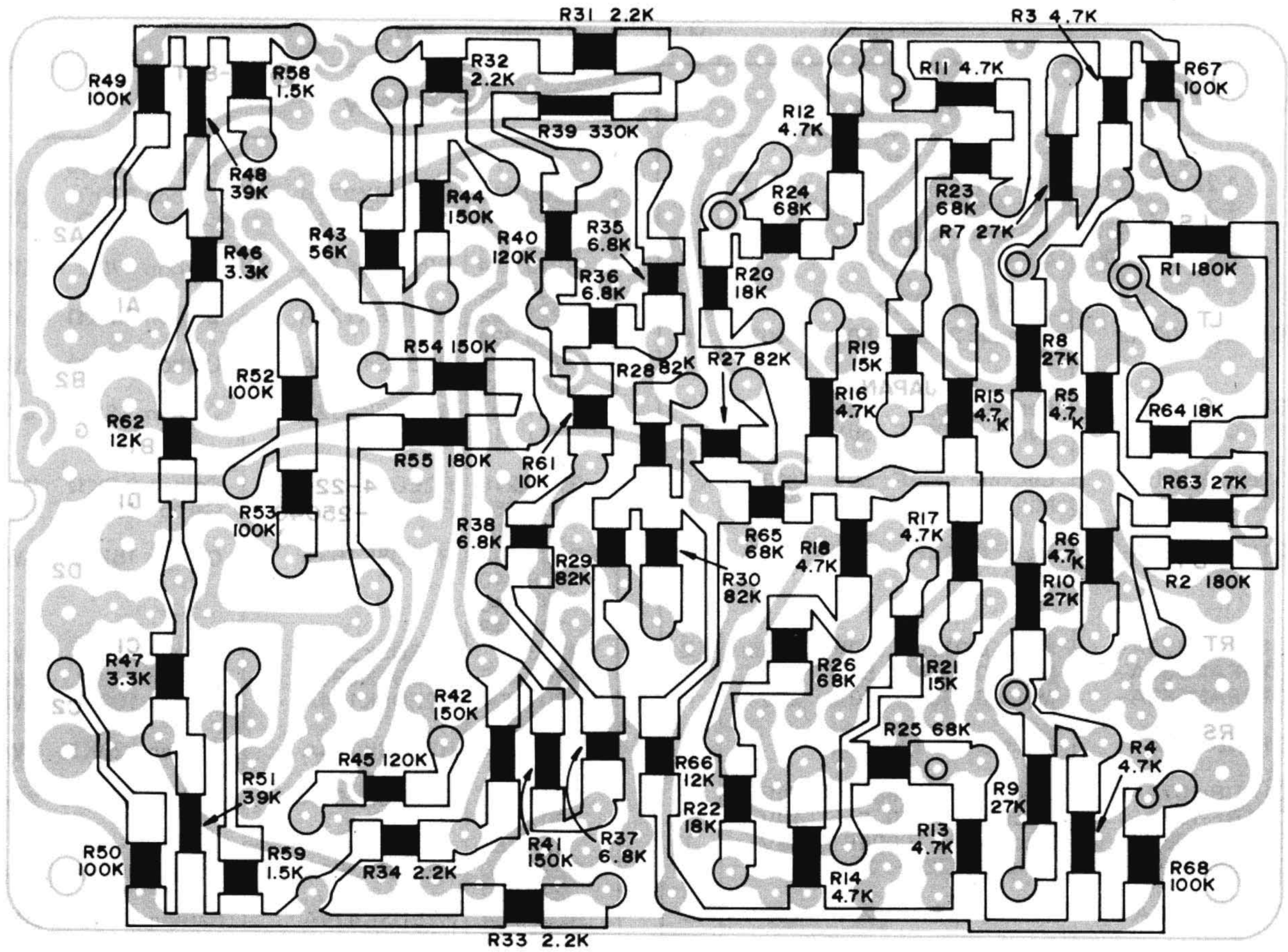

SQ. P.C.B. TOP VIEW

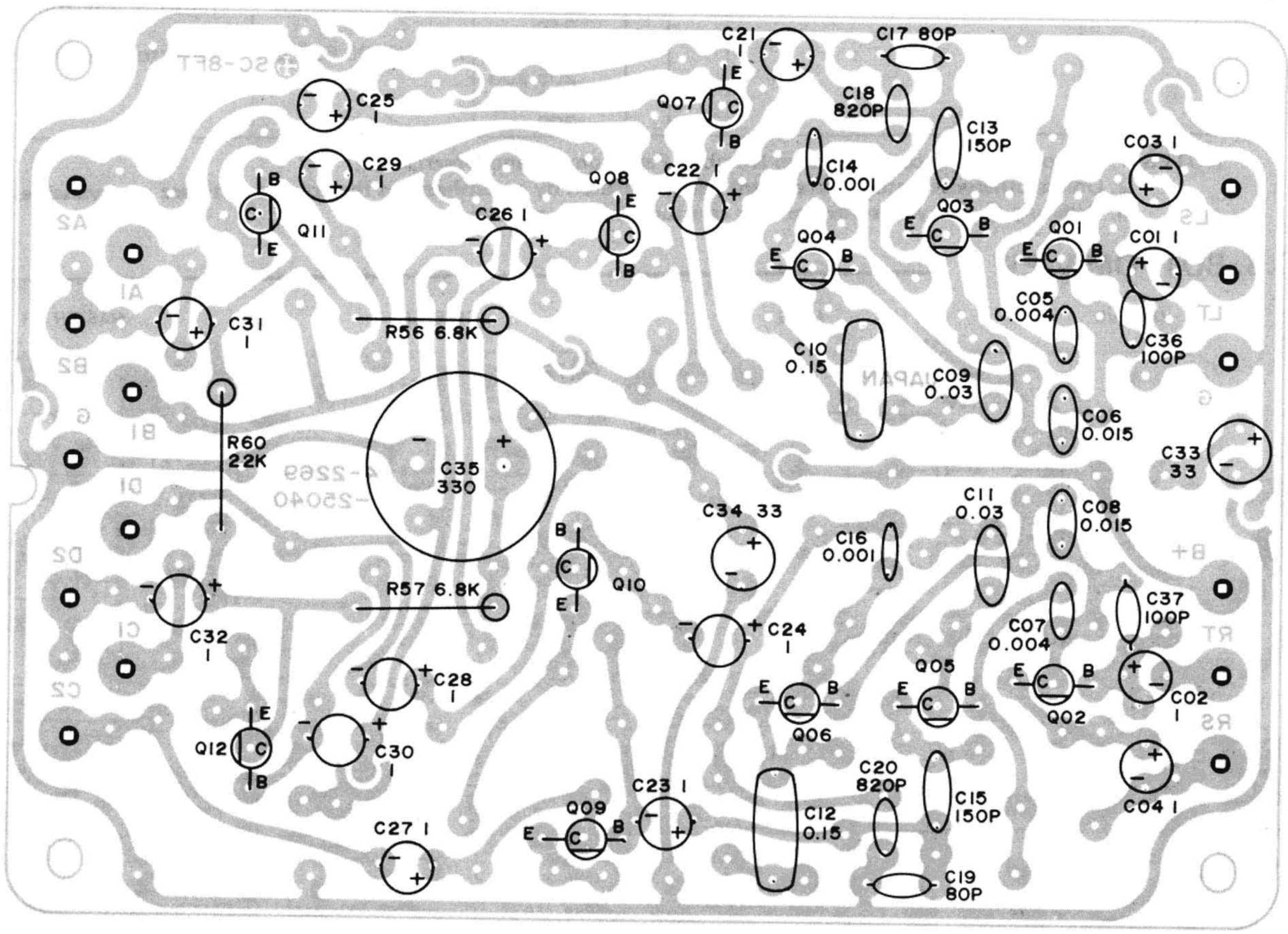

Q01 ~ Q12 2SC537 (W) D,E,F

Key No.	Part No.	Description	Q'ty
PRE EQ PCB ASSY			
102	131 0 4001 40801	Pre EQ PCB Assy	1
	4 2229 23531	VR R-1K Mic VR	1
	4 2229 23630	VR A-50K Bass, Treble	2
	4 2229 23640	VR B-200K Master VR	1
	131 2 4208 17800	Spacer, Master VR	4
		CAPACITORS	
C205,206 219,220 221,222	C1HCSK200SL-	Ceramic 20pF 50V ±10%	6
C252	C1HCSK500SL-	Ceramic 50pF 50V ±10%	1
C203,204 237,238	C1HCSK101SL-	Ceramic 100pF 50V ±10%	4
C235,236	C1HCSK301SL-	Ceramic 300pF 50V ±10%	2
C231,232 233,234	C1HFAM152A--	Mylar 0.0015μF 50V ±20%	4
C239,240 241,242 243,244 245,246	C1HFAM103A--	Mylar 0.01μF 50V ±20%	8
C207,208	C1HFAM123A--	Mylar 0.012μF 50V ±20%	2
C211,212	C1HFAM333A--	Mylar 0.033μF 50V ±20%	2
C247,248 249,250	C1HFAM683A--	Mylar 0.068μF 50V ±20%	4
C223,224 225,226	C1FRB-105A--	Electrolytic 1μF 25V	4
C213,214	C1ARB-107A--	Electrolytic 100μF 10V	2
C255	C1ARF-107A--	Electrolytic 100μF 10V	1
C254	C1VRB-108A--	Electrolytic 1000μF 35V	1
C209,210 251	C1EUBM224A--	Alsicon 0.22μF 25V ±20%	3
C215,216 217,218 227,228 229,230 253	C1EUBM105A--	Alsicon 1μF 25V ±20%	9
C201,202	C1EUBM335A--	Alsicon 3.3μF 25V ±20%	2

Key No.	Part No.	Description	Q'ty
PRE EQ PCB ASSY			
		RESISTORS	
R209,210	R2EDSK271A	Carbon 270Ω ¼W ±10%	2
R241,242 243,244	R2EDSK391A	Carbon 390Ω ¼W ±10%	4
R213,214 259,260	R2EDSK471A	Carbon 470Ω ¼W ±10%	4
R221,222 223,224	R2EDSK122A	Carbon 1.2KΩ ¼W ±10%	4
R249,250 251,252	R2EDSK272A	Carbon 2.7KΩ ¼W ±10%	4
R201,202 211,212 262	R2EDSK332A	Carbon 3.3KΩ ¼W ±10%	5
R215,216	R2EDSK822A	Carbon 8.2KΩ ¼W ±10%	2
R253,254 255,256	R2EDSK123A	Carbon 12K Ω ¼W ±10%	4
R237,238 239,240 245,246 247,248	R2EDSK153A	Carbon 15KΩ ¼W ±10%	8
R263	R2EDSK223A	Carbon 22KΩ ¼W ±10%	1
R265,266	R2EDPK393A	Carbon 39KΩ ¼W ±10%	2
R203,204 219,220	R2EDSK104A	Carbon 100KΩ ¼W ±10%	4
R261,217 218	R2EDSK124A	Carbon 120KΩ ¼W ±10%	3
R205,206 207,208 257,258	R2EDSK154A	Carbon 150KΩ ¼W ±10%	6
R229,230 231,232	R2EDSK394A	Carbon 390KΩ ¼W ±10%	4
R233,234 235,236	R2EDSK474A	Carbon 470KΩ ¼W ±10%	4
R225,226 227,228	R2EDSK684A	Carbon 680KΩ ¼W ±10%	4
R264	R2HXPK561A	Oxside Metal 560Ω ½W±10%	1
		SEMICONDUCTORS	
Q203,204 210	203 5 5100 69532	Transistor 2SC 693	3
Q201,202 205,206 207,208 209	203 5 5100 69369	Transistor 2SC 693	7

NOTES: 1. Part orders must contain Model Number, Part Number and Description.
2. Unless otherwise noted, component parts indicated by parentheses in the column Q'ty are not available.
3. Ordering quantity of screws and/or resistors must be multiple of 10 pcs.

PRE EQ P.C.B. BOTTOM VIEW

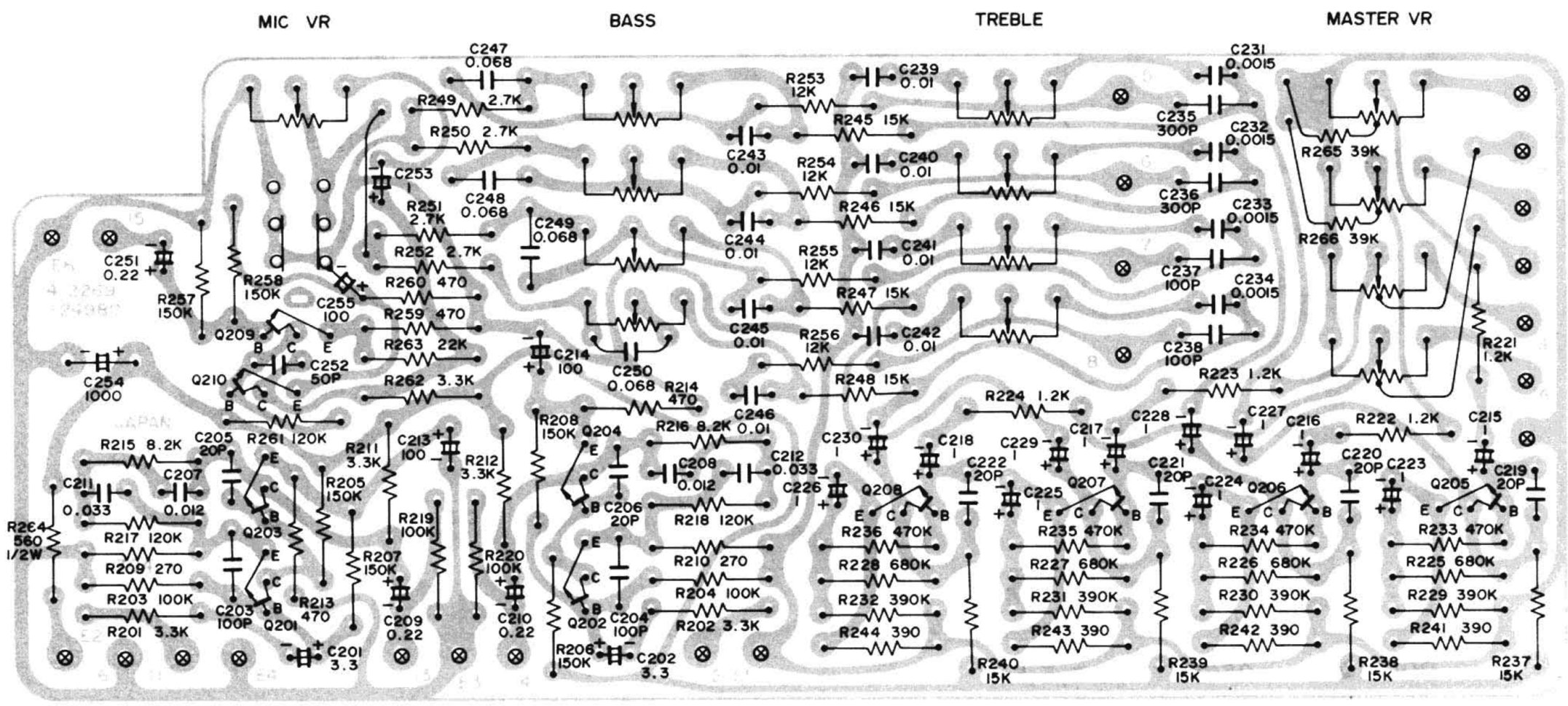

Q201 ~ Q209 2SC693 FL or GL Q210 2SC693 Eu or Gu

MAIN AMP P.C.B. TOP VIEW

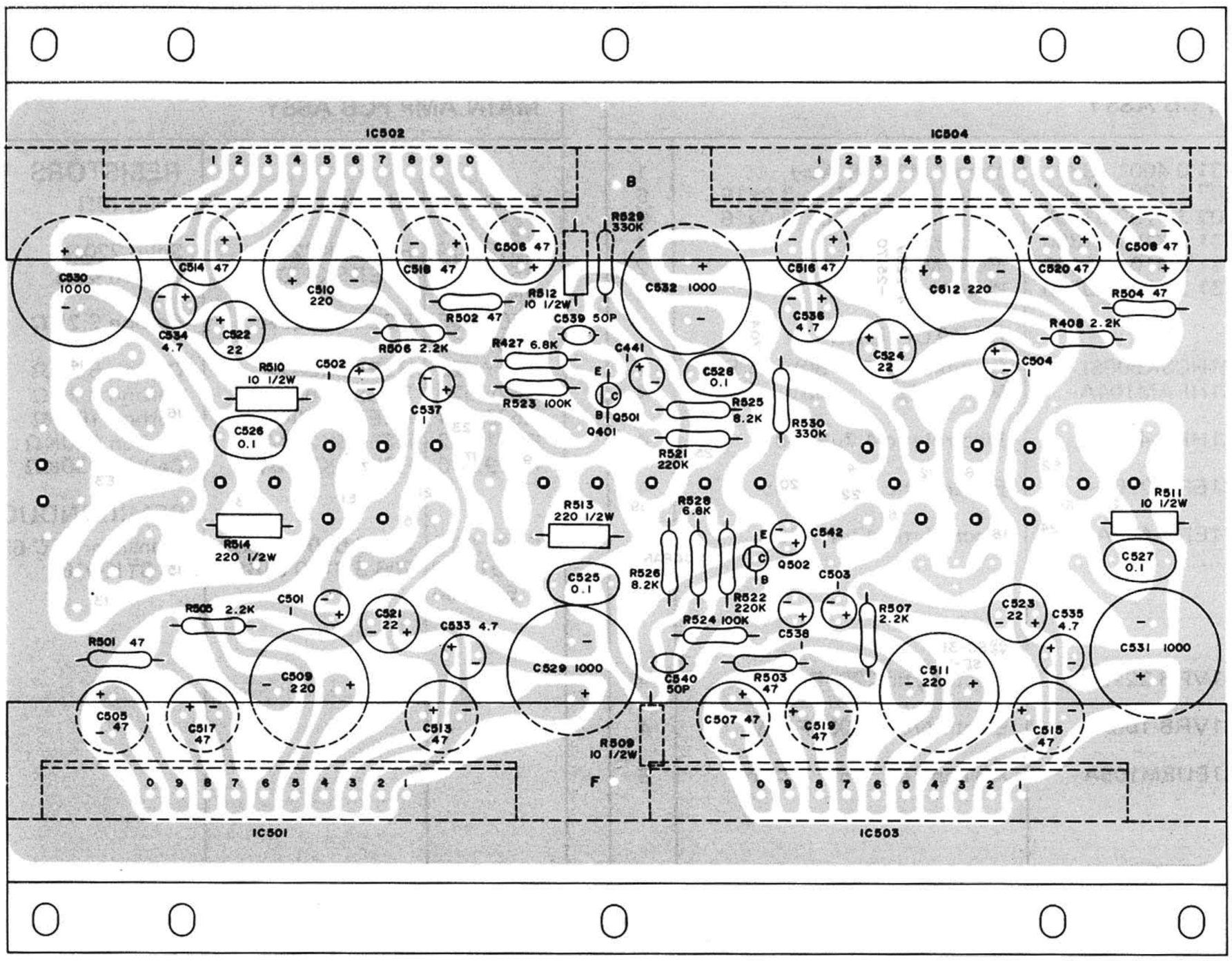

Q501 , Q502 2SC693FU · IC501 ~ IC505 STK016

PRE EQ P.C.B. TOP VIEW

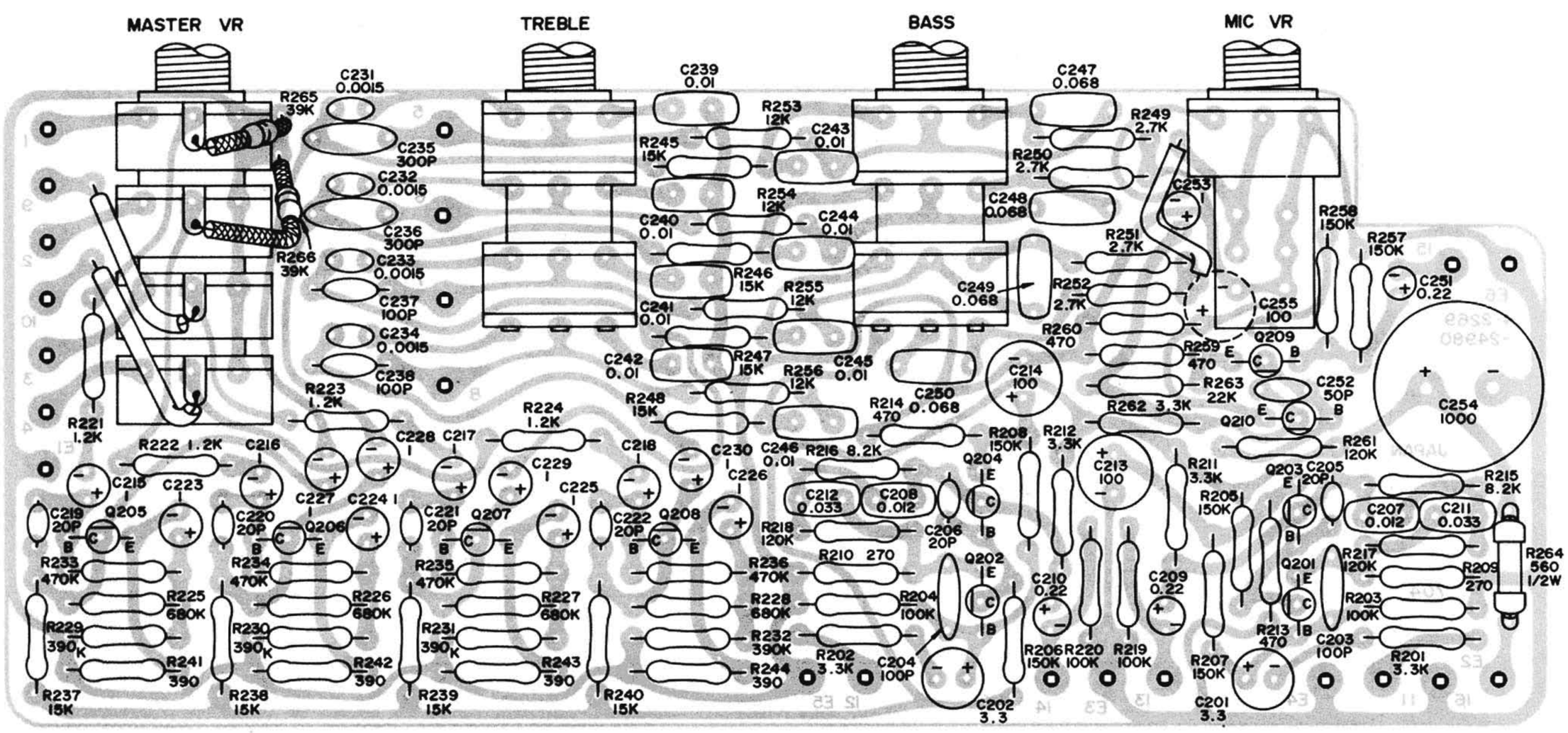

Q201 ~Q209 2SC693 FL or GL · Q210 2SC693 Eu or Fu

Key No.	Part No.	Description	Q'ty
MAIN AMP PCB ASSY			
101	131 0 4001 43701	Main AMP PCB Assy	1
	102 3 1203 01802	Screw Pan Hd. Tpg. 3.0x16	6
	102 3 1203 01602	Screw Pan Hd. Tpg. 3.0x16	8
	131 2 3101 21300	Metal Mount	4
	131 2 3101 26400	Metal Mount	2
	131 2 6201 20300	Plate Heat Sink	2
		CAPACITORS	
C539,540	C1HCSK500SL-	Ceramic 50pF 50V ±10%	2
C525,526 527,528	C1HFAM104A--	Mylar 0.1μF 50V ±20%	4
C533,534 535,536	C1HRB-475A--	Electrolytic 4.7μF 50V	4
C521,522 523,524	C1ERB-226A--	Electrolytic 22μF 25V	4
C505,506 507,508 513,514 515,516 517,518 519,520	C1ERB-476A--	Electrolytic 47μF 25V	12
C509,510 511,512	C1VRB-227A--	Electrolytic 220μF 35V	4
C529,530 531,532	C1VRB-108A--	Electrolytic 1000μF 35V	4
C501,502 503,504 537,538 541,542	C1EUBM105A--	Alsicon 1μF 25V ±20%	6

Key No.	Part No.	Description	Q'ty
MAIN AMP PCB ASSY			
		RESISTORS	
R509,510 511,512	R2HCSK100A	Solid 10Ω ½W ±10%	4
R513,514	R2HCSK221A	Solid 220Ω ½W ±10%	2
R501,502 503,504	R2EDSK470A	Carbon 47Ω ¼W ±10%	4
R505,506 507,508	R2EDSK222A	Carbon 2.2KΩ ¼W ±10%	4
R527,528	R2EDSK682A	Carbon 6.8KΩ ¼W ±10%	2
R525,526	R2EDSK822A	Carbon 8.2KΩ ¼W ±10%	2
R523,524	R2EDSK104A	Carbon 100KΩ ¼W ±10%	2
R521,522	R2EDSK224A	Carbon 220KΩ ¼W ±10%	2
R529,530	R2EDSK334A	Carbon 330KΩ ¼W ±10%	2
		SEMICONDUCTORS	
Q501,502	203 5 5100 69362	Transistor 2SC 693 FU	2
IC501,502 503,504	206 5 6160 01610	IC STK-016	4

NOTES: 1. Part orders must contain Model Number, Part Number and Description.
2. Unless otherwise noted, component parts indicated by parentheses in the column Q'ty are not available.
3. Ordering quantity of screws and/or resistors must be multiple of 10 pcs.

MAIN AMP P.C.B. BOTTOM VIEW

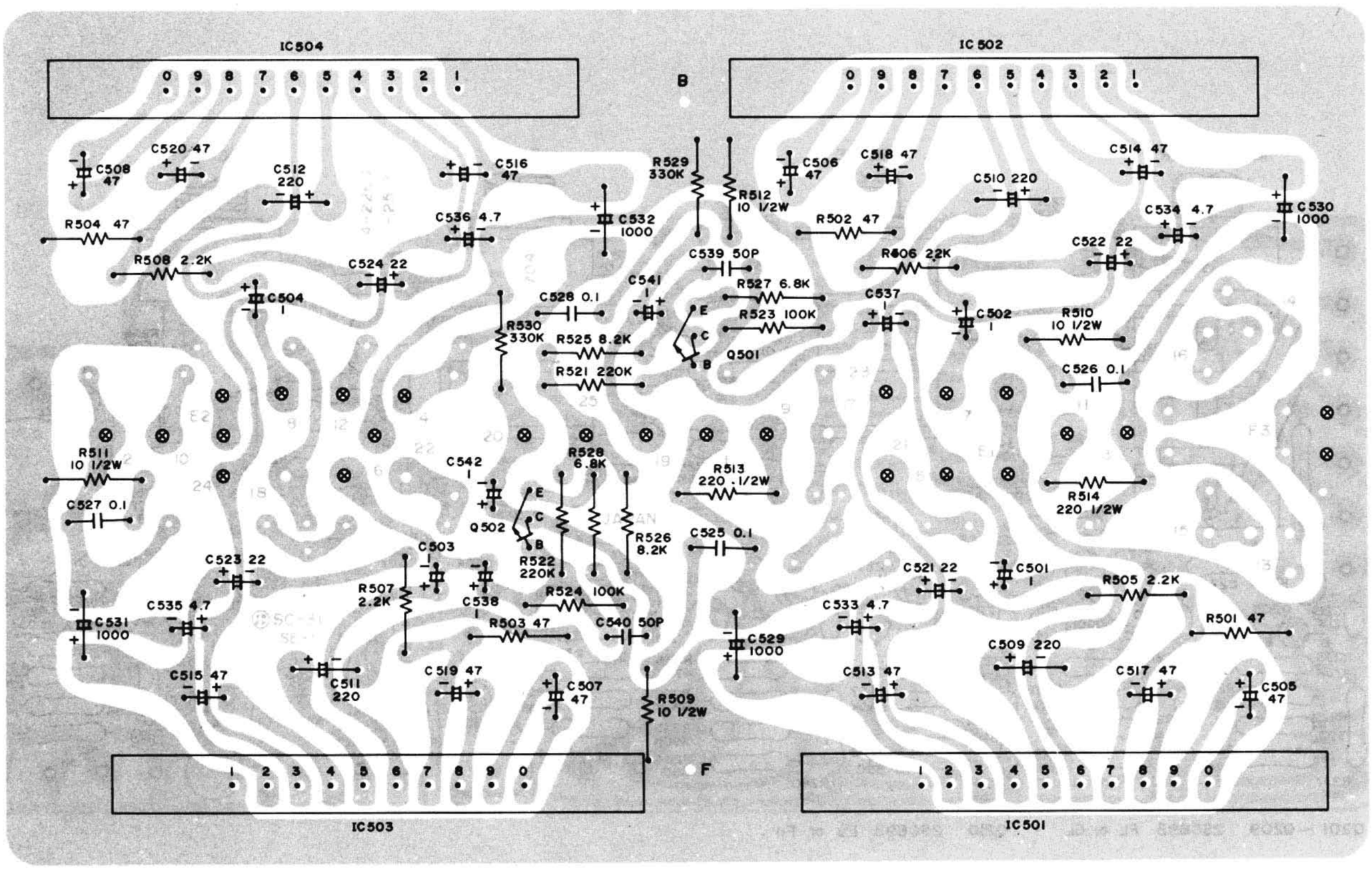

Q501 , Q502 2SC693 FU · IC501 ~ IC504 STK016

Key No.	Part No.	Description	Q'ty
POWER SUPPLY PCB ASSY			
103	131 0 4001 55803	Power Supply PCB Assy	1
	131 2 6108 11201	Cover Sever, Diode	8
		CAPACITORS	
C606	C1ARB-477A--	Electrolytic 470μF 10V	1
C605,608	C1ERB-477A--	Electrolytic 470μF 25V	2
C607	C1HRB-477A--	Electrolytic 470μF 50V	1
C601,602 603,604	C2EYSZ103A--	Ceramic 0.01μF 250V +80-20%	4
		RESISTORS	
R606	R3AXPK221A	Oxside Metal 220Ω 1W ±10%	1
R604	R3AXPK271A	Oxside Metal 270Ω 1W ±10%	1
R602	R3AXPK331A	Oxside Metal 330Ω 1W ±10%	1
R603	R3DXPK471A	Oxside Metal 470Ω 2W ±10%	1
R607	R3AXPK821A	Oxside Metal 820Ω 1W ±10%	1
R601	R3WXPK821A	Oxside Metal 820Ω 3W ±10%	1
		SEMICONDUCTORS	
D605	202 5 3000 00910	Diode SZ-9	1
D601,602 603,604	DGG-G2B	Diode G2B	4

Key No.	Part No.	Description	Q'ty
DIN PCB ASSY			
109	131 0 4001 42606	DIN PCB Assy	1
		RESISTORS	
R803,804	R2EDSK153A	Carbon 15KΩ ¼W ±10%	2
R805,806	R2EDSK183A	Carbon 18KΩ ¼W ±10%	2
R801,802	R2EDSK683A	Carbon 68KΩ ¼W ±10%	2
R807,808	R2EDSK104A	Carbon 100KΩ ¼W ±10%	2
R809,810	R2EDSK184A	Carbon 180KΩ ¼W ±10%	2

NOTES: 1. Part orders must contain Model Number, Part Number and Description.
2. Unless otherwise noted, component parts indicated by parentheses in the column Q'ty are not available.
3. Ordering quantity of screws and/or resistors must be multiple of 10 pcs.

POWER SUPPLY P.C.B. BOTTOM VIEW

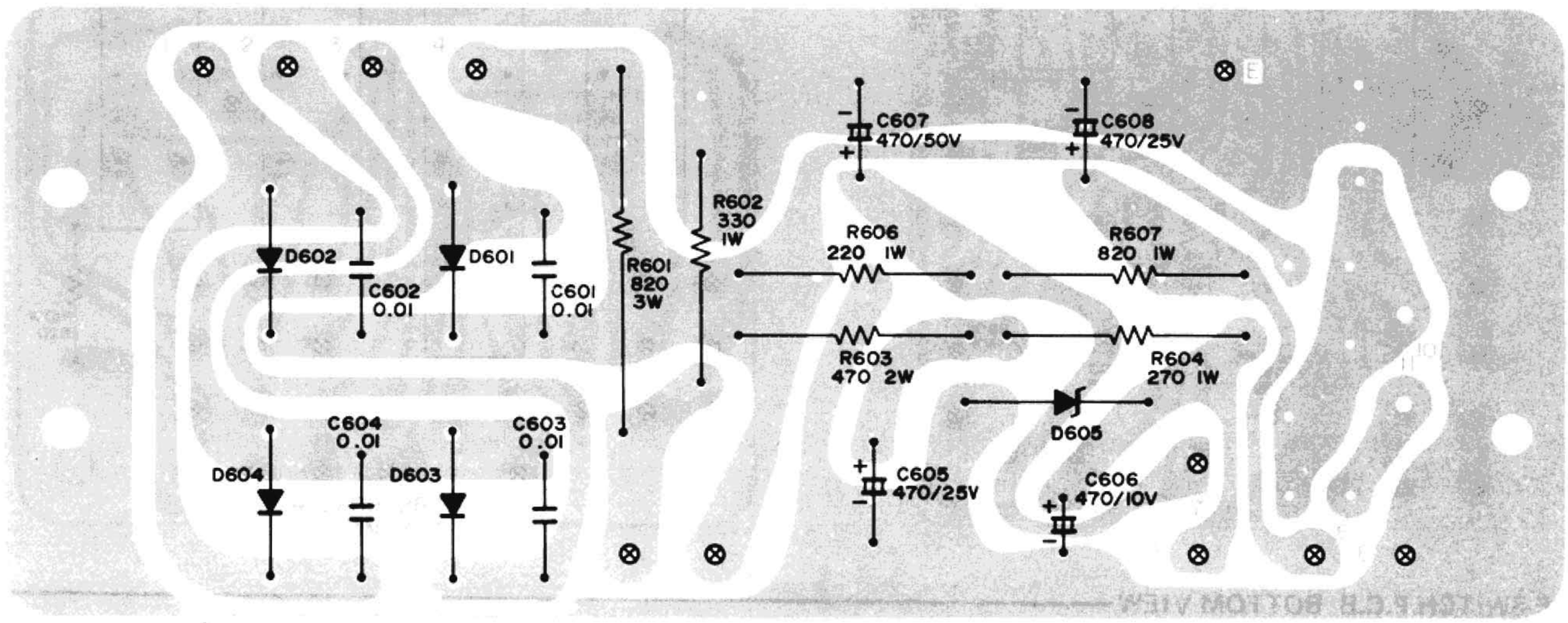

D601 ~ D604 G2-B · D605 SZ-9

DIN P.C.B. BOTTOM VIEW

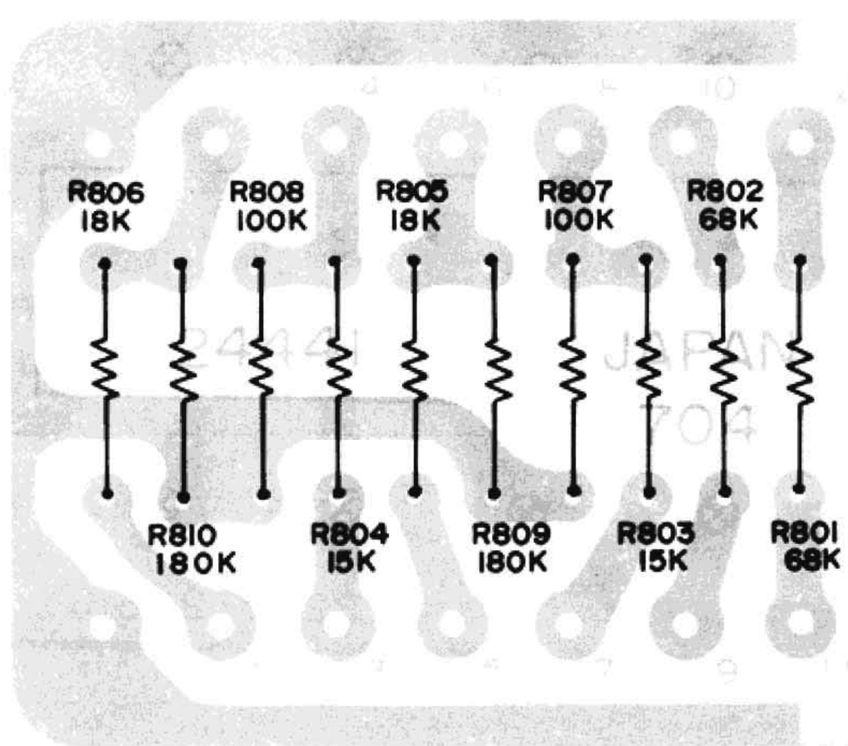

Key No.	Part No.	Description	Q'ty
PUSH SWITCH PCB ASSY			
108	131 0 4001 58600	Switch PCB Assy	1
	4 2319 23210	Switch, Push (3 key)	1
		CAPACITOR	
C901,902	C1HFAM103A--	Mylar 0.01μF 50V ±20%	2
C903,904	C1HYSK501R--	Ceramic 500pF 50V ±10%	2
		RESISTORS	
R905,906	R2EDUK153A	Carbon 15KΩ ¼W ±10%	2
R907,908	R2EDUK183A	Carbon 18KΩ ¼W ±10%	2
R901,902	R2EDUK273A	Carbon 27KΩ ¼W ±10%	2
R909,910	R2EDUK104A	Carbon 100KΩ ¼W ±10%	2
R911,912	R2EDUK184A	Carbon 180KΩ ¼W ±10%	2
R903,904	R2EDUK334A	Carbon 330KΩ ¼W ±10%	2

Key No.	Part No.	Description	Q'ty
FUNCTION SWITCH PCB ASSY			
110	131 0 4001 56400	Function SW PCB Assy	1
	4 2319 23670	Switch, Push 4 Key	1
R1001	R2EDSK821A	Carbon 820Ω ¼W ±10%	1
SLIDE SWITCH PCB ASSY			
111	131 0 4001 56200	Switch PCB Assy (Slide)	1
	4 2319 23690	Switch, Slide 18P	1

NOTES: 1. Part orders must contain Model Number, Part Number and Description.
2. Unless otherwise noted, component parts indicated by parentheses in the column Q'ty are not available.
3. Ordering quantity of screws and/or resistors must be multiple of 10 pcs.

PUSH SWITCH P.C.B. BOTTOM VIEW

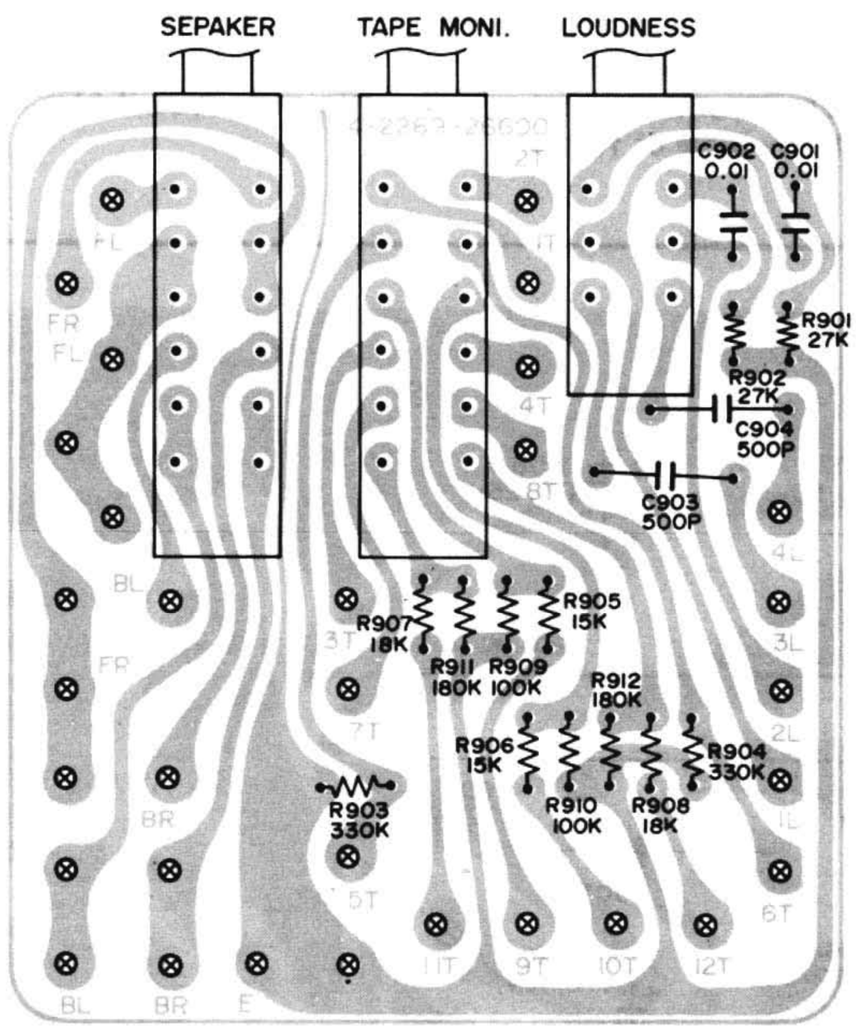

FUNCTION SWITCH P.C.B. BOTTOM VIEW

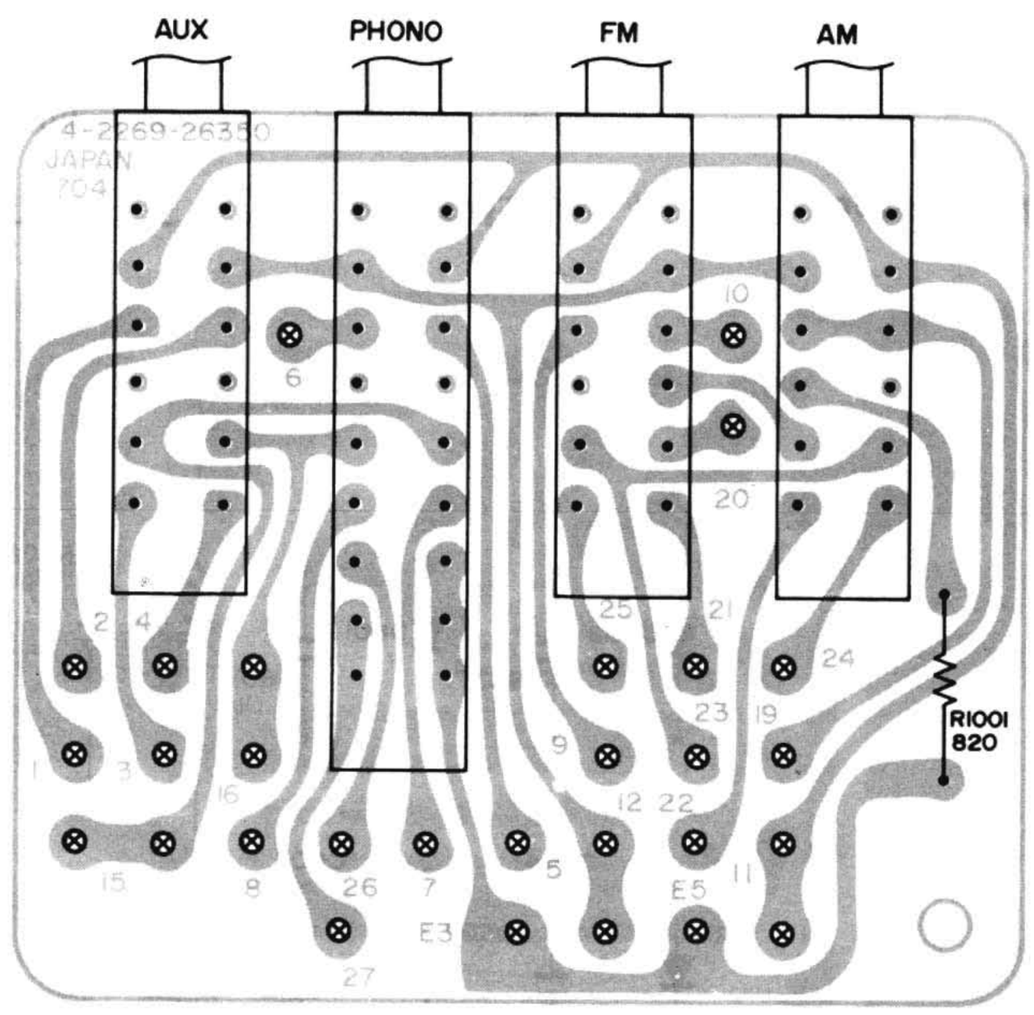

SLIDE SWITCH P.C.B. BOTTOM VIEW

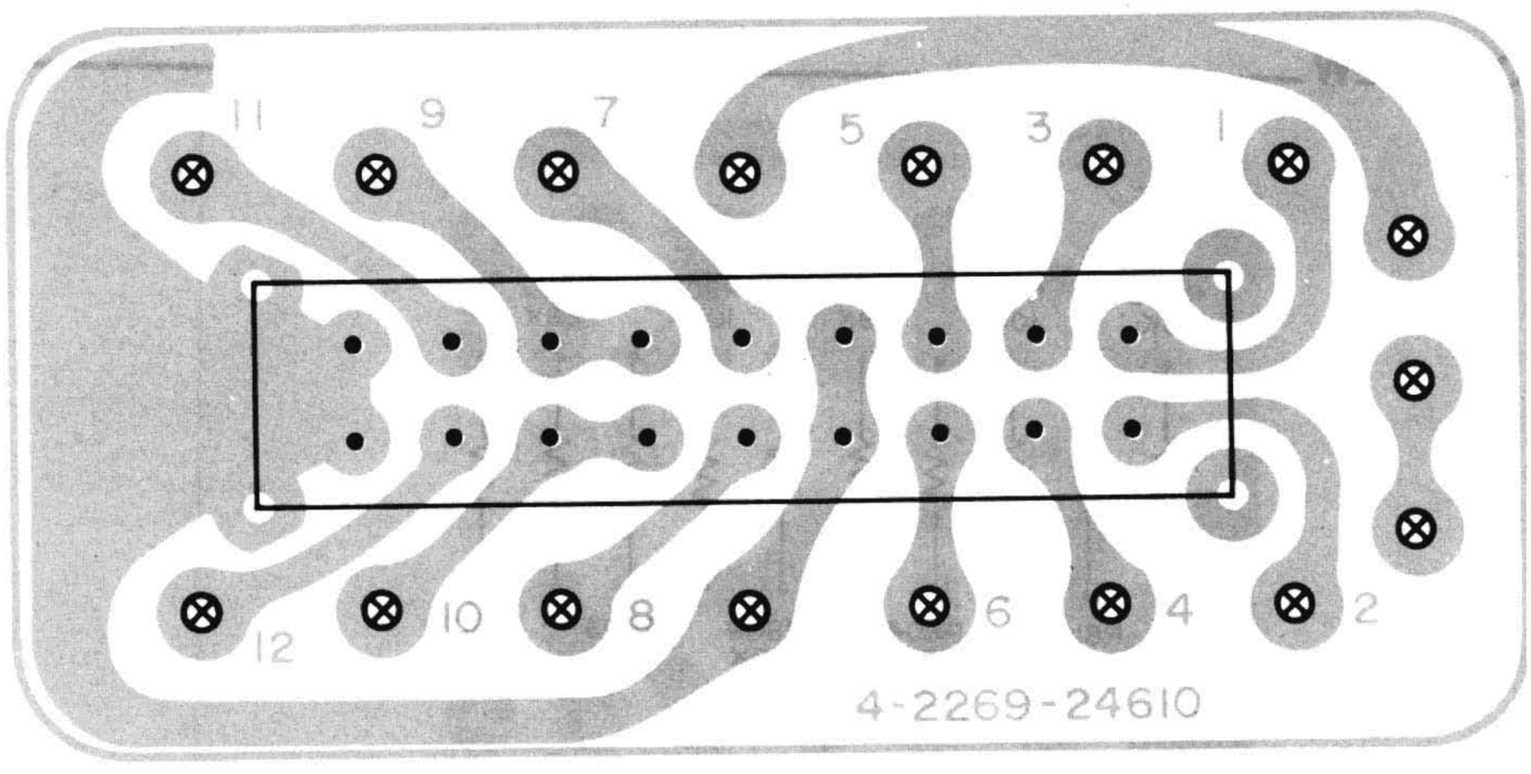

Key No.	Part No.	Description	Q'ty
DIAL LAMP PCB ASSY			
106	131 0 4001 58100	Dial Lamp PCB Assy	1
	4 2359 20930	Fuse Holder	10
	4 6129 20270	Pilot Lamp 6.3V SQ	1
	4 6129 20280	Pilot Lamp	5
	4 6129 20300	Pilot Lamp, Mtx 2	1
	4 6129 20397	Pilot Lamp, Disc.	1
	4 6129 20398	Pilot Lamp, Mtx 1	1
	4 6129 20399	Pilot Lamp, 2 Chl.	1
		RESISTORS	
R701	R2EDSK100A	Carbon 10Ω ¼W ±10%	1

Key No.	Part No.	Description	Q'ty
PILOT (METER) PCB ASSY			
107	131 0 4001 57100	Pilot PCB Assy (Meter)	1
	4 2359 20930	Fuse Holder	4
	4 6129 20280	Pilot Lamp	2

NOTES: 1. Part orders must contain Model Number, Part Number and Description.
2. Unless otherwise noted, component parts indicated by parentheses in the column Q'ty are not available.
3. Ordering quantity of screws and/or resistors must be multiple of 10 pcs.

DIAL LAMP P.C.B. BOTTOM VIEW

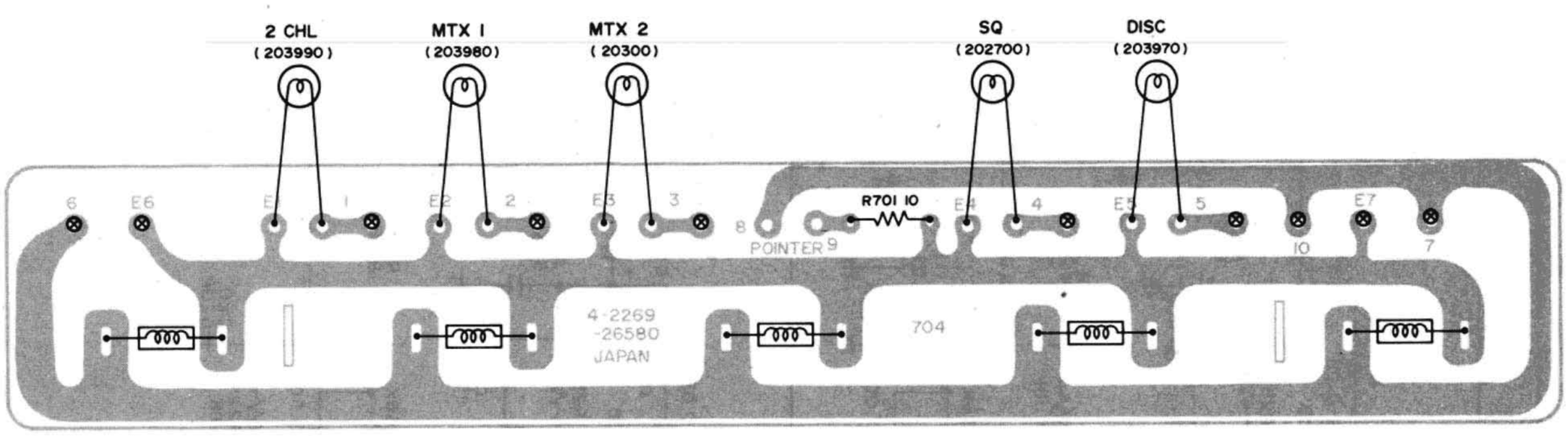

PILOT (METER) P.C.B. BOTTOM VIEW

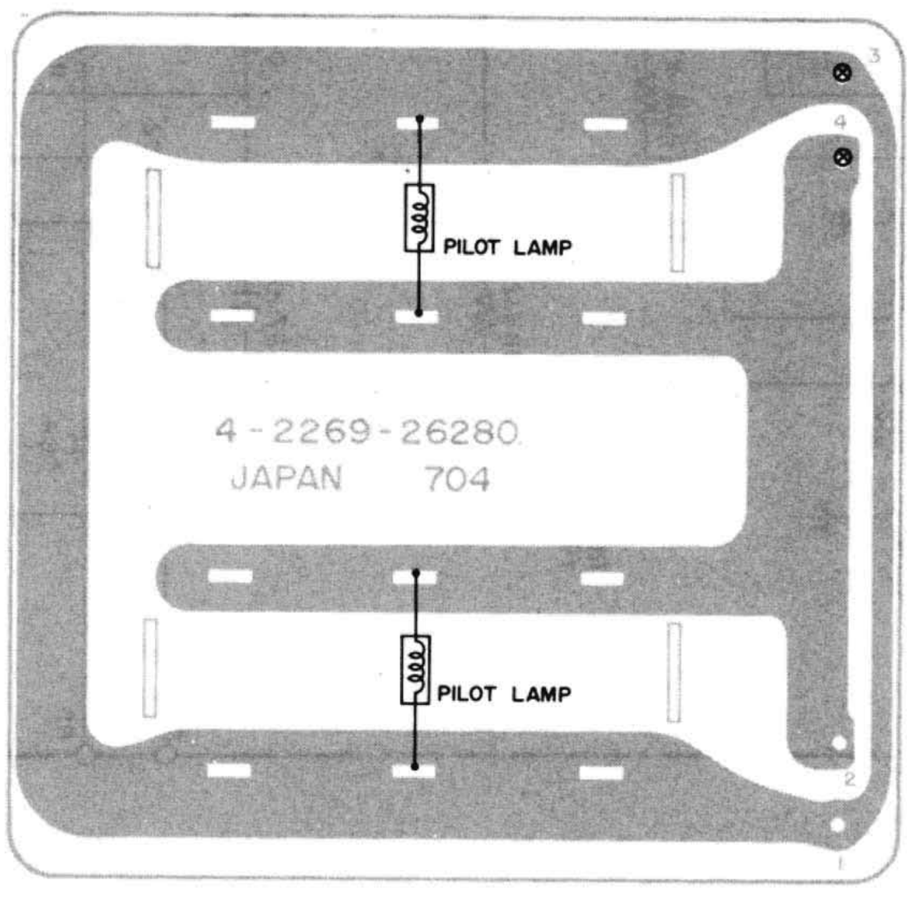

Q01 ~ Q12 2SC537 (W) D,E,F

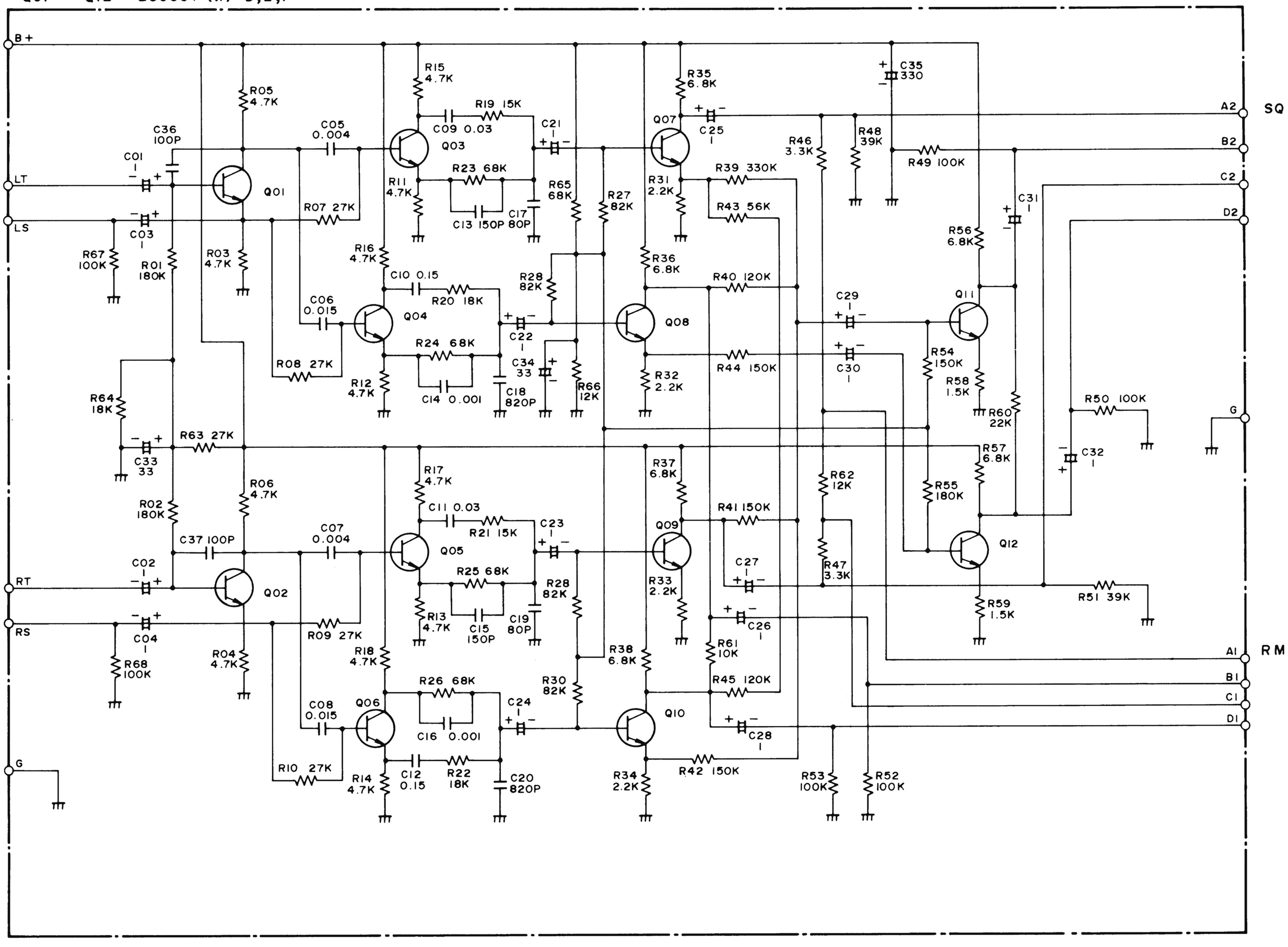

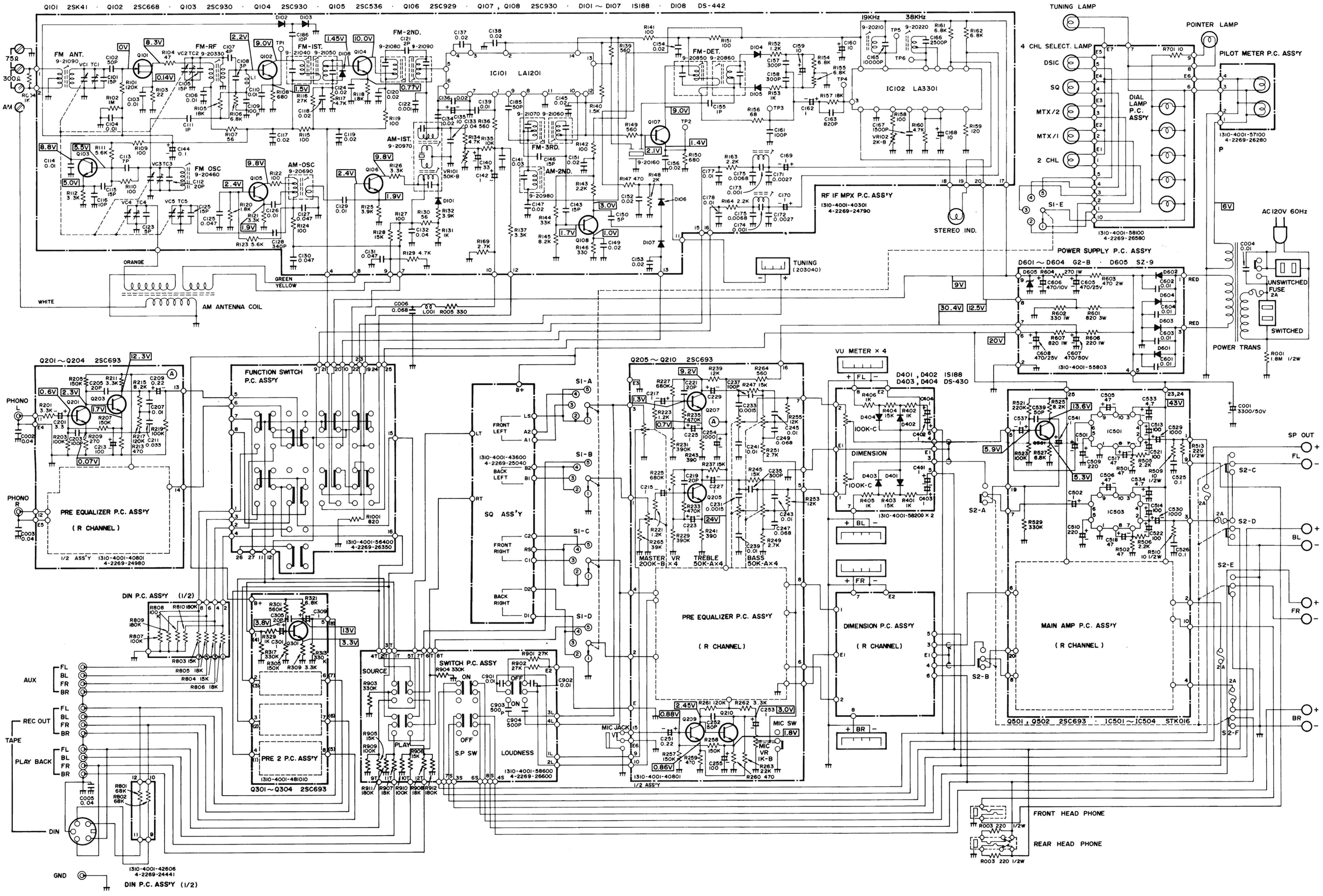
Q101 2SK41 · Q102 2SC668 · Q103 2SC930 · Q104 2SC930 · Q105 2SC536 · Q106 2SC929 · Q107, Q108 2SC930 · D101 ~ D107 1S188 · D108 DS-442
FM ANT. 9-21090
FM-RF 9-20330
FM-IST. 9-21040 9-21050
FM-2ND. 9-21080 9-21090
IC101 LA1201
FM-DET. 9-20850 9-20860
IC102 LA3301
19KHz 38KHz 9-20210 9-20220
FM OSC 9-20460
AM-OSC 9-20690
AM-IST. 9-20970
AM-2ND. 9-20980
FM-3RD. 9-21070 9-21060
9-20160
AM ANTENNA COIL
TUNING (203040)
RF IF MPX P.C. ASS'Y 1310-4001-40301 4-2269-24790
STEREO IND.
TUNING LAMP
POINTER LAMP
4 CHL SELECT. LAMP
DSIC
SQ
MTX/2
MTX/1
2 CHL
SI-E
DIAL LAMP P.C. ASS'Y
PILOT METER P.C. ASS'Y
1310-4001-57100 4-2269-26280
1310-4001-58100 4-2269-26580
POWER SUPPLY P.C. ASS'Y
D601 ~ D604 G2-B · D605 SZ-9
1310-4001-55803
AC 120V 60Hz
UNSWITCHED
FUSE 2A
SWITCHED
POWER TRANS
Q201 ~ Q204 2SC693
PHONO L
PHONO R
PRE EQUALIZER P.C. ASS'Y (R CHANNEL)
1/2 ASS'Y 1310-4001-40801 4-2269-24980
FUNCTION SWITCH P.C. ASS'Y
1310-4001-56400 4-2269-26350
1310-4001-43600 4-2269-25040
SQ ASS'Y
FRONT LEFT
BACK LEFT
FRONT RIGHT
BACK RIGHT
SI-A
SI-B
SI-C
SI-D
Q205 ~ Q210 2SC693
MASTER VR 200K-B×4
TREBLE 50K-A×4
BASS 50K-A×4
MIC JACK
MIC VR 1K-B
MIC SW
1310-4001-40801
VU METER × 4
D401, D402 1S188
D403, D404 DS-430
DIMENSION
1310-4001-58200 × 2
DIMENSION P.C. ASS'Y (R CHANNEL)
MAIN AMP P.C. ASS'Y (R CHANNEL)
Q501, Q502 2SC693 · IC501 ~ IC504 STK016
SP OUT
FL
BL
FR
BR
S2-A
S2-B
S2-C
S2-D
S2-E
S2-F
DIN P.C. ASS'Y (1/2)
Q301 ~ Q304 2SC693
PRE 2 P.C. ASS'Y
1310-4001-48101O
SWITCH P.C. ASSY
SOURCE
PLAY
S.P SW
LOUDNESS
1310-4001-58600 4-2269-26600
AUX
REC OUT
TAPE
PLAY BACK
DIN
GND
1310-4001-42606 4-2269-24441
FRONT HEAD PHONE
REAR HEAD PHONE

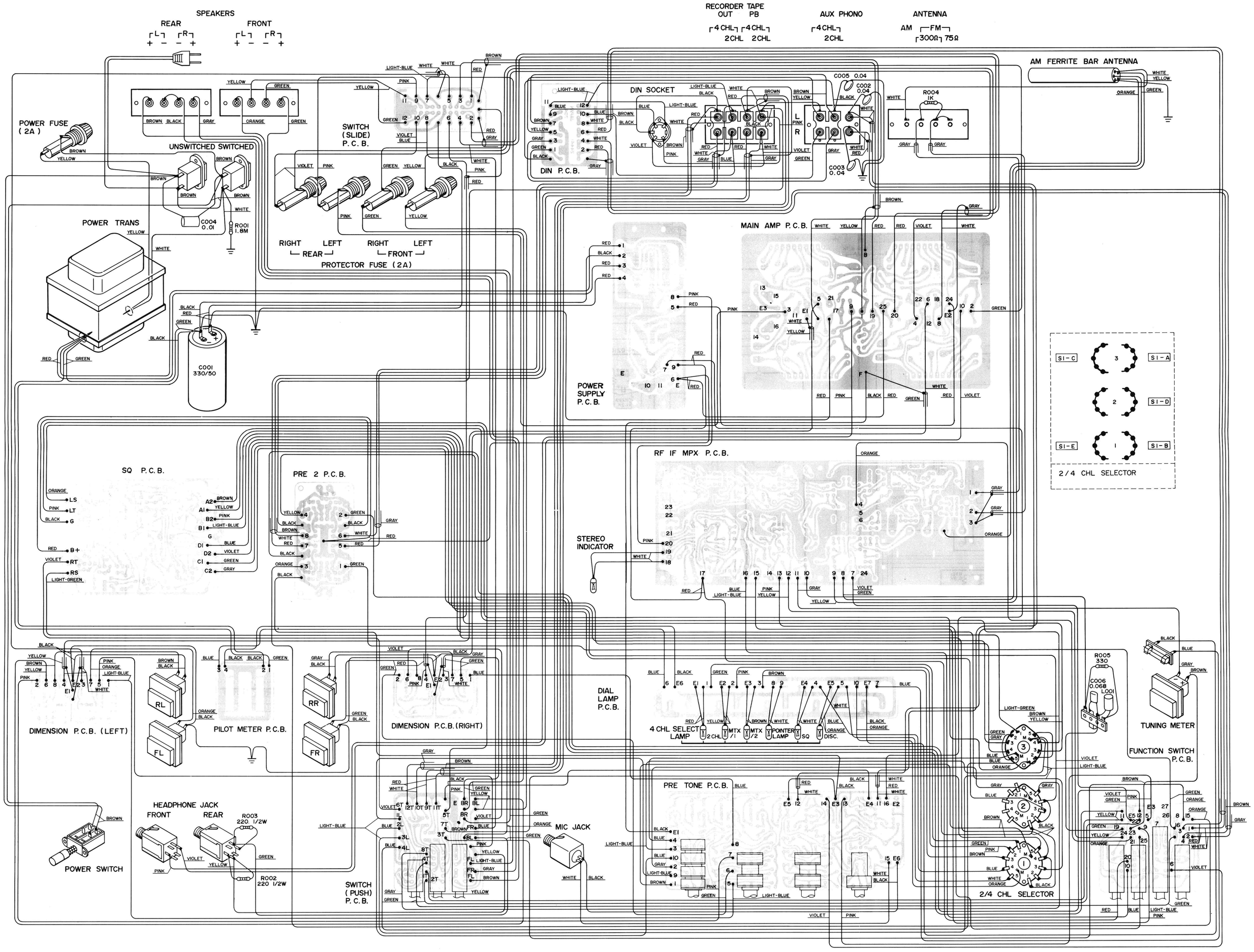
SPEAKERS
REAR
FRONT
RECORDER TAPE
OUT PB
4CHL 4CHL
2CHL 2CHL
AUX PHONO
4CHL
2CHL
ANTENNA
AM FM
300Ω 75Ω
AM FERRITE BAR ANTENNA
POWER FUSE (2A)
UNSWITCHED SWITCHED
SWITCH (SLIDE) P.C.B.
DIN SOCKET
DIN P.C.B.
C005 0.04
C002 0.04
C003 0.04
R004 1K
C004 0.01
R001 1.8M
POWER TRANS
C001 330/50
RIGHT LEFT RIGHT LEFT
REAR FRONT
PROTECTOR FUSE (2A)
MAIN AMP P.C.B.
POWER SUPPLY P.C.B.
S1-C S1-A
S1-D
S1-E S1-B
2/4 CHL SELECTOR
SQ P.C.B.
PRE 2 P.C.B.
RF IF MPX P.C.B.
STEREO INDICATOR
DIMENSION P.C.B. (LEFT)
PILOT METER P.C.B.
DIMENSION P.C.B. (RIGHT)
DIAL LAMP P.C.B.
4 CHL SELECT LAMP
2CHL MTX /1 MTX /2 POINTER LAMP SQ DISC.
R005 330
C006 0.068
L001
TUNING METER
FUNCTION SWITCH P.C.B.
HEADPHONE JACK
FRONT REAR
R003 220 1/2W
R002 220 1/2W
POWER SWITCH
SWITCH (PUSH) P.C.B.
MIC JACK
PRE TONE P.C.B.
2/4 CHL SELECTOR