SANYO

FILE NO.

Service Manual

Separate Mini Component System

DC-X8CT (UK)
DC-X8CM (UK)
DC-088C (XE)
DC-088C (SP)
RD-X8 (UK-2)
RD-088 (XE)
RD-088 (SP)
MDG-088 (XE)

Exapmle: DC-X8CM+RD-X8

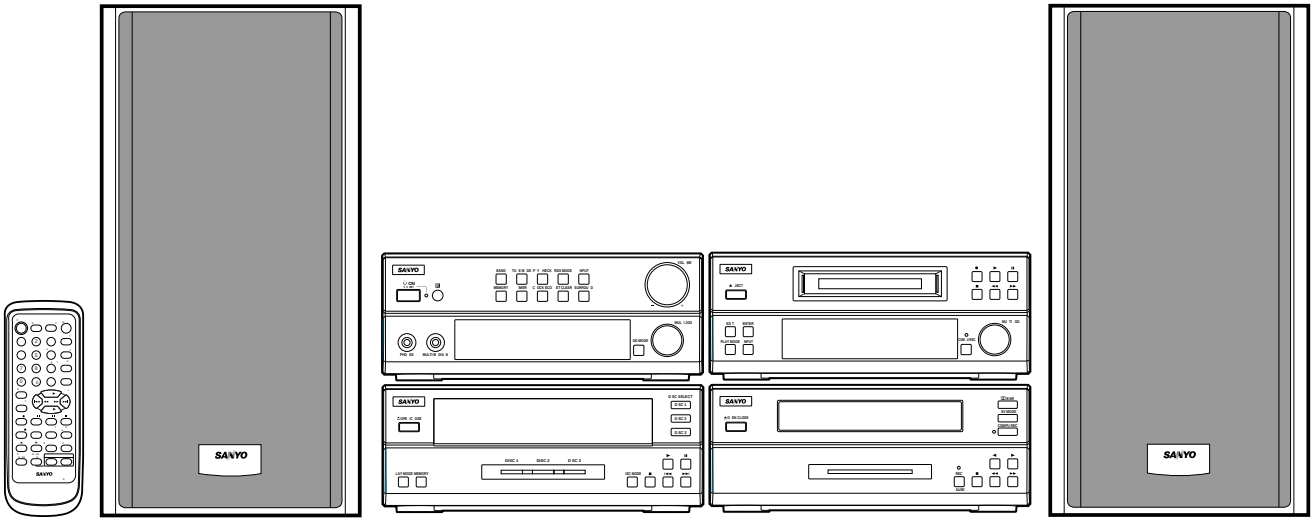

Tape Deck RD-X8 (UK-2)
(Option for DC-X8CM/UK)
Tape Deck RD-088 (XE)
(Option for DC-088C/XE)
Tape Deck RD-088 (SP)
(Option for DC-088C/SP)
MD Deck MDG-088 (XE)
(Option for DC-088C/XE)

PRODUCT CODE No.
129 607 06 (DC-X8CT/UK)
129 607 07 (DC-X8CM/UK)
129 607 01 (DC-088C/XE)
129 607 08 (DC-088C/SP)
142 802 06 (RD-X8/UK-2)
142 802 01 (RD-088/XE)
142 802 07 (RD-088/SP)
137 106 01 (MDG-088/XE)

REFERENCE No. SM5810221

CONTENTS

Specifications 2
Arrangement 3
System connections 4
What to do if 7
Laser beam safety precaution 8

TUNER & AMPLIFIER SECTION
Tuner adjustments 9
Exploded view 10
Parts list 11
IC block diagram & description 16
FL display description 19
Schematic diagram
(Front) 22
(Amplifier) 26
(Tuner) 30
Wiring diagram
(Power transformer, primary & secondary P.W.Board) 20
(Speaker, Headphone & Sub power transformer) 21
(Front) 24
(Amplifier) 28
(Tuner) 32
Wiring connection 34

CD SECTION
CD pick-up maintenance 35
CD player adjustments 35
Exploded view
(Cabinet & Chassis) 36
(CD mechanism) 39
(CD base mechanism) 40
Parts list
(Cabinet & Chassis) 37
(CD mechanism) 40
(CD base mechanism) 40
Wiring connection 41
Schematic diagram
(CD) 42
Wiring diagram
(CD, Front & Open close switch) 44
IC block diagram & description 48

TAPE DECK SECTION
Tape adjustments 49
Exploded view
(Cabinet & Chassis) 50
(Tape mechanism) 54
Parts list
(Cabinet & Chassis) 51
(Tape mechanism) 54
IC block diagram & description 54
Wiring connection 56
Memo 57
Schematic diagram
(Tape deck) 58
Wiring diagram
(Deck, Deck switch, Deck switch 2 & Deck LED) 60

MD DECK SECTION
Replacement and lubrication of the MD door 62
IC block diagram & description 62
Exploded view
(Cabinet,Chassis & MD mechanism) 66
Parts list
(Cabinet & Chassis) 67
(MD mechanism) 68
Wiring connection 69
Schematic diagram
(Front) 70
(Power supply) 74
Wiring diagram
(Front, LED1, & LED2) 72
(Power supply) 75
FL display description 76

SPECIFICATIONS

TUNER/AMPLIFIER SECTION(JCX-X8/JCX-088)

Reception frequency ..... FM : 87.5 - 108 MHz
AM : 522 - 1,611 kHz
Output power ..... 30W x 2 (at 6 ohm,10%distortion)
Inputs ..... VIDEO (AUDIO) : 500 mV/50k ohms
MULTI MEDIA IN : 500 mV/50k ohms
Outputs..... SPEAKERS : 6 ohms
PHONES : 8 - 32 ohms
SUB WOOFER OUT : 10k ohms
Power requirements ..... AC 230V, 50 Hz
Power comsumption 80W
1.0W (Eco On standby mode)
15W (Eco Off standby mode)
Dimensions ..... 225 (W) x 89 (H) x 272 (D) mm
Weight 3.6kg

MD DECK SECTION (MDG-X8/MDG-088)

Sampling frequency ..... 44.1 kHz
Pick-up ..... Optical 3-beam semiconductor laser
Laser output ..... 6.85 mW (Continuous wave max.)
Wave length ..... 685 nm
Wow flutter ..... Below measurable limits
Recording system ..... Magnetic moduration over write
Input ..... OPTICAL DIGITAL IN : Optical
Power supply ..... Supplied from the Tuner/Amplifier
Dimensions ..... 225 (W) x 89 (H) x 272 (D) mm
Weight 1.7kg

CD SECTION (CP-X8/CP-088, CD CHANGER)

Type ..... Changer, 3-disc
Channels ..... 2-channel stereo
Sampling frequency ..... 44.1 kHz
Pick-up ..... Optical 3-beam semiconductor laser
Laser output ..... 0.6 mW (Continuous wave max.)
Wave length ..... 790 nm
Frequency response ..... 20 Hz to 20 kHz
Wow/flutter ..... Below measurable limits
Output ..... OPTICAL DIGITAL OUT : Optical
Power supply ..... Supplied from the Tuner/Amplifier
Dimensions ..... 225 (W) x 89 (H) x 272 (D) mm
Weight ..... 2.1 kg

SPEAKER SYSTEM (SX-X8/SX-088)

Type ..... 3 way bass reflex
Built-in magnetic stray field compensation
Unit used ..... Woofer : 15 cm cone type
Mid range : 8 cm cone type
Tweeter : 3.5 cm balance driver
Maximum power-handling capacity ..... 60W (peak)
Nominal impedance ..... 6 ohms
Dimensions ..... 185 (W) x 358 (H) x 255 (D) mm

TAPE DECK SECTION (RD-X8/RD-088)

Track system ..... 4-track, 2-channel stereo
Frequency response ..... 50 Hz to 16 kHz (CrO_2 tape)
50 Hz to 15 kHz (Normal tape)
Signal-to-noise ratio ..... 60dB (Dolby B NR ON)
Wow/flutter ..... 0.12%(WRMS)
Fast forward/rewind time .. Approx.110 sec. (C-60)
Power supply ..... Supplied from the Tuner/Amplifier
Dimensions ..... 225 (W) x 89(H) x 272 (D) mm
Weight ..... 2.0 kg

Specifications subject to change without notice.

ARRAMGEMENT

COMPONENT SYSTEM COMPOSITION

System DC-X8CT/UK

Tuner/Amplifier: JCX-X8
CD changer: CP-X8
Tape deck: RD-X8
Speaker system: SX-X8

System DC-X8CM/UK

Tuner/Amplifier: JCX-X8
CD changer: CP-X8
MD deck: MDG-X8
Speaker system: SX-X8
Tape deck: SANYO RD-X8 (Option)

System DC-088C/XE

Tuner/Amplifier: JCX-088
CD changer: CP-088
Speaker system: SX-088
Tape deck: S ANYO RD-088(Option)
MD deck: SANYO MDG-088 (Option)

System DC-088C/SP

Tuner/Amplifier: JCX-088
CD changer: CP-088
Speaker system: SX-088
Tape deck: S ANYO RD-088(Option)

Example 1

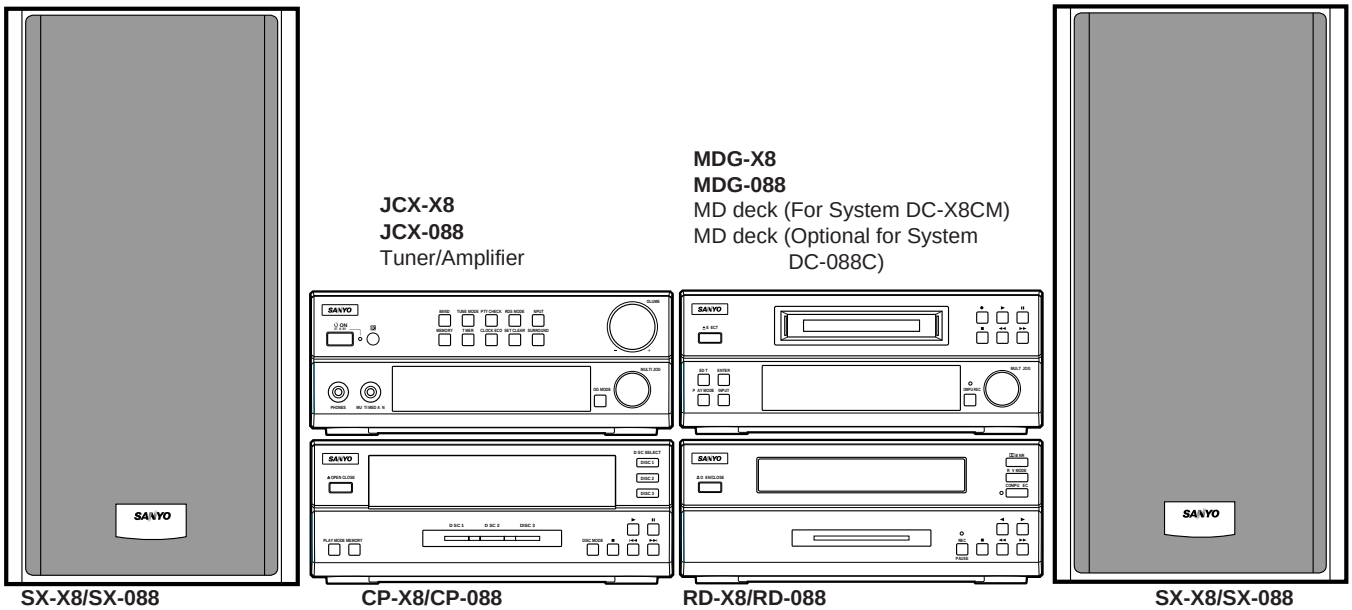

Example 2

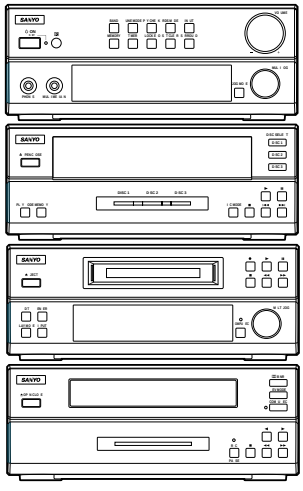

Example 3

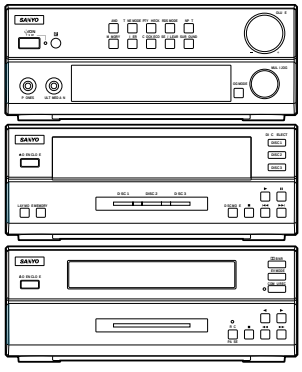

Example 4

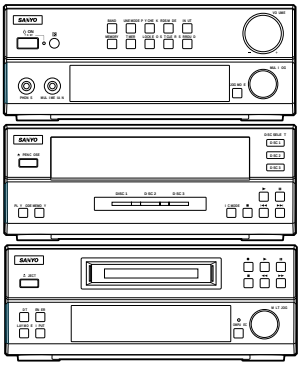

CAUTION:
Placing the system in a well ventilated area is strongly recommended. Do not place any object on the top of the JCX-X8/JCX-088 Tuner/Amplifier. The cabinet of the Tuner/Amplifier warms up when the system is used for a long time, but it is not a malfunction.

SYSTEM CONNECTIONS

Notes:

- **Do not connect the mains lead to an AC outlet until all connections have been made.**
- The system is not completely disconnected from the mains when the ⏻/ON button is set to the ⏻ position.
- To prevent a noise interference from the mains, the core clamp is attached to the mains lead. Do not remove it.

For System DC-X8CT:

Example for the flat connection lead connection

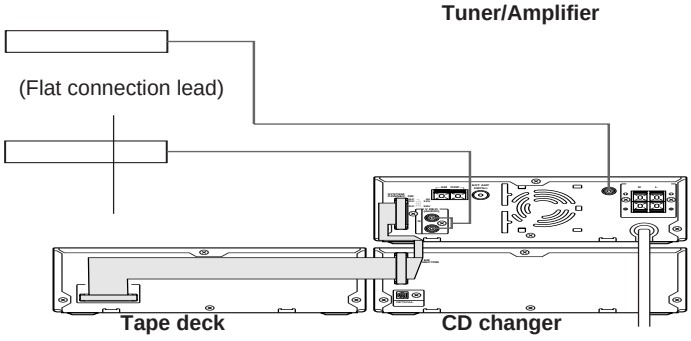

For System DC-X8CM:

Example for the flat connection lead connection when using only the system DC-X8CM

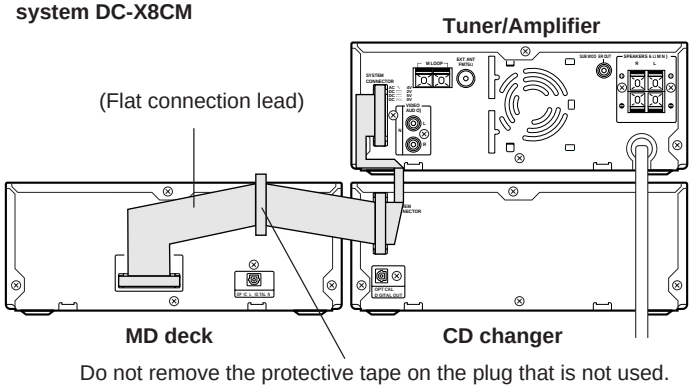

Do not remove the protective tape on the plug that is not used.

System connections

Example:
System DC-X8CM and optional Tape deck

For System DC-X8CM:
Notes on the flat connection lead
When using the system DC-X8CM and optional Tape deck, remove the protective tape on the plug before connecting.

To connect, push the middle of the plug and insert it until it clicks.

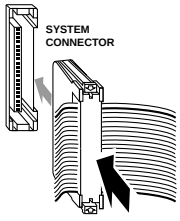

If you have difficulty inserting the plug, turn it over and reinsert it.

To disconnect, while pressing both latches, remove the plug.

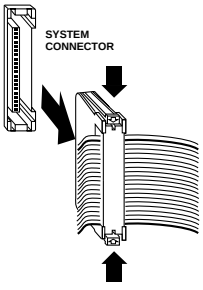

Before connecting, remove the cap on this socket.

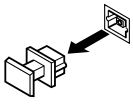

Amplified subwoofer

Video equipment/
DVD player

(Audio leads, not supplied)

MD deck

Tuner/Amplifier

Tape deck

CD changer

(Flat connection lead)

(Optical cable, supplied with the MD deck)

To an AC outlet

SYSTEM CONNECTIONS

Notes: Please refer to the notes for each items on the page 4.

For System DC-088C/XE

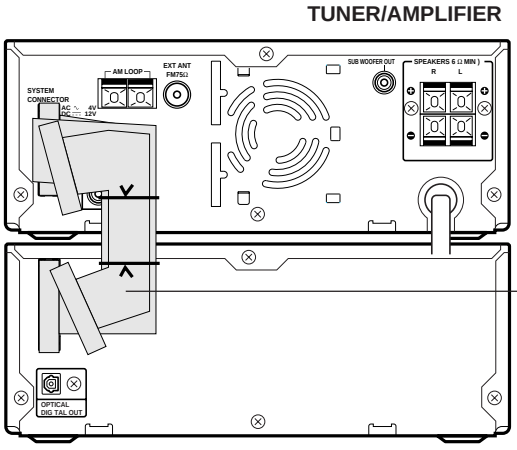

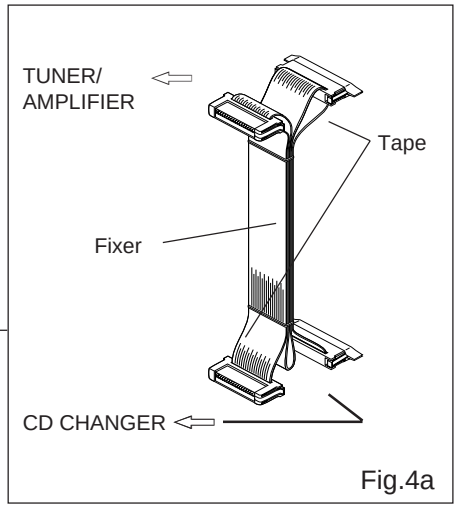

Fig.4a

Example1: System DC-088C + Tape deck + MD deck

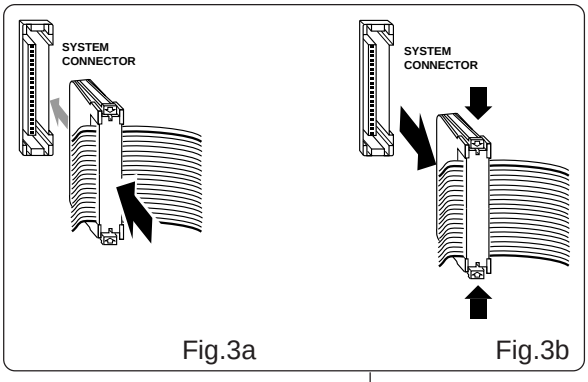

Fig.3a Fig.3b

Audio leads, not supplied

Amplified subwoofer

Auxiliary equipment/ DVD player

MD DECK

TUNER/AMPLIFIER

TAPE DECK

CD CHANGER

Flat connection lead

Optical cable, supplied with the MD deck

Fig.3

SYSTEM CONNECTIONS

Notes: Please refer to the notes for each items on the page 4.

For System DC-088C/SP

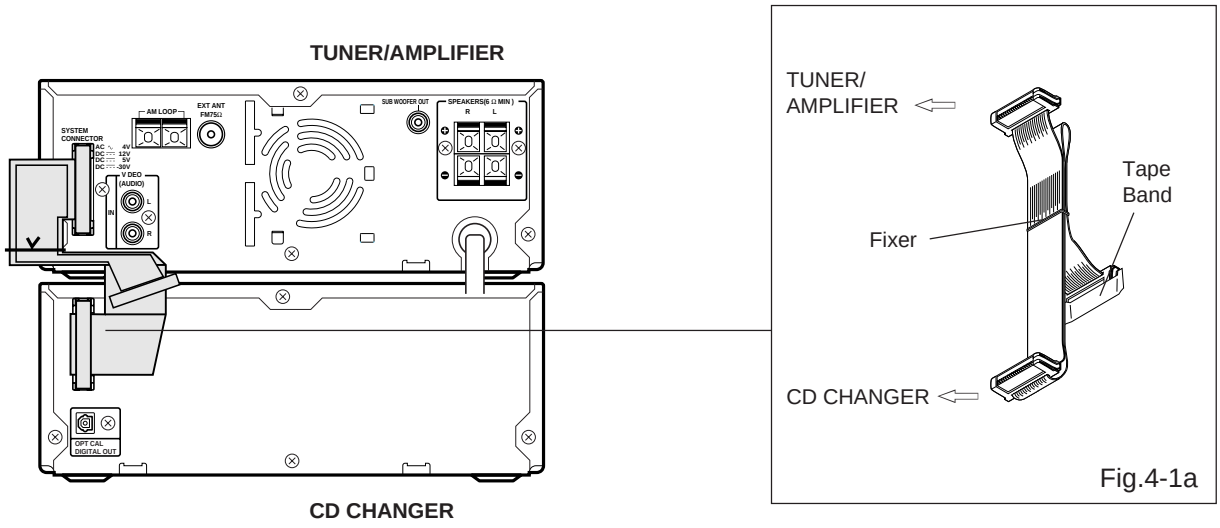

Fig.4-1

Example: System DC-088C + Tape deck

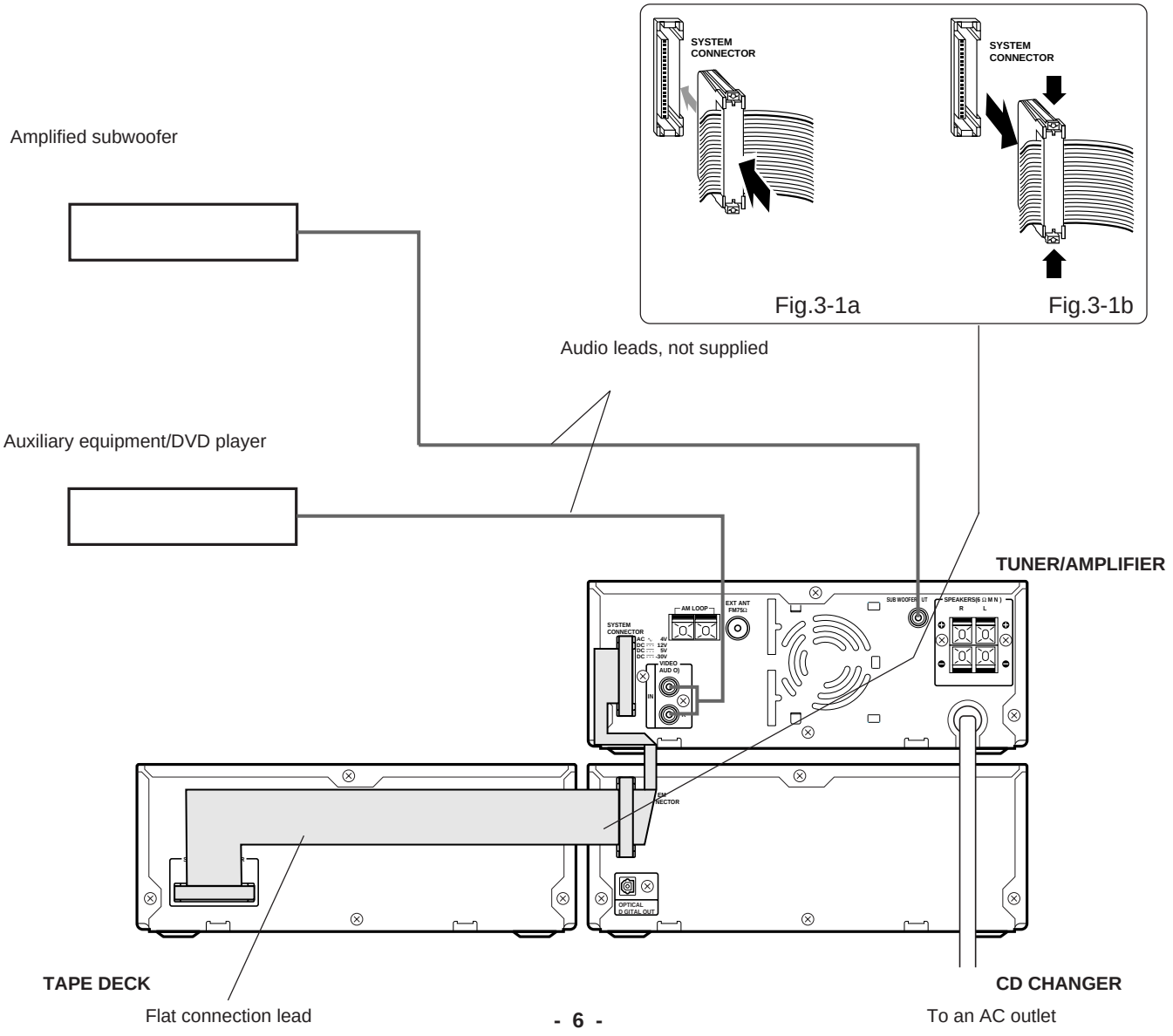

SYSTEM CONNECTIONS

Aerials

In areas close to a transmitter the simple indoor aerial is sufficient to receive broadcasts. Extend the aerial wire as straight as possible and, while listening to the sound from the system, secure it in a position which yields minimal distortion and noise.

AM loop aerial

Assemble the loop aerial as shown in figure. Unwind the aerial wires, then connect them to the AM LOOP terminals. Place the loop aerial in a position which yields the best AM reception, or attach it to a wall or other surface as shown in figure.

Note:
To minimize noise, the speaker, mains and any other leads should not come close to the indoor or external aerial lead and AM loop aerial. Do not place the aerial leads close to the system.

Speakers

When connecting the speakers, make sure that (+) and (–) polarities are matched properly. Otherwise, the sound may appear to be lacking in the bass range and in stability.
Connect the speaker wire with the stripe to the red terminal (+) and the other wire to the black terminal (–).
Note:
If desired, the speaker grilles can be removed.

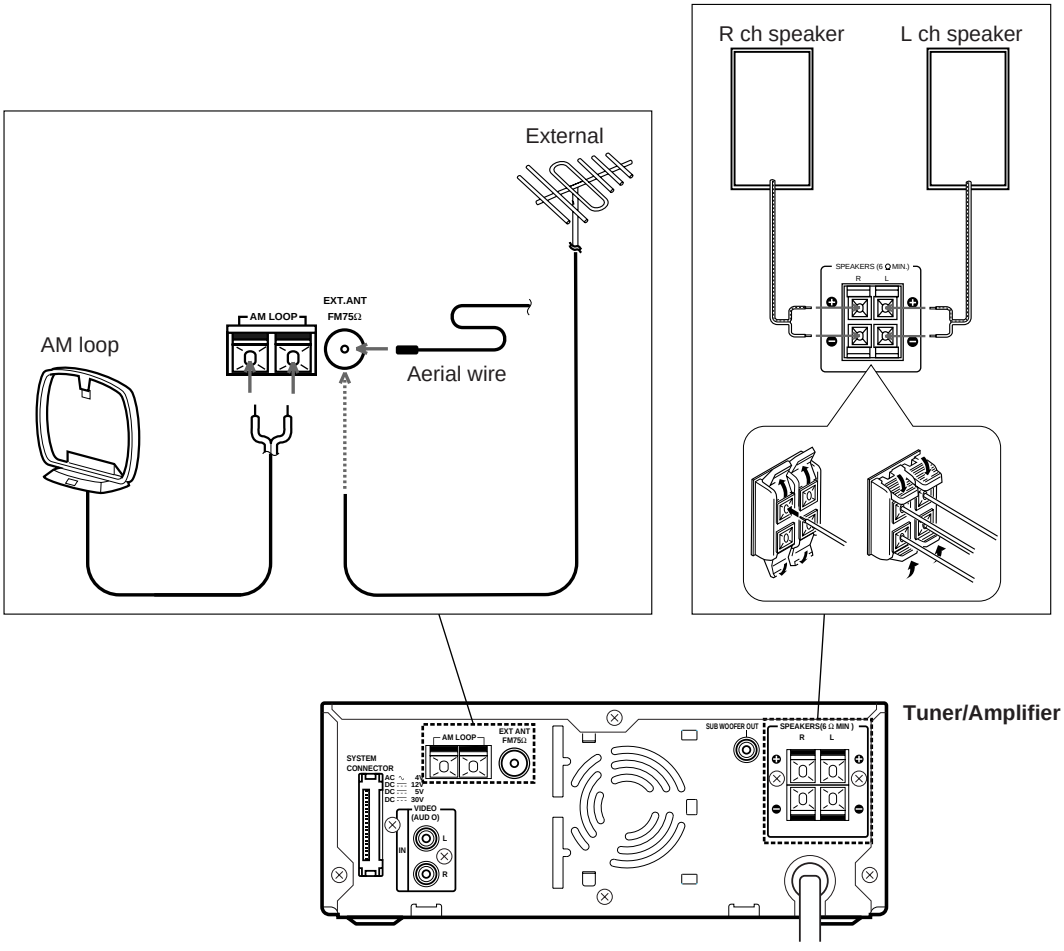

WHAT TO DO IF

If the operation of the system or display is not normal,

1. Disconnect the mains lead.
2. Press the RESET button (bottom of the Tuner/Amplifier) for at least 30 seconds.
3. Connect the mains lead.
4. Resume operation.

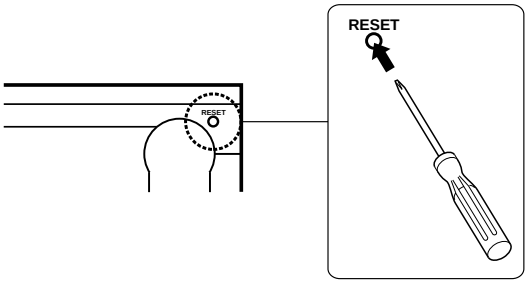

LASER BEAM SAFETY PRECAUTION

Notes:
- For Tuner/Amplifier: The rating label is located on the bottom of the unit.
- The unit is not disconnected from the mains unless it is unplugged from the AC outlet.

For DC-X8C/UK, DC-X8CT/UK & DC-X8CM/UK

CD changer

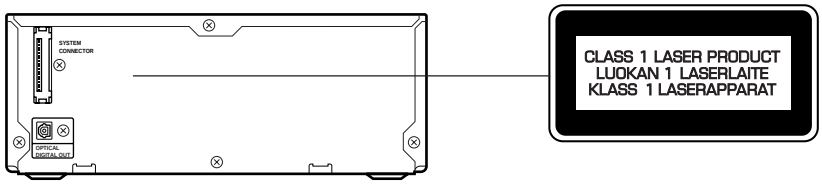

CAUTION

THIS PRODUCT CONTAINS A LOW POWER LASER DEVICE, TO ENSURE CONTINUED SAFETY DO NOT REMOVE ANY COVERS OR ATTEMPT TO GAIN ACCESS TO THE INSIDE OF THE PRODUCT.
REFER ALL SERVICING TO QUALIFIED PERSONNEL.

MD deck

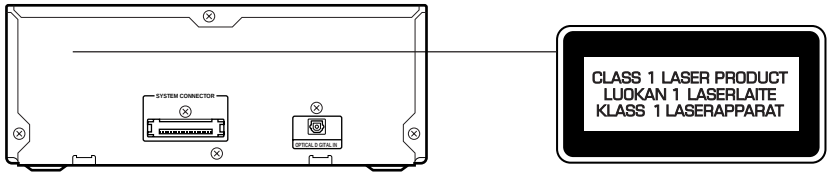

CAUTION

THIS PRODUCT CONTAINS A LOW POWER LASER DEVICE, TO ENSURE CONTINUED SAFETY DO NOT REMOVE ANY COVERS OR ATTEMPT TO GAIN ACCESS TO THE INSIDE OF THE PRODUCT.
REFER ALL SERVICING TO QUALIFIED PERSONNEL.

For DC-088C/XE & DC-088C/SP

- Pick-up that emits a laser beam is used in this CD player section.

(CD CHANGER)

CAUTION – INVISIBLE LASER RADIATION WHEN OPEN AND INTERLOCKS DEFEATED. AVOID EXPOSURE TO BEAM.
ADVARSEL – USYNLIG LASER STRÅLING VED ÅBNING, NÅR SIKKERHEDSAFBRYDERE ER UDE AF FUNKTION, UNDGÅ UDS ÆTTELSE FOR STRÅLING.
VARNING – OSYNLIG LASER STRÅLNING NÄR DENNA DEL ÄR ÖPPNAD OCH SPÄRR ÄR URKOPPLAD. STRÅLEN ÄR FARLIG.
VORSICHT – UNSICHTBARE LASERSTRAHLUNG TRITT AUS, WENN DECKEL GEÖFFNET UND WENN SICHERHEITSVERRIEGELUNG ÜBERBRÜCKT IST. NICHT, DEM STRAHL AUSSETZEN.
VARO – AVATTAESSA JA SUOJALUKITUS OHITETTAESSA OLET ALTTIINA NÄKYMÄTTÖMÄLLE LASERSÄTEILYLLE. ÄLÄ KATSO SÄTEESEEN.

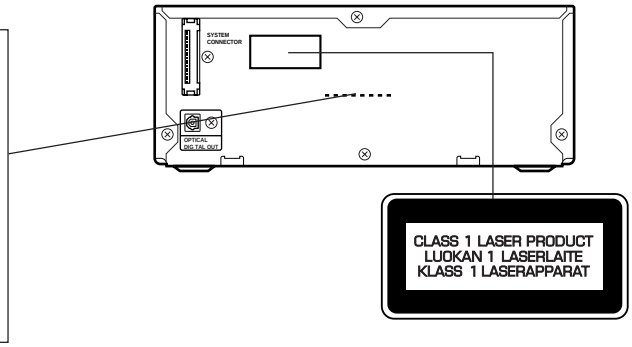

(MD DECK) (XE only)

CAUTION – INVISIBLE LASER RADIATION WHEN OPEN AND INTERLOCKS DEFEATED. AVOID EXPOSURE TO BEAM.
ADVARSEL – USYNLIG LASER STRÅLING VED ÅBNING, NÅR SIKKERHEDSAFBRYDERE ER UDE AF FUNKTION, UNDGÅ UDS ÆTTELSE FOR STRÅLING.
VARNING – OSYNLIG LASER STRÅLNING NÄR DENNA DEL ÄR ÖPPNAD OCH SPÄRR ÄR URKOPPLAD. STRÅLEN ÄR FARLIG.
VORSICHT – UNSICHTBARE LASERSTRAHLUNG TRITT AUS, WENN DECKEL GEÖFFNET UND WENN SICHERHEITSVERRIEGELUNG ÜBERBRÜCKT IST. NICHT, DEM STRAHL AUSSETZEN.
VARO – AVATTAESSA JA SUOJALUKITUS OHITETTAESSA OLET ALTTIINA NÄKYMÄTTÖMÄLLE LASERSÄTEILYLLE. ÄLÄ KATSO SÄTEESEEN.

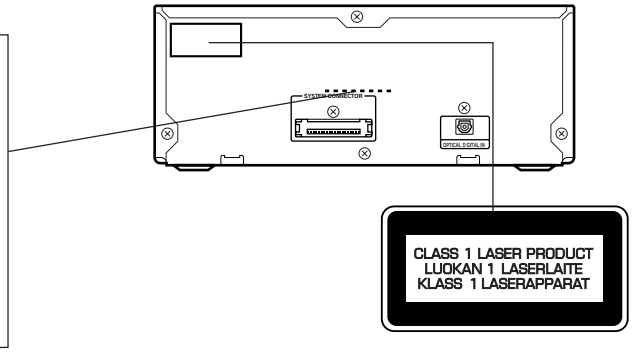

TUNER ADJUSTMENTS

- Use a plastic screw driver for adjustments.
- MODE : ST (Stereo)
- Speaker impedance : 4 ohm
- TUNING
  FM : 87.5 - 108MHz
  MW: 522 - 1611kHz

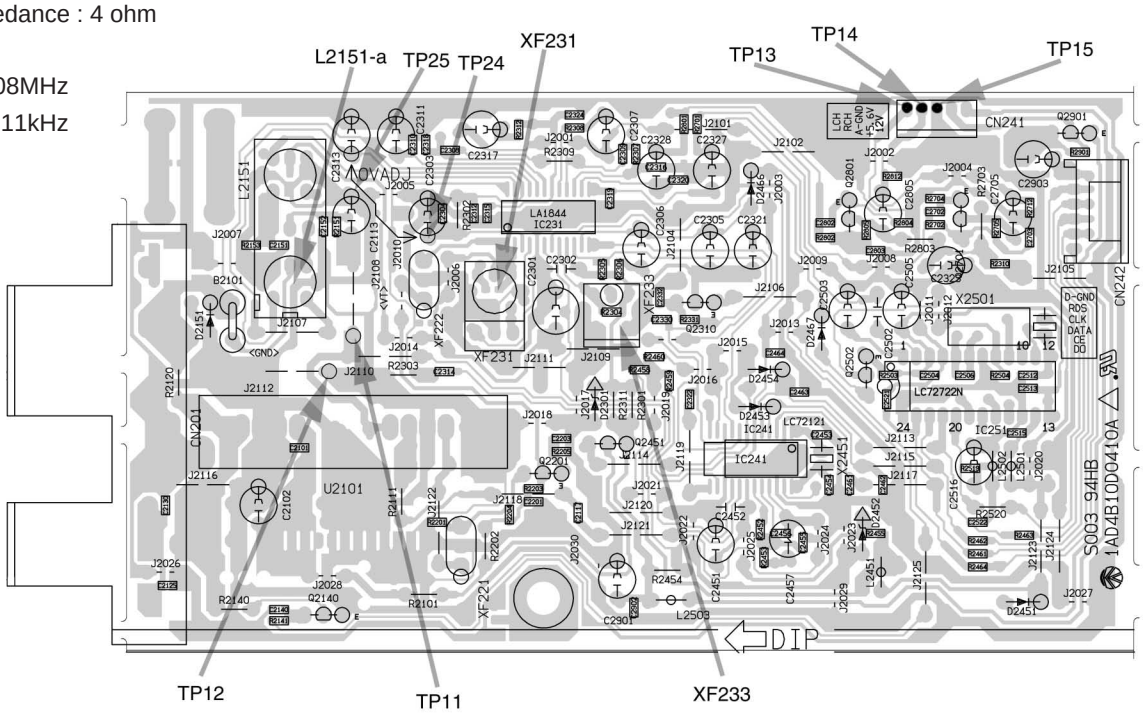

Standatd Input: 60dB
Antenna : 75 unbalanced , Modulation : 1 kHz
Dev. : ±22.5kHz(MONO) 22.5kHz(STEREO) ±6.75kHz(PILOT)

1. FM

Step	Adjusting Circuit	Connection Input	Connection Output	SG Frequency	Set Position	Adjustment	Remark
1	IF(0V) Adjustment	98.0MHz.Input Level FM Antenna SG=66dB μ V	Alignment voltage IC231 3-22pin(TP24,25) is 0.0 ± 0.05V	98MHz	Low	XF233	Alignment voltage IC231 3-22pin is 0.0 ± 0.05V
2	Cover Voltage	---	Connect Digital DC voltmeter to	87.5MHZ	Low	---	more than 0.8V
		---	TP11(H), TP12(E).	108.0MHZ	High	---	less than 9.0V

SG Modulation : 1kHz, 30%
Antenna, IRE Loop, Distance : 60 cm

2. MW

Step	Adjusting Circuit	Connection Input	Connection Output	SG Frequency	Set Position	Adjustment	Remark
1	Cover Voltage	---	Connect Digital DC voltmeter to	522kHZ	Low	L2153	more than 0.8V
		---	TP11(H)and TP12(E).	1611kHZ	High		less than 9.0V
2	Tracking	Connect AM SG to Test loop Ant.	Connect to VTVM point TP13(L)or TP14(R) and TP15(E).	603KHZ	Low	L2151-a	AF Maximum
				1404kHZ	High		

EXPLODED VIEW (CABINET & CHASSIS)

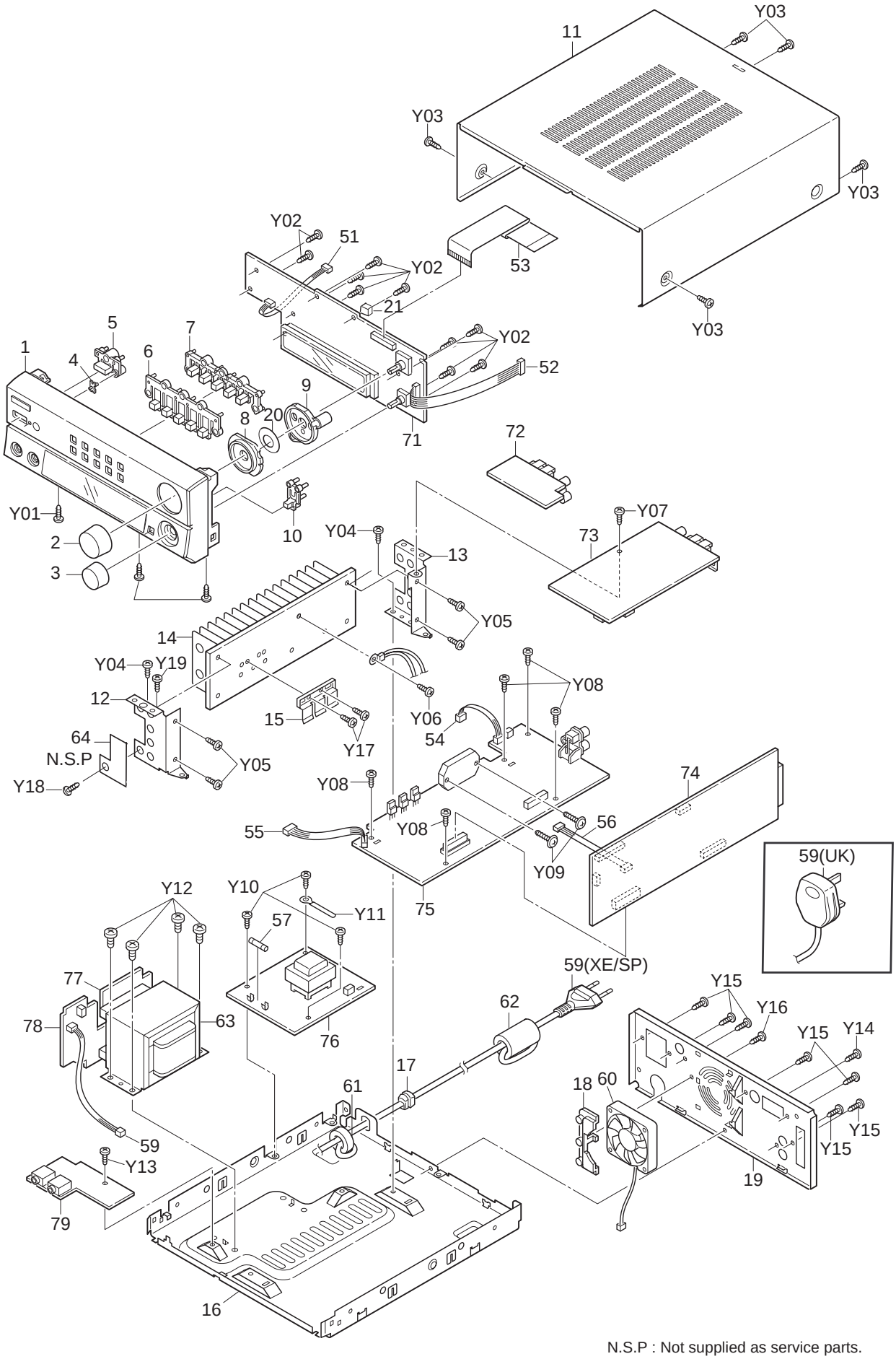

N.S.P : Not supplied as service parts.

PARTS LIST

PRODUCT SAFETY NOTICE

EACH PRECAUTION IN THIS MANUAL SHOULD BE FOLLOWED DURING SERVICING. COMPONENTS IDENTIFIED WITH THE IEC SYMBOL ⚠ IN THE PARTS LIST AND THE SCHEMATIC DIAGRAM DESIGNATED COMPONENTS IN WHICH SAFETY CAN BE OF SPECIAL SIGNIFICANCE. WHEN REPLACING A COMPONENT IDENTIFIED BY ⚠, USE ONLY THE REPLACEMENT PARTS DESIGNATED, OR PARTS WITH THE SAME RATINGS OF RESISTANCE, WATTAGE OR VOLTAGE THAT ARE DESIGNATED IN THE PARTS LIST IN THIS MANUAL. LEAKAGE-CURRENT OR RESISTANCE MEASUREMENTS MUST BE MADE TO DETERMINE THAT EXPOSED PARTS ARE ACCEPTABLY INSULATED FROM THE SUPPLY CIRCUIT BEFORE RETURNING THE PRODUCT TO THE CUSTOMER.

CAUTION : Regular type resistors and capacitors are not listed. To know those values, refer to the schematic diagram.
Regular type resistors are less than 1/4 W Carbon type and Chip type resistors.
Regular type capacitors are less than 50 V and less than 1000 µF type of Ceramic type, Electrolytic type and Chip type.

N.S.P : Not supplied as service parts.

PACKING & ACCESSORIES

REF.NO.	PART NO.	DESCRIPTION
	614 318 0616	CARTON CASE, OUTER CARTON(DC-X8CT/UK)
	614 318 0623	CARTON CASE, OUTER CARTON(DC-X8CM/UK)
	614 317 8040	CARTON CASE, OUTER CARTON(DC-088C/XE)
	614 319 0974	CARTON CASE, OUTER CARTON(DC-088C/SP)
	614 318 0647	CUSHION,SPACE,ACCESSORY (DC-X8CT/UK & DC-X8CM/UK)
	614 317 8071	CUSHION,SPACE,ACCESSORY (DC-088C/XE & DC-088C/SP)
	614 317 7913	CARTON CASE,INNER SLEEVE (DC-X8CT/UK & DC-X8CM/UK)
	614 317 7937	CARTON CASE,INNER SLEEVE (DC-088C/XE)
	614 319 0936	CARTON CASE,INNER SLEEVE (DC-088C/SP)
	614 316 2766	CUSHION,FRONT
	614 316 2773	CUSHION,BACK
	614 317 8149	INSTRUCTION MANUAL (DC-X8CT/UK & DC-X8CM/UK)
	614 317 9177	INSTRUCTION MANUAL (DC-088C/XE& DC-088C/SP)
	614 317 9184	INSTRUCTION MANUAL GREEK (DC-088C/XE)
	614 245 8587	NOTICE,AC CORD (DC-X8CT/UK & DC-X8CM/UK)
	645 047 3050	POLY SHEET-0650X0450*NC,SET (DC-X8CT/UK & DC-X8CM/UK & DC-088C/SP)
	645 047 3067	POLY SHEET-0650X0450*NC,SET (DC-088C/XE)
	614 316 7150	ASSY,BOX,SPEAKER (DC-X8CT/UK & DC-X8CM/UK)
	614 316 7730	ASSY,BOX,SPEAKER (DC-088C/XE& DC-088C/SP)
	614 316 7167	ASSY,GRILLE (DC-X8CT/UK & DC-X8CM/UK)
	614 319 2817	ASSY,GRILLE (DC-088C/XE& DC-088C/SP)
	645 005 1227	ASSY,ANTENA,LOOP
	614 229 4635	ANT,FM ANT
or	614 308 5515	ANT,FM ANT
	645 045 7425	REMOCON,RB-X8RD
	645 040 9943	BATTERY COVER,SERVICE PART
	645 047 1469	CABLE,SYSTEM 19P,SYSTEM CABLE (DC-X8CT/UK)
	645 047 7058	ASSY,CABLE,SYSTEM,19P (DC-X8CM/UK)
	645 043 9421	CABLE,OPTICAL (DC-X8CM/UK)
	645 047 6594	ASSY,CABLE,SYSTEM,19P (DC-088C/XE)
	645 048 5992	ASSY,CABLE,SYSTEM,19P (DC-088C/SP)

CABINET & CHASSIS

REF.NO.	PART NO.	DESCRIPTION
1	614 316 5378	ASSY,CABINET,FRONT (DC-X8CT/UK & DC-X8CM/UK)
1	614 317 9153	ASSY,CABINET,FRONT (DC-088C/XE)
1	614 319 0578	ASSY,CABINET,FRONT (DC-088C/SP)
2	614 316 2490	KNOB,ROTARY,VOL,VOLUME
3	614 316 2506	KNOB,ROTARY,JOG,JOG
4	614 302 0530	DEC,WINDOW LED,STANDBY
5	614 316 2025	BUTTON,STANDBY(DC-X8CT/UK, DC-X8CM/UK & DC-088C/XE)
5	614 319 0646	BUTTON,STANDBY (DC-088C/SP)
6	614 316 2049	BUTTON,MEMORY,BAND
7	614 316 2032	BUTTON,BAND,BAND
8	614 316 2308	DEC,WINDOW,VOL,VOL LIGHTING
9	614 316 3350	REFLECTOR,LED,VOL LIGHTING
10	614 316 2056	BUTTON,JOG MODE(DC-X8CT/UK, DC-X8CM/UK & DC-088C/XE)
10	614 319 0653	BUTTON,JOG MODE(DC-X8CT/UK, (DC-088C/SP)
11	614 317 7401	ASSY,CABINET,BENDING, AFTER BENDING
12	614 316 2476	HOLDER,HEAT SINK,LEFT,HEATSINK
13	614 316 2483	HOLDER,HEAT SINK,RIGHT,HEATSINK
14	614 316 5439	ASSY,HEAT SINK,POWER IC, TR
15	614 291 6568	MOUNTING,PWB,FOR-REG
16	614 316 1264	ASSY,CABINET,BOTTOM
17	614 129 1901	FIXER,AC CORD
or	614 284 1884	FIXER,AC CORD
18	614 310 3837	MOUNTING,FAN
19	614 316 2537	PANEL,REAR
20	614 317 9160	REFLECTOR,SHEET,VOL LIGHTING
21	614 317 4721	SHIELD,FRONT

FIXING PARTS

REF.NO.	PART NO.	DESCRIPTION
Y01	411 021 6405	SCR S-TPG BIN 3X8, FRONT-BOTTOM FIX
Y02	411 165 3803	SCR S-TPG BIN 2.3X10, FRONT PWB FIX
Y03	411 098 4205	SCR S-TPG BIN 3X8,CABINET
Y04	411 021 6405	SCR S-TPG BIN 3X8, HOLDER HS-BOTTOM
Y05	411 021 6405	SCR S-TPG BIN 3X8, HOLDER HS-HEATSINK
Y06	411 021 6405	SCR S-TPG BIN 3X8, HEATSINK-POSISTOR
Y07	411 021 6405	SCR S-TPG BIN 3X8,TUNER PWB
Y08	411 021 6405	SCR S-TPG BIN 3X8,HOLDER HS-PWB +MAIN PWB
Y09	411 020 9506	SCR S-TPG BRZ+FLG 3X16, HEATSINK-POWER IC

PARTS LIST

REF.NO.	PART NO.	DESCRIPTION
Y10	411 021 6405	SCR S-TPG BIN 3X8,SUB TRANS PWB
Y11	614 130 0382	LUG,AC CORD
Y12	411 001 3905	SCR S-TPG BIN 4X6,TRANS
Y13	411 021 6405	SCR S-TPG BIN 3X8,HP- PWB
Y14	411 021 3701	SCR S-TPG BIN 3X10,BOTTOM-REAR
Y15	411 021 3701	SCR S-TPG BIN 3X10, REAR-ELECT PARTS
Y16	411 021 3701	SCR S-TPG BIN 3X10,MOUNTI FAN
Y17	411 021 6405	SCR S-TPG BIN 3X8,HEATSINK-REG
Y18	411 021 6405	SCR S-TPG BIN 3X8,HOLDER HS-PWB
Y19	411 021 6405	SCR S-TPG BIN 3X8,SHIELD FRONT

ELECTRICAL PARTS

REF.NO.	PART NO.	DESCRIPTION
51	614 316 7457	ASSY,WIRE
52	614 316 7464	ASSY,WIRE
53	645 048 2670	FLEXIBLE FLAT CABLE
54	614 309 9482	ASSY,WIRE,MAIN-SUBPT
55	614 309 4142	ASSY,WIRE,MAIN-HP
56	614 316 7488	ASSY,WIRE,PREAMP-HP
57	⚠ 423 028 8108	FUSE 250V 0.8A,PRIMARY-FUSE
58	614 316 7471	ASSY,WIRE,PT2-PREAMP
59	⚠ 645 036 9797	CORD,POWER-1.6MK (DC-X8CT/UK & DC-X8CM/UK)
or	⚠ 645 036 9803	CORD,POWER-1.6MK (DC-X8CT/UK & DC-X8CM/UK)
59	⚠ 645 016 9939	CORD,POWER-1.74MK (DC-088C/XE&DC-088C/SP)
or	⚠ 614 255 2513	CORD,POWER (DC-088C/XE&DC-088C/SP)
60	645 041 8891	MOTOR,FAN DC 0.84W, FAN - L=100MM
61	645 031 7637	CORE,FERRITE,AC-EMC
or	645 013 6498	CORE,FERRITE,AC-EMC
62	645 037 3060	CORE,CLAMP,LINE-NOISE
63	⚠ 645 045 0723	TRANS,POWER,EI66X45
64	⚠ 614 318 4072	PWB,HS,HOLDER HEATSINK

FRONT P.W.BOARD ASSY

REF.NO.	PART NO.	DESCRIPTION
71	614 315 9049	ASSY,PWB,FRONT (Only Initial)
BR601	614 305 2241	HOLDER,FL,FL_MOUNT
C6001	403 304 4802	DL-ELECT 0.047F Z 5.5V
or	403 262 8607	DL-ELECT 0.047F Z 5.5V
or	403 369 2805	DL-ELECT 0.047F Z 5.5V
CN601	645 012 5539	SOCKET,FPC 20P
CN602	614 035 4959	SOCKET,DIP 6P,FRONT-TU
or	645 012 7823	SOCKET,DIP 6P,FRONT-TU
CN603	614 035 4928	SOCKET,DIP 3P,FRONT-PT2
or	645 012 7793	SOCKET,DIP 3P,FRONT-PT2
CN612	614 316 7464	ASSY,WIRE
CN613	614 316 7457	ASSY,WIRE
D6001	407 097 8009	DIODE MPG06G
D6002	407 012 4406	DIODE 1SS133
D6004	408 032 5404	LED SLP-9118C-51H-S-T1, STANDBY_LED
D6005	408 044 9100	LED HLMP-EL31-SVK00, VOL_RING_LED
D6006	408 044 9100	LED HLMP-EL31-SVK00, VOL_RING_LED
DS601	407 217 1101	PHOTO DIODE SPS-442-1G,IR
FL601	645 040 1794	FLOURESCENT TUBE,FL
IC601	410 409 8703	IC M38B57MCH D269FP, MICRO-CONTROLER
L6001	645 001 4550	INDUCTOR,10U K
or	645 031 7835	INDUCTOR,10U K
Q6001	405 146 2107	TR KTC3875-Y
or	405 146 2206	TR KTC3875-GR
or	405 014 4509	TR 2SC2412K-R
or	405 011 1006	TR 2SC1623-L6
Q6003	405 146 1704	TR KTA1504-Y
or	405 146 9700	TR KTA1504-GR
or	405 134 5905	TR 2SA1037AK-R
or	405 002 0308	TR 2SA1037K-R
or	405 005 5508	TR 2SA812-M6
Q6004	405 146 2107	TR KTC3875-Y
or	405 146 2206	TR KTC3875-GR
or	405 014 4509	TR 2SC2412K-R
or	405 011 1006	TR 2SC1623-L6
Q6005	405 146 2107	TR KTC3875-Y
or	405 146 2206	TR KTC3875-GR
or	405 014 4509	TR 2SC2412K-R
or	405 011 1006	TR 2SC1623-L6
Q6006	405 146 2107	TR KTC3875-Y
or	405 146 2206	TR KTC3875-GR
or	405 014 4509	TR 2SC2412K-R
or	405 011 1006	TR 2SC1623-L6
Q6007	405 146 1605	TR KRC102S
or	405 132 3101	TR DTC114EKA
S6001	614 215 9828	SWITCH,TACT,RESETSW
S6101	645 033 7673	SWITCH,ROTARY(ENCODER),VOLUME
S6102	645 033 7680	SWITCH,ROTARY(ENCODER),MULTIJOG
S6201	614 240 1002	SWITCH,TACT
or	645 006 5958	SWITCH,PUSH 1P-1T
or	614 220 5471	SWITCH,TACT
S6202	614 240 1002	SWITCH,TACT
or	645 006 5958	SWITCH,PUSH 1P-1T
or	614 220 5471	SWITCH,TACT
S6203	614 240 1002	SWITCH,TACT
or	645 006 5958	SWITCH,PUSH 1P-1T
or	614 220 5471	SWITCH,TACT
S6204	614 240 1002	SWITCH,TACT
or	645 006 5958	SWITCH,PUSH 1P-1T
or	614 220 5471	SWITCH,TACT
S6205	614 240 1002	SWITCH,TACT
or	645 006 5958	SWITCH,PUSH 1P-1T
or	614 220 5471	SWITCH,TACT
S6207	614 240 1002	SWITCH,TACT
or	645 006 5958	SWITCH,PUSH 1P-1T
or	614 220 5471	SWITCH,TACT
S6209	614 240 1002	SWITCH,TACT
or	645 006 5958	SWITCH,PUSH 1P-1T
or	614 220 5471	SWITCH,TACT
S6301	614 240 1002	SWITCH,TACT
or	645 006 5958	SWITCH,PUSH 1P-1T
or	614 220 5471	SWITCH,TACT
S6302	614 240 1002	SWITCH,TACT
or	645 006 5958	SWITCH,PUSH 1P-1T
or	614 220 5471	SWITCH,TACT
S6303	614 240 1002	SWITCH,TACT
or	645 006 5958	SWITCH,PUSH 1P-1T
or	614 220 5471	SWITCH,TACT
S6304	614 240 1002	SWITCH,TACT
or	645 006 5958	SWITCH,PUSH 1P-1T
or	614 220 5471	SWITCH,TACT
S6305	614 240 1002	SWITCH,TACT
or	645 006 5958	SWITCH,PUSH 1P-1T
or	614 220 5471	SWITCH,TACT
TA601	614 112 1451	DOUBLE FACE,FL_MOUNT
X6001	645 032 1627	OSC,CRYSTAL 32.768KHZ,XTAL
X6002	614 215 5561	RESONATOR,CERAM
or	645 013 7532	OSC,CERAMIC 4.19MHZ

PARTS LIST

SPEAKER P.W.BOARD ASSY

REF.NO.	PART NO.	DESCRIPTION
72	614 315 9810	ASSY,PWB,SPEAKER (Only Initial)
C0050	403 059 5505	POLYESTER 0.022U J 50V
C0051	403 059 5505	POLYESTER 0.022U J 50V
CN410	645 033 3095	TERMINAL
CN411	645 033 3057	JACK,RCA
CN412	614 020 1239	SOCKET,4P
CN413	614 316 7495	ASSY,WIRE,SP-MAIN
L0050	645 006 9864	INDUCTOR,80U
or	614 212 3171	INDUCTOR,FERITE

TUNER P.W.BOARD ASSY

REF.NO.	PART NO.	DESCRIPTION
73	614 316 3053	ASSY,PWB,TUNER (Only Initial)
B2101	645 006 3602	INDUCTOR,1.1UH
C2457	403 259 0508	NP-ELECT 1U M 50V
CN201	614 255 5750	TERMINAL
or	645 032 6394	TERMINAL
CN241	645 040 1152	SOCKET,5P
CN242	645 006 0939	PLUG,6P
or	645 009 6464	PLUG,6P
or	614 310 2625	PLUG,6P
D2151	407 012 4406	DIODE 1SS133
D2301	407 063 9108	ZENER DIODE MTZJ6.8B
D2451	407 012 4406	DIODE 1SS133
D2452	407 153 7502	ZENER DIODE GZS3.0B
D2453	407 012 4406	DIODE 1SS133
D2454	407 012 4406	DIODE 1SS133
D2466	407 012 4406	DIODE 1SS133
D2467	407 012 4406	DIODE 1SS133
IC231	409 474 3201	IC LA1844ML
IC241	409 439 4502	IC LC72121M-D
IC251	409 447 3900	IC LC72722
L2151	645 023 0127	TUNER
L2451	645 001 4581	INDUCTOR,100U K
or	645 031 7842	INDUCTOR,100U K
L2501	645 001 4581	INDUCTOR,100U K
or	645 031 7842	INDUCTOR,100U K
L2502	645 001 4581	INDUCTOR,100U K
or	645 031 7842	INDUCTOR,100U K
L2503	⚠ 645 004 0511	INDUCTOR,270U J
Q2140	405 143 8706	TR KTC3199-GR
or	405 017 9600	TR 2SC3330-T
or	405 017 9709	TR 2SC3330-U
or	405 019 3705	TR 2SC536-G-AUD-SPA
or	405 011 8500	TR 2SC1740S-R
or	405 011 8609	TR 2SC1740S-S
or	405 020 7402	TR 2SC945A-P
or	405 020 7204	TR 2SC945A-K
Q2201	405 151 4202	TR KTC3193-O
or	405 151 4103	TR KTC3193-Y
or	405 016 0806	TR 2SC2839-E
Q2310	405 143 8706	TR KTC3199-GR
or	405 017 9600	TR 2SC3330-T
or	405 017 9709	TR 2SC3330-U
or	405 019 3705	TR 2SC536-G-AUD-SPA
or	405 011 8500	TR 2SC1740S-R
or	405 011 8609	TR 2SC1740S-S
or	405 020 7402	TR 2SC945A-P
or	405 020 7204	TR 2SC945A-K
Q2451	405 151 5209	TR KRA107M
or	405 000 0904	TR DTA114YS
or	405 078 2404	TR BN1A4P
or	405 036 3702	TR 2SA1564
Q2502	405 151 5209	TR KRA107M
or	405 000 0904	TR DTA114YS
or	405 078 2404	TR BN1A4P
or	405 036 3702	TR 2SA1564
Q2701	405 143 8706	TR KTC3199-GR
or	405 017 9600	TR 2SC3330-T
or	405 017 9709	TR 2SC3330-U
or	405 019 3705	TR 2SC536-G-AUD-SPA
or	405 011 8500	TR 2SC1740S-R
or	405 011 8609	TR 2SC1740S-S
or	405 020 7402	TR 2SC945A-P
or	405 020 7204	TR 2SC945A-K
Q2801	405 143 8706	TR KTC3199-GR
or	405 017 9600	TR 2SC3330-T
or	405 017 9709	TR 2SC3330-U
or	405 019 3705	TR 2SC536-G-AUD-SPA
or	405 011 8500	TR 2SC1740S-R
or	405 011 8609	TR 2SC1740S-S
or	405 020 7402	TR 2SC945A-P
or	405 020 7204	TR 2SC945A-K
Q2901	405 143 8706	TR KTC3199-GR
or	405 017 9600	TR 2SC3330-T
or	405 017 9709	TR 2SC3330-U
or	405 011 8500	TR 2SC1740S-R
or	405 011 8609	TR 2SC1740S-S
R2101	⚠ 401 012 4404	CARBON 100 JA 1/4W
R2301	⚠ 01 017 0708	CARBON 270 JA 1/4W
R2311	⚠ 401 017 0708	CARBON 270 JA 1/4W
U2101	645 033 5327	TUNER,FM
X2451	645 023 4965	OSC,CRYSTAL 7.2MHZ
X2501	645 035 8326	OSC,CRYSTAL 4.332MHZ
XF221	614 240 2917	FILTER,CERAM
or	645 010 0079	CERAMIC FILTER 10.70MHZ
or	614 254 3214	FILTER
XF222	614 240 2917	FILTER,CERAM
or	645 010 0079	CERAMIC FILTER 10.70MHZ
or	614 254 3214	FILTER
XF231	614 246 0849	FILTER
XF233	645 039 9923	TRANS,IF 10.7MHZ

PRE AMPLIFIER P.W.BOARD ASSY

REF.NO.	PART NO.	DESCRIPTION
74	614 315 9827	ASSY,PWB,PREAMP (Only Initial)
C4517	403 184 9805	MT-POLYEST 0.22U J 50V
or	403 067 6709	MT-COMPO 0.22U J 50V
C4518	403 184 9805	MT-POLYEST 0.22U J 50V
or	403 067 6709	MT-COMPO 0.22U J 50V
C4617	403 184 9805	MT-POLYEST 0.22U J 50V
or	403 067 6709	MT-COMPO 0.22U J 50V
C4618	403 184 9805	MT-POLYEST 0.22U J 50V
or	403 067 6709	MT-COMPO 0.22U J 50V
CN420	614 316 7488	ASSY,WIRE,PREAMP-HP
CN450	645 045 9511	SOCKET,SYSTEM 19P
CN451	645 040 1145	PLUG,5P
CN452	645 012 5249	SOCKET,FPC 20P
CN453	645 005 8363	PLUG,9P
CN454	645 026 8977	SOCKET,12P
CN455	614 035 4935	SOCKET,DIP 4P
CN457	614 310 2441	PLUG,3P
or	645 005 7373	PLUG,3P
D4290	407 127 3806	ZENER DIODE MTZJ3.3B
D4291	407 012 4406	DIODE 1SS133
D4292	407 012 4406	DIODE 1SS133
IC450	409 474 6103	IC LC75342M
IC451	409 426 1804	IC KIA4558S
IC452	409 467 0101	IC LA2615
LG420	645 023 8987	FIXER
Q4260	405 141 3208	TR KTC3198-Y
or	405 143 8706	TR KTC3199-GR
or	405 011 8609	TR 2SC1740S-S
or	405 011 8500	TR 2SC1740S-R

PARTS LIST

REF.NO.	PART NO.	DESCRIPTION
Q4261	405 141 3208	TR KTC3198-Y
or	405 143 8706	TR KTC3199-GR
or	405 011 8609	TR 2SC1740S-S
or	405 011 8500	TR 2SC1740S-R
Q4262	405 143 6504	TR KTA1267-GR
or	405 004 4601	TR 2SA608-F-SPA
or	405 004 5103	TR 2SA608-G-SPA
or	405 006 1806	TR 2SA933S-R
or	405 006 1905	TR 2SA933S-S
Q4290	405 143 6504	TR KTA1267-GR
or	405 004 4601	TR 2SA608-F-SPA
or	405 004 5103	TR 2SA608-G-SPA
or	405 006 1806	TR 2SA933S-R
or	405 006 1905	TR 2SA933S-S
Q4291	405 143 6504	TR KTA1267-GR
or	405 004 4601	TR 2SA608-F-SPA
or	405 004 5103	TR 2SA608-G-SPA
or	405 006 1806	TR 2SA933S-R
or	405 006 1905	TR 2SA933S-S
Q4550	405 073 6407	TR 2SK772-E
or	405 073 6506	TR 2SK772-F
Q4551	405 141 3208	TR KTC3198-Y
or	405 143 8706	TR KTC3199-GR
or	405 011 8609	TR 2SC1740S-S
or	405 011 8500	TR 2SC1740S-R
Q4650	405 073 6407	TR 2SK772-E
or	405 073 6506	TR 2SK772-F
Q4651	405 141 3208	TR KTC3198-Y
or	405 143 8706	TR KTC3199-GR
or	405 011 8609	TR 2SC1740S-S
or	405 011 8500	TR 2SC1740S-R
SH401	614 317 4714	SHIELD,SYSTEM CONNECTOR

MAIN P.W.BOARD ASSY

REF.NO.	PART NO.	DESCRIPTION
75	614 315 9803	ASSY,PWB,MAIN (Only Initial)
B0001	645 037 9185	INDUCTOR,50 OHM
or	645 006 3602	INDUCTOR,1.1UH
C4706	403 057 2407	POLYESTER 0.1U J 50V
C4707	403 057 2407	POLYESTER 0.1U J 50V
C4806	403 057 2407	POLYESTER 0.1U J 50V
C4807	403 057 2407	POLYESTER 0.1U J 50V
C4905	403 329 6201	ELECT 2200U M 35V
C4906	403 329 6201	ELECT 2200U M 35V
C4950	403 329 6003	ELECT 4700U M 25V
C4951	403 329 3309	ELECT 2200U M 25V
CN470	645 012 6369	JACK,RCA-2
CN490	614 020 1246	SOCKET,5P
CN491	614 310 2755	PLUG,4P
or	645 004 2904	PLUG,4P
CN492	614 310 2731	PLUG,2P
or	645 004 2881	PLUG,2P
CN493	645 026 8960	PLUG,12P
CN494	645 005 8585	SOCKET,9P
CN495	614 035 4942	SOCKET,DIP 5P
CN497	614 035 4928	SOCKET,DIP 3P
D4020	407 012 4406	DIODE 1SS133
D4021	407 012 4406	DIODE 1SS133
D4030	407 012 4406	DIODE 1SS133
D4050	407 012 4406	DIODE 1SS133
D4051	407 012 4406	DIODE 1SS133
D4080	407 012 4406	DIODE 1SS133
D4900	⚠ 407 196 5800	DIODE 1N5402BD82
D4901	⚠ 407 196 5800	DIODE 1N5402BD82
D4902	⚠ 407 196 5800	DIODE 1N5402BD82
D4903	⚠ 407 196 5800	DIODE 1N5402BD82
D4910	407 099 6805	ZENER DIODE MTZJ13B
D4920	407 099 6805	ZENER DIODE MTZJ13B
D4930	407 099 6805	ZENER DIODE MTZJ13B
D4940	⚠ 407 097 8009	DIODE MPG06G
D4941	⚠ 407 097 8009	DIODE MPG06G
D4942	407 099 5402	ZENER DIODE MTZJ6.2B
IC470	⚠ 409 465 4804	IC STK402-030
L0001	645 001 4550	INDUCTOR,10U K
or	645 031 7835	INDUCTOR,10U K
L0002	645 001 4550	INDUCTOR,10U K
or	645 031 7835	INDUCTOR,10U K
L4700	645 018 0279	COIL,AIR
or	614 196 9763	V.H.F COIL
L4800	645 018 0279	COIL,AIR
or	614 196 9763	V.H.F COIL
LG470	645 023 8987	FIXER
PO404	408 017 0707	TH PTH9M04BC471TS2F333
Q4000	405 141 3208	TR KTC3198-Y
or	405 143 8706	TR KTC3199-GR
or	405 011 8609	TR 2SC1740S-S
or	405 011 8500	TR 2SC1740S-R
Q4001	405 143 6504	TR KTA1267-GR
or	405 004 4601	TR 2SA608-F-SPA
or	405 004 5103	TR 2SA608-G-SPA
or	405 006 1806	TR 2SA933S-R
or	405 006 1905	TR 2SA933S-S
Q4002	405 141 3208	TR KTC3198-Y
or	405 143 8706	TR KTC3199-GR
or	405 011 8609	TR 2SC1740S-S
or	405 011 8500	TR 2SC1740S-R
Q4010	405 141 3208	TR KTC3198-Y
or	405 143 8706	TR KTC3199-GR
or	405 011 8609	TR 2SC1740S-S
or	405 011 8500	TR 2SC1740S-R
Q4011	405 141 3208	TR KTC3198-Y
or	405 143 8706	TR KTC3199-GR
or	405 011 8609	TR 2SC1740S-S
or	405 011 8500	TR 2SC1740S-R
Q4030	405 141 3208	TR KTC3198-Y
or	405 143 8706	TR KTC3199-GR
or	405 011 8609	TR 2SC1740S-S
or	405 011 8500	TR 2SC1740S-R
Q4035	405 141 3208	TR KTC3198-Y
or	405 143 8706	TR KTC3199-GR
or	405 011 8609	TR 2SC1740S-S
or	405 011 8500	TR 2SC1740S-R
Q4050	405 141 3208	TR KTC3198-Y
or	405 143 8706	TR KTC3199-GR
or	405 011 8609	TR 2SC1740S-S
or	405 011 8500	TR 2SC1740S-R
Q4060	405 143 6504	TR KTA1267-GR
or	405 004 4601	TR 2SA608-F-SPA
or	405 004 5103	TR 2SA608-G-SPA
or	405 006 1806	TR 2SA933S-R
or	405 006 1905	TR 2SA933S-S
Q4080	405 141 3208	TR KTC3198-Y
or	405 143 8706	TR KTC3199-GR
or	405 011 8609	TR 2SC1740S-S
or	405 011 8500	TR 2SC1740S-R
Q4081	405 141 3208	TR KTC3198-Y
or	405 143 8706	TR KTC3199-GR
or	405 011 8609	TR 2SC1740S-S
or	405 011 8500	TR 2SC1740S-R
Q4082	⚠ 405 141 1402	TR KTD863-GR
or	⚠ 405 023 5009	TR 2SD400-E-MP
or	⚠ 405 023 5306	TR 2SD400-F-MP
Q4700	405 151 4400	TR KTD1303
or	405 021 0204	TR 2SD1012-F-SPA

PARTS LIST

REF.NO.		PART NO.	DESCRIPTION
or		405 021 0600	TR 2SD1012-G-SPA
or		405 033 6706	TR 2SD1468S-R
or		405 033 6805	TR 2SD1468S-S
Q4800		405 151 4400	TR KTD1303
or		405 021 0204	TR 2SD1012-F-SPA
or		405 021 0600	TR 2SD1012-G-SPA
or		405 033 6706	TR 2SD1468S-R
or		405 033 6805	TR 2SD1468S-S
Q4900		405 141 3208	TR KTC3198-Y
or		405 143 8706	TR KTC3199-GR
or		405 011 8609	TR 2SC1740S-S
or		405 011 8500	TR 2SC1740S-R
Q4910	⚠	405 158 2102	TR KTC2026-Y
or	⚠	405 138 6403	TR KTD2058Y
or	⚠	405 095 1602	TR 2SD2061-E
or	⚠	405 095 1701	TR 2SD2061-F
Q4911		405 141 3208	TR KTC3198-Y
or		405 143 8706	TR KTC3199-GR
or		405 011 8609	TR 2SC1740S-S
or		405 011 8500	TR 2SC1740S-R
Q4912		405 141 3208	TR KTC3198-Y
or		405 143 8706	TR KTC3199-GR
or		405 011 8609	TR 2SC1740S-S
or		405 011 8500	TR 2SC1740S-R
Q4920	⚠	405 158 2102	TR KTC2026-Y
or	⚠	405 138 6403	TR KTD2058Y
or	⚠	405 095 1602	TR 2SD2061-E
or	⚠	405 095 1701	TR 2SD2061-F
Q4921		405 141 3208	TR KTC3198-Y
or		405 143 8706	TR KTC3199-GR
or		405 011 8609	TR 2SC1740S-S
or		405 011 8500	TR 2SC1740S-R
Q4922		405 141 3208	TR KTC3198-Y
or		405 143 8706	TR KTC3199-GR
or		405 011 8609	TR 2SC1740S-S
or		405 011 8500	TR 2SC1740S-R
Q4930	⚠	405 141 3604	TR KTA1273-Y
or	⚠	405 009 5207	TR 2SB927-S
or	⚠	405 009 5306	TR 2SB927-T
Q4931		405 143 6504	TR KTA1267-GR
or		405 004 4601	TR 2SA608-F-SPA
or		405 004 5103	TR 2SA608-G-SPA
or		405 006 1806	TR 2SA933S-R
or		405 006 1905	TR 2SA933S-S
Q4940	⚠	405 095 1602	TR 2SD2061-E
or	⚠	405 095 1701	TR 2SD2061-F
or	⚠	405 138 6403	TR KTD2058Y
or	⚠	405 158 2102	TR KTC2026-Y
R4000	⚠	614 242 0126	RESISTOR 0.22 K- 3W
R4706	⚠	402 082 1300	RESISTOR 4.7 J- 1W
R4707	⚠	402 082 1300	RESISTOR 4.7 J- 1W
R4710	⚠	402 082 1201	RESISTOR 330 J- 1W
R4806	⚠	402 082 1300	RESISTOR 4.7 J- 1W
R4807	⚠	402 082 1300	RESISTOR 4.7 J- 1W
R4810	⚠	402 082 1201	RESISTOR 330 J- 1W
R4902	⚠	402 081 1103	FUSIBLE RES 100 JA 1/4W
R4903	⚠	402 081 1103	FUSIBLE RES 100 JA 1/4W
R4910	⚠	402 082 5209	RESISTOR 1 J- 1/2W
R4920	⚠	402 082 5209	RESISTOR 1 J- 1/2W
R4930	⚠	402 081 1004	FUSIBLE RES 10 JA 1/4W
R4940	⚠	402 085 2403	RESISTOR 10 J- 2W
R4941	⚠	402 085 2403	RESISTOR 10 J- 2W
RY405		614 224 4531	RELAY
or		645 035 6582	RELAY

SUB POWER TRANSFORMER P.W.BOARD ASSY

REF.NO.		PART NO.	DESCRIPTION
76		614 315 9858	ASSY,PWB,SUB POWER TRANSFORMER (Only Initial)
C6900	⚠	403 349 3303	CERAMIC 0.01U M 250V
or	⚠	403 366 7803	CERAMIC 0.01U M 250V
CN692		614 310 2441	PLUG,3P
or		645 005 7373	PLUG,3P
D4400	⚠	407 097 8009	DIODE MPG06G
D4401	⚠	407 097 8009	DIODE MPG06G
D4402	⚠	407 097 8009	DIODE MPG06G
D4403	⚠	407 097 8009	DIODE MPG06G
D4410		407 099 5402	ZENER DIODE MTZJ6.2B
D4411		407 012 4406	DIODE 1SS133
FPC01		645 006 4760	HOLDER,FUSE
or		645 031 7903	HOLDER,FUSE
FPC02		645 006 4760	HOLDER,FUSE
or		645 031 7903	HOLDER,FUSE
L6900	⚠	645 038 7364	INDUCTOR,70U
PT690	⚠	645 041 0277	TRANS,POWER
Q4410	⚠	405 141 1402	TR KTD863-GR
or	⚠	405 023 5009	TR 2SD400-E-MP
or	⚠	405 023 5306	TR 2SD400-F-MP
Q4411		405 141 3208	TR KTC3198-Y
or		405 143 8706	TR KTC3199-GR
or		405 011 8609	TR 2SC1740S-S
or		405 011 8500	TR 2SC1740S-R
RY441	⚠	645 030 5597	RELAY
or	⚠	645 035 6575	RELAY
WR690		614 017 8203	TERMINAL BOARD
WR691		614 017 8203	TERMINAL BOARD

POWER TRANSFORMER, PRIMARY P.W.BOARD ASSY

REF.NO.	PART NO.	DESCRIPTION
77	614 315 9834	ASSY,PWB, POWER TRANSFORMER, PRIMARY (Only Initial)

POWER TRANSFORMER, SECONDARY P.W.BOARD ASSY

REF.NO.		PART NO.	DESCRIPTION
78		614 315 9841	ASSY,PWB, POWER TRANSFORMER, SECONDARY (Only Initial)
C4305		404 079 6008	ELECT 1U M 50V
CN430		614 020 1246	SOCKET,5P
CN431		614 310 2441	PLUG,3P
or		645 005 7373	PLUG,3P
CN432		614 035 4928	SOCKET,DIP 3P
D4300		407 012 4406	DIODE 1SS133
D4301		407 012 4406	DIODE 1SS133
D4302		407 012 4406	DIODE 1SS133
D4303		407 012 4406	DIODE 1SS133
D4304		407 099 9905	ZENER DIODE MTZJ33B
D4305		407 099 5402	ZENER DIODE MTZJ6.2B
D4350	⚠	407 196 5800	DIODE 1N5402BD82
D4351	⚠	407 196 5800	DIODE 1N5402BD82
D4352	⚠	407 210 7902	DIODE RL203-BD81
or	⚠	407 107 6001	DIODE RL203-BD80
D4353	⚠	407 210 7902	DIODE RL203-BD81
or	⚠	407 107 6001	DIODE RL203-BD80
PR430	⚠	645 042 2737	PROTECTOR,7A 125V
or	⚠	645 025 5137	PROTECTOR,7A 125V
PR431	⚠	645 042 2737	PROTECTOR,7A 125V
or	⚠	645 025 5137	PROTECTOR,7A 125V
PR432	⚠	645 027 4169	PROTECTOR,0.125A 125V
PR433	⚠	645 042 2553	PROTECTOR,0.63A 125V
or	⚠	645 014 2468	PROTECTOR,0.63A 125V

PARTS LIST

REF.NO.	PART NO.	DESCRIPTION
PR434	⚠ 645 042 2553	PROTECTOR,0.63A 125V
or	⚠ 645 014 2468	PROTECTOR,0.63A 125V
Q4300	⚠ 405 141 3604	TR KTA1273-Y
or	⚠ 405 009 5207	TR 2SB927-S
or	⚠ 405 009 5306	TR 2SB927-T

HEADPHONE P.W.BOARD ASSY

REF.NO.	PART NO.	DESCRIPTION
79	614 316 5873	ASSY,PWB,HEADPHONE (Only Initial)
CN680	645 011 6384	JACK,PHONE D3.6
CN681	645 011 6384	JACK,PHONE D3.6
CN682	614 310 2465	PLUG,5P
or	645 005 9292	PLUG,5P
CN683	614 310 2458	PLUG,4P
or	645 005 8110	PLUG,4P
L0151	645 001 5441	INDUCTOR,2.2U K
or	645 045 9139	INDUCTOR,2.2U K
L0152	645 006 9864	INDUCTOR,80U
or	614 212 3171	INDUCTOR,FERITE
L0153	645 006 9864	INDUCTOR,80U
or	614 212 3171	INDUCTOR,FERITE

REF.NO.	PART NO.	DESCRIPTION
L6800	645 001 4550	INDUCTOR,10U K
or	645 031 7835	INDUCTOR,10U K
L6851	645 001 4550	INDUCTOR,10U K
or	645 031 7835	INDUCTOR,10U K
Q6880	405 151 4400	TR KTD1303
or	405 021 0204	TR 2SD1012-F-SPA
or	405 021 0600	TR 2SD1012-G-SPA
or	405 033 6706	TR 2SD1468S-R
or	405 033 6805	TR 2SD1468S-S
Q6881	405 151 4400	TR KTD1303
or	405 021 0204	TR 2SD1012-F-SPA
or	405 021 0600	TR 2SD1012-G-SPA
or	405 033 6706	TR 2SD1468S-R
or	405 033 6805	TR 2SD1468S-S
Q6882	405 143 6504	TR KTA1267-GR
or	405 004 4601	TR 2SA608-F-SPA
or	405 004 5103	TR 2SA608-G-SPA
or	405 006 1806	TR 2SA933S-R
or	405 006 1905	TR 2SA933S-S

IC BLOCK DIAGRAM & DESCRIPTION

IC601 M38B57MCH-A269FP (8-bit Microcomputer)

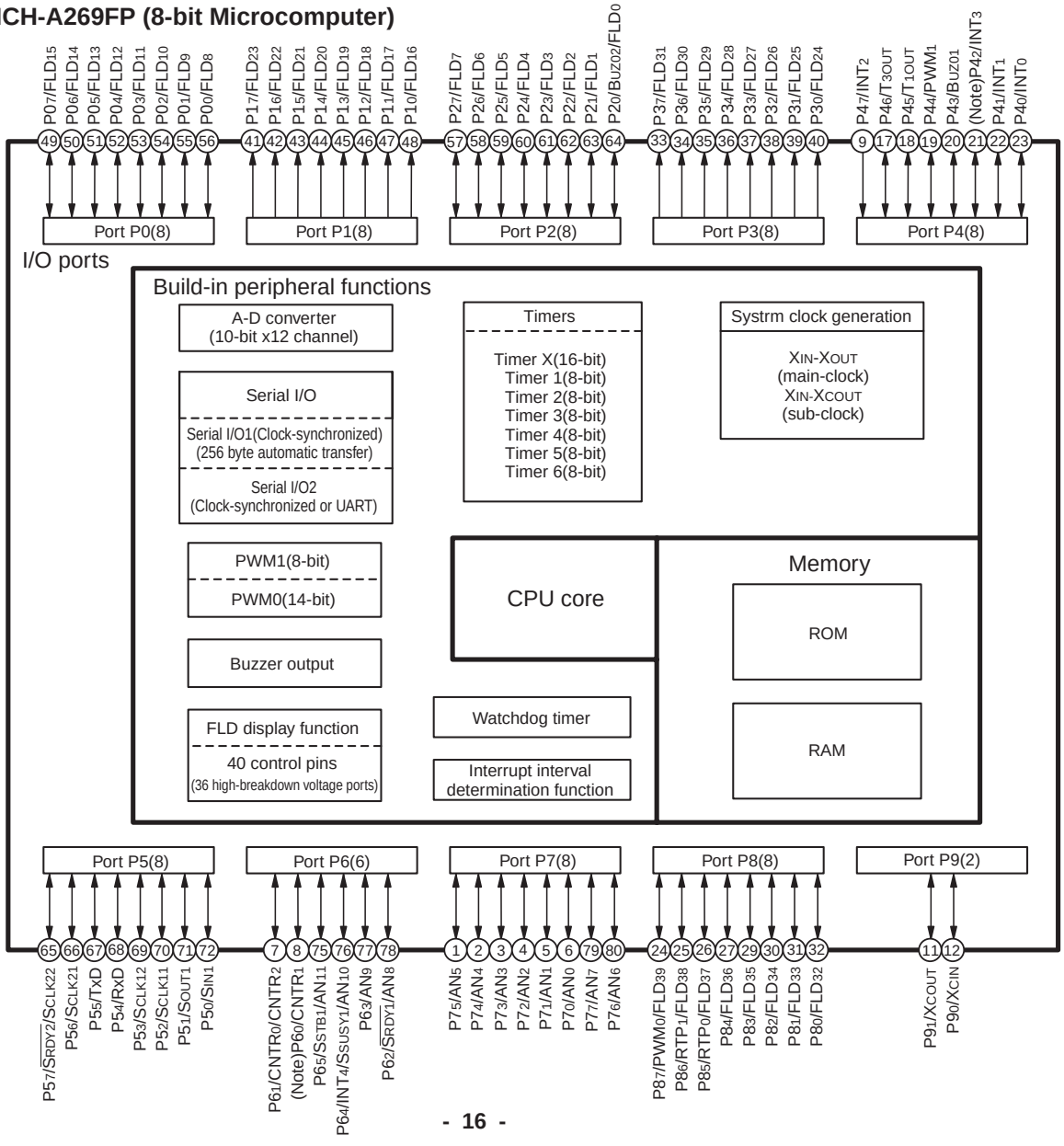

IC BLOCK DIAGRAM & DESCRIPTION

IC601 M38B57MCH-A269FP (8-bit Microcomputer)

No.	Pin Name	I/O	Function
1	P75/AN05	I	Volume
2	P74/AN04	I	Volume
3	P73/AN03	AD	
4	P72/AN02	AD	
5	P71/AN01	I	Protect
6	P70/AN00	O	Function control
7	P61/CNTR0/CNTR2	O	Power control
8	P60/CNTR1	O	Clock shift control output(bc-A=Low)
9	P47/INT2	I	Power failure detection (Power Failure=L)/Micon power check(Down=L)
10	RESET		System reset terminal
11	P91/Xcout		Sub clock oscillating terminal
12	P90/Xcin		Sub clock oscillating terminal
13	Vss		Ground potential terminal
14	Xin		Main clock oscillating ceramic terminal
15	Xout		Main clock oscillating ceramic terminal
16	Vcc		Plus power terminal
17	P46/T3out		Ground control output for micon power check
18	P45/T1out	O	Mute Output(ON=H)
19	P44/PWM1	O	Pull up control (ON=L)
20	P43/Buz01	I	Option Select in
21	P42/INT3	I	Remote control input
22	P41/INT1	I	RDS data input
23	P40/INT0	I/O	Serial synchro input /output
24	P87/PWM0/FLD39	I	TU PLL DO
25	P86/RTP1/FLD38	O	TU PLL /RDS CLK
26	P85/RTP0/FLD37	O	TU PLL /RDS DATA
27	P84/FLD36	O	TU PLL /RDS CE
28	Vee		FL Minus power terminal
29	P83/FLD35	O	FL digit output(Pull Down R) SEL_12/24
30	P82/FLD34	O	FL digit output(Pull Down R) SEL_RDS
31	P81/FLD33	O	FL digit output(Pull Down R) SEL_RDSE
32	P80/FLD32	O	FL digit output(Pull Down R) SEL_10KEY
33	P37/FLD31	O	FL digit output SEL_FUNC
34	P36/FLD30	O	FL digit output SEL_ECO
35	P35/FLD29	O	FL digit output SEL_DPS
36	P34/FLD28	O	FL digit output SEL_DIM
37	P33/FLD27	O	FL digit output SEL_FUNC2
38	P32/FLD26	O	FL digit output SEL_DISP
39	P31/FLD25	O	FL digit output SEL_FUNC3

No.	Pin Name	I/O	Function
40	P30/FLD24	O	FL digit output
41	P17/FLD23	O	FL segment output
42	P16/FLD22	O	FL segment output
43	P15/FLD21	O	FL segment output
44	P14/FLD20	O	FL segment output
45	P13/FLD19	O	FL segment output
46	P12/FLD18	O	FL segment output
47	P11/FLD17	O	FL segment output
48	P10/FLD16	O	FL segment output
49	P07/FLD15	O	FL segment output
50	P06/FLD14	O	FL segment output
51	P05/FLD13	O	FL segment output
52	P04/FLD12	O	FL segment output
53	P03/FLD11	O	FL segment output
54	P02/FLD10	O	FL segment output
55	P01/FLD09	O	FL segment output
56	P00/FLD08	O	FL segment output
57	P27/FLD07	O	FL segment output (Pull Down R)
58	P26/FLD06	O	FL segment output (Pull Down R)
59	P25/FLD05	I	MULTI
60	P24/FLD04	I	MULTI
61	P23/FLD03	I	BASS
62	P22/FLD02	I	BASS
63	P21/FLD01	I	TREBLE
64	P20/Buz02/FLD00	I	TREBLE
65	P57/Srdy2/Sclk22	I/O	Serial chip enable input/output
66	P56/Sclk21	I/O	Serial clock input/output
67	P55/Txd	Out	Serial DATA output
68	P54/Rxd	In	Serial DATA input
69	P53/Sclk12	I	Headphone switch
70	P52/Sclk11	O	Bass control output (ON="H")
71	P51/Sout1	O	Front speaker relay control(H=ON)
72	P50/Sin1	O	Power control(Power ON=H)
73	Avss		A/D ground potential terminal
74	VREF		A/D standard sub potential terminal
75	P65/Sstb1/AN11	O	
76	P64/INT4/Sbusy1/AN10	O	
77	P63/AN09	O	LC75385NE CE
78	P62/AN08	O	3D srround control output
79	P77/AN07	O	3D srround control output
80	P76/AN06	O	NC

IC452 (LA2615 Suround Signal Processor)

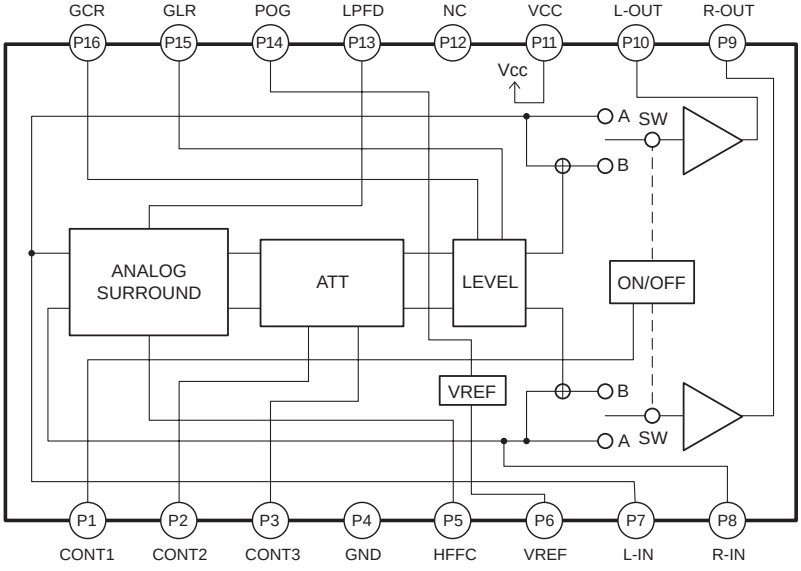

IC BLOCK DIAGRAM & DESCRIPTION

IC231 LA1844ML (Tuner System)

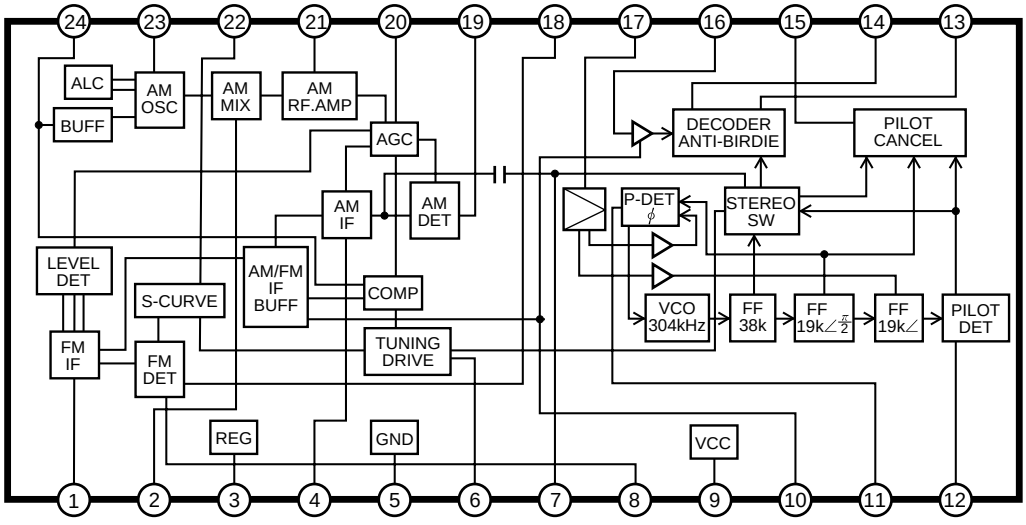

IC241 LC72121M-D (Pll Synthesizer)

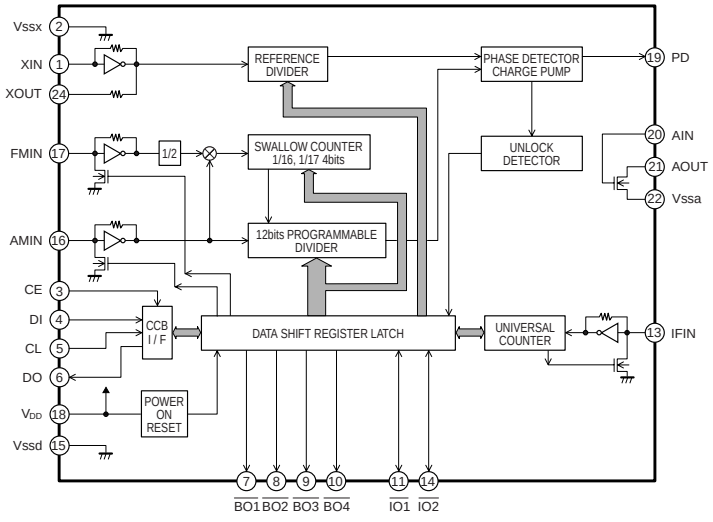

IC251 LC72722 (RDS Signal Processor)

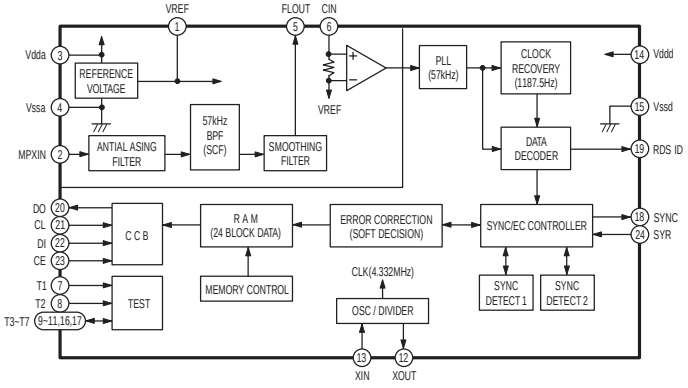

IC450 LC75342M
(Electronically Controllable Electronic Volume)

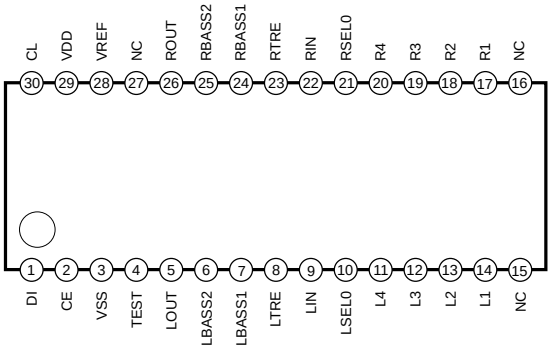

IC451 KIA4558S
(Dual Low Noise Operational Amplifier)

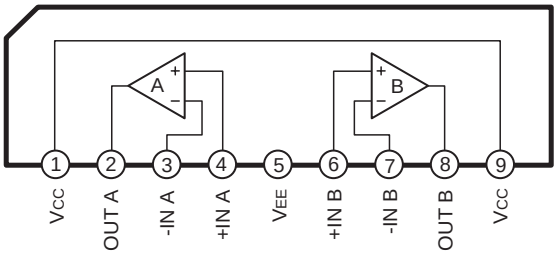

FL DISPLAY DESCRIPTION

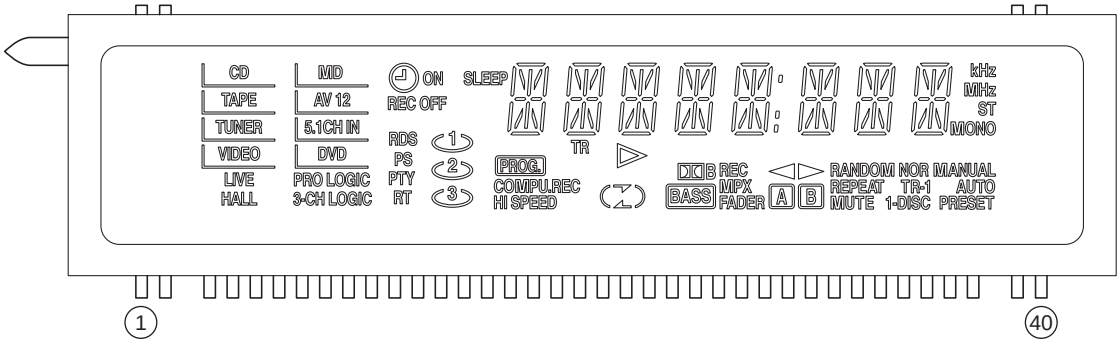

ANODE & GRID ASSIGNMENT

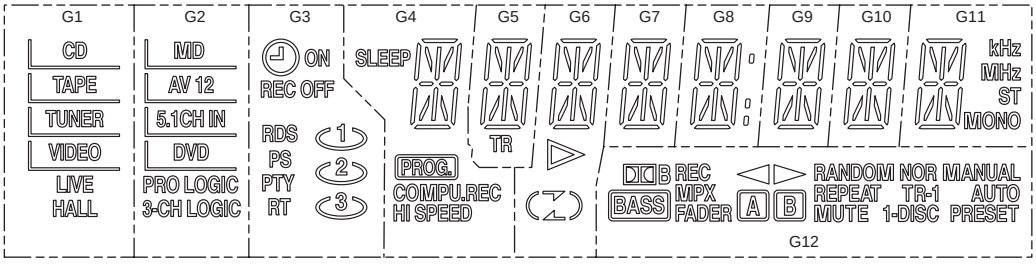

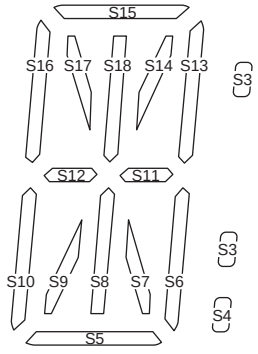

G4~G11

ANODE & GRID ASSIGNMENT

	G1	G2	G3	G4	G5	G6	G7	G8	G9	G10	G11	G12
S1	CD	MD	ON	SLEEP							MONO	PRESET
S2	(CD)	(MD)		HI SPEED							ST	1-DISC
S3	TAPE	(AV1) 2	REC	COMPU.REC				S3			MHz	MUTE
S4				PROG	TR			S4			KHz	FADER
S5				S5	S5	S5	S5	S5	S5	S5	S5	B
S6			(3)	S6	S6	S6	S6	S6	S6	S6	S6	REC
S7			RT	S7	S7	S7	S7	S7	S7	S7	S7	BASS
S8			3	S8	S8	S8	S8	S8	S8	S8	S8	MPX
S9			PTY	S9	S9	S9	S9	S9	S9	S9	S9	NOR
S10		3-CH LOGIC	(2)	S10	S10	S10	S10	S10	S10	S10	S10	RANDOM
S11		PRO LOGIC	PS	S11	S11	S11	S11	S11	S11	S11	S11	◁
S12	HALL	(DVD)	2	S12	S12	S12	S12	S12	S12	S12	S12	▷
S13	LIVE	DVD	RDS	S13	S13	S13	S13	S13	S13	S13	S13	MANUAL
S14	(VIDEO)	(5.1CH IN)	(1)	S14	S14	S14	S14	S14	S14	S14	S14	A
S15	(TAPE)	(AV)1(2)	OFF	S15	S15	S15	S15	S15	S15	S15	S15	AUTO
S16	TUNER	AV(12)		S16	S16	S16	S16	S16	S16	S16	S16	TR-1
S17	(TUNER)	(AV12)	1	S17	S17	S17	S17	S17	S17	S17	S17	REPEAT
S18	VIDEO	5.1CH IN		S18	S18	S18	S18	S18	S18	S18	S18	B

PIN ASSIGNMENT

Pin No.	1	2	3	4	5	6	7	8	9	10	11	12	13	14	15	16	17	18	19	20
Assignment	F1	F1	NP	NL	S18	S17	S16	S15	S14	S13	S12	S11	S10	S9	S8	S7	S6	S5	S4	S3

Pin No.	21	22	23	24	25	26	27	28	29	30	31	32	33	34	35	36	37	38	39	40
Assignment	S2	S1	NL	NL	G1	G2	G3	G4	G5	G6	G7	G8	G9	G10	G11	G12	NL	NP	F2	F2

F1,F2:Filament G1~G12:Grid S1~S18:Anode NP:No Pin NL:No Lead

WIRING DIAGRAM (POWER TRANSFORMER, PRIMARY & SECONDARY P.W.BOARD)

POWER TRANSFORMER, PRIMARY P.W.BOARD

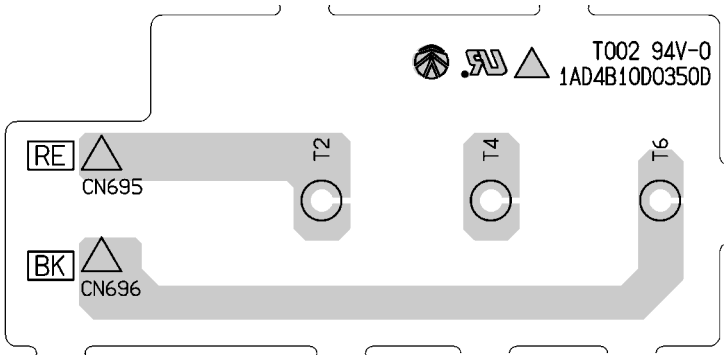

POWER TRANSFORMER, SECONDARY P.W.BOARD

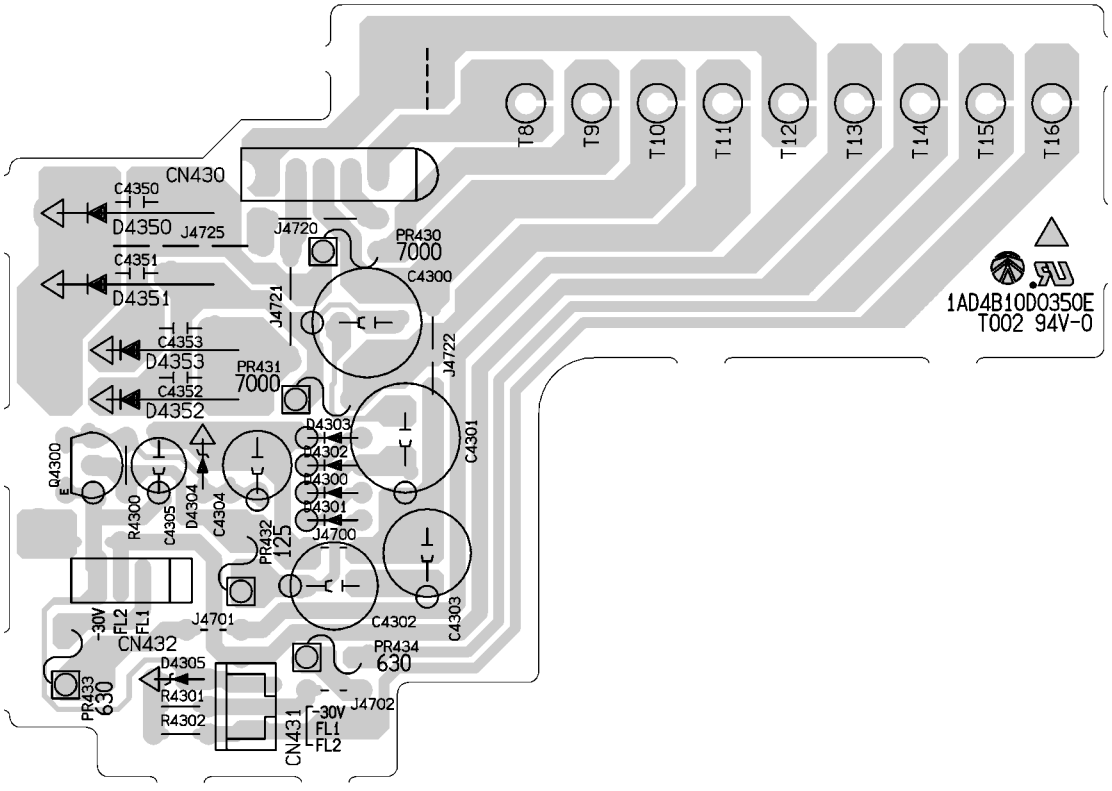

WIRING DIAGRAM (SPEAKER, HEADPHONE & SUB POWER TRANSFORMER)

SPEAKER P.W.BOARD

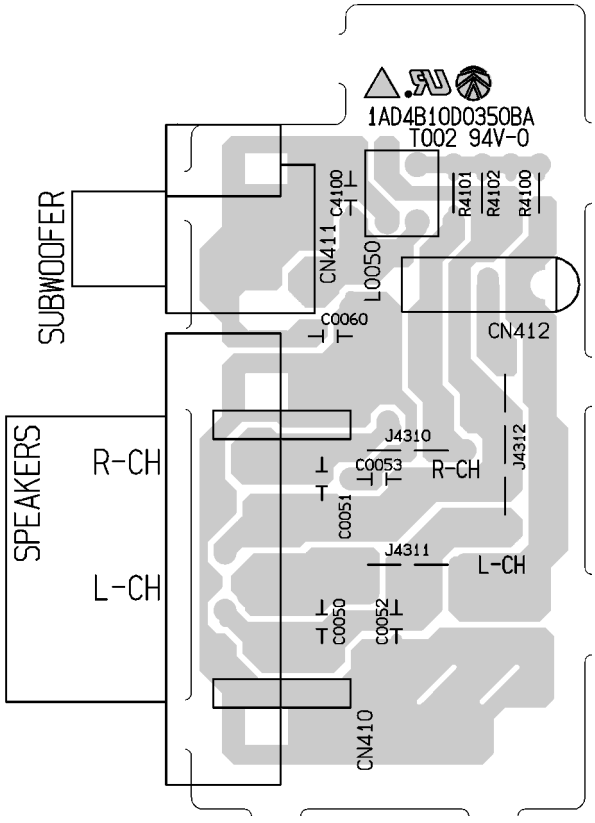

HEADPHONE P.W.BOARD

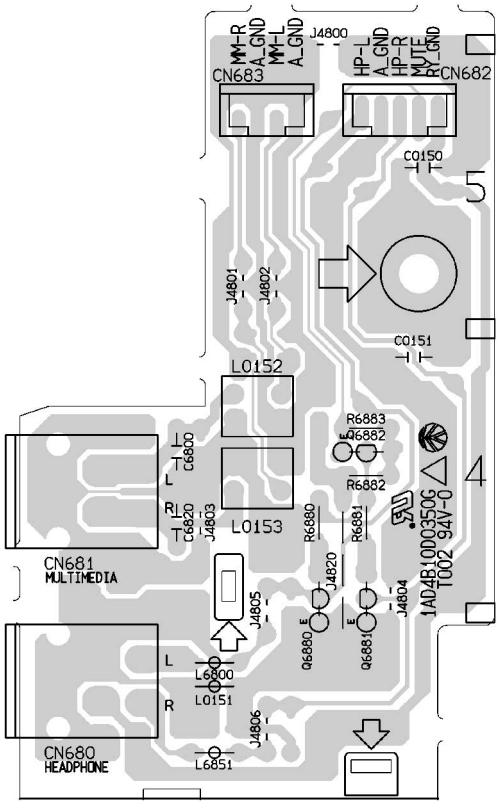

SUB POWER TRANSFORMER P.W.BOARD

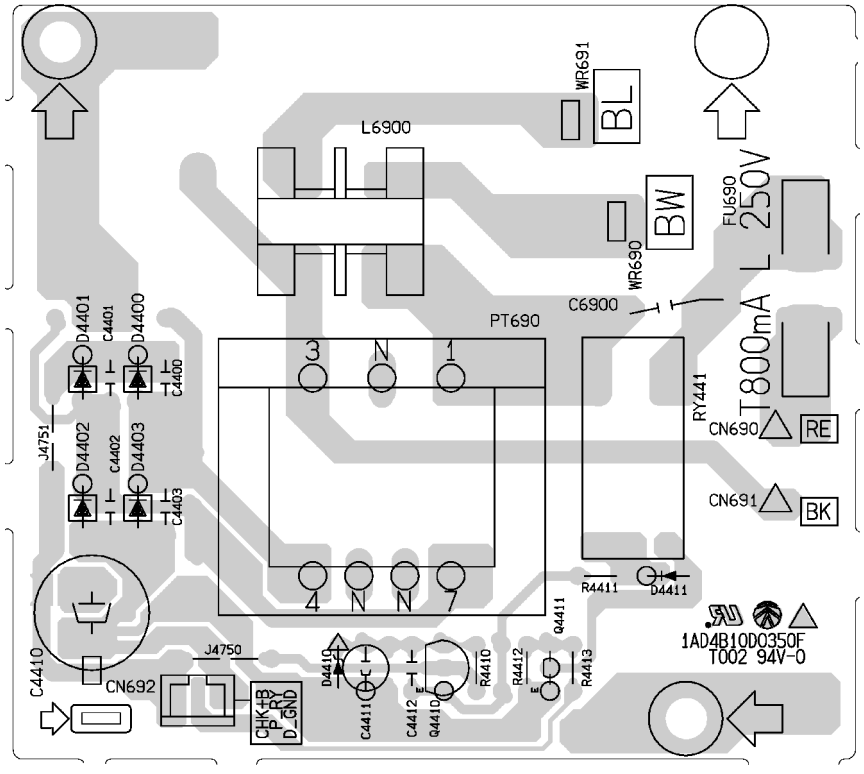

SCHEMATIC DIAGRAM (FRONT)

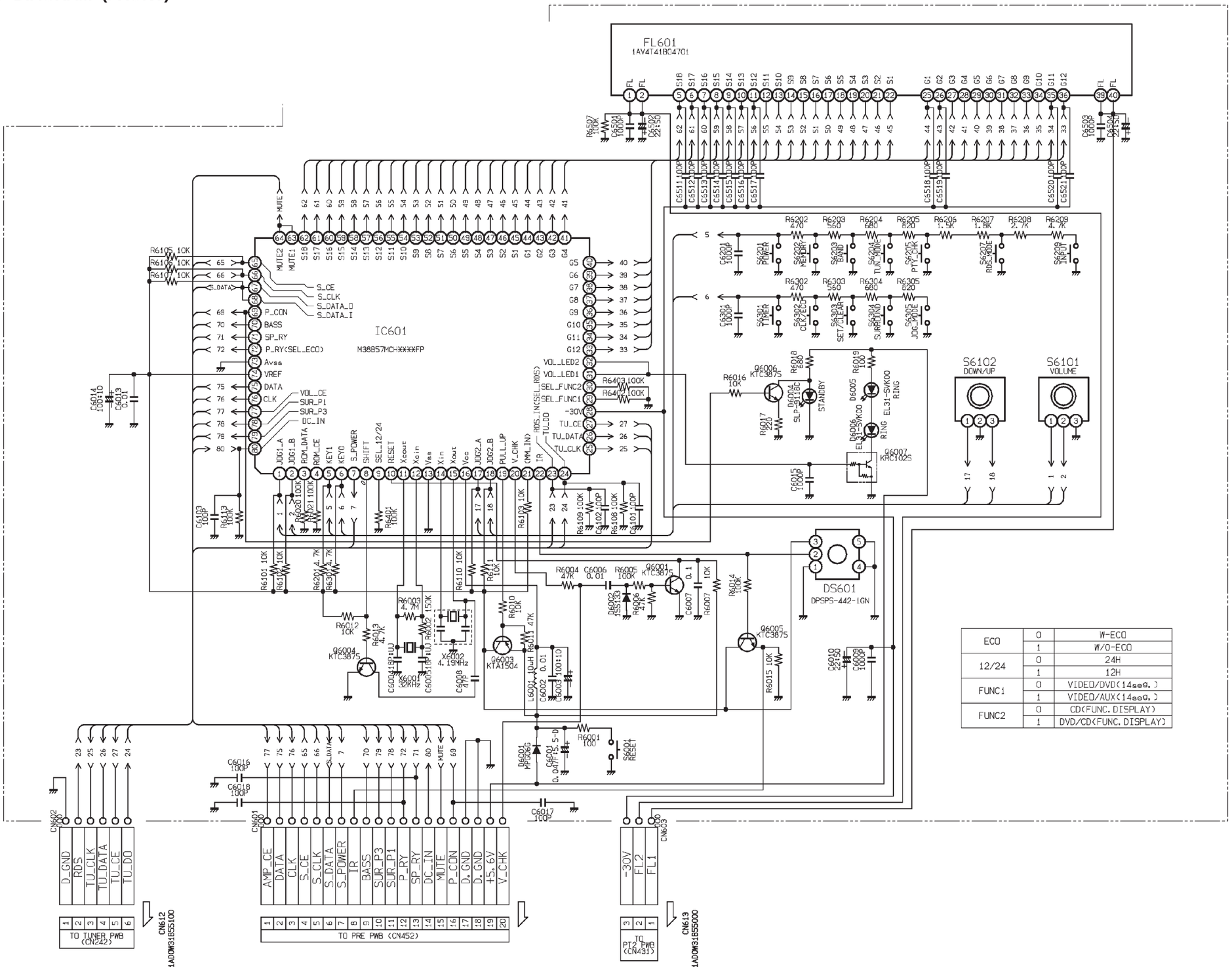

ECO	0	W-ECO
	1	W/O-ECO
12/24	0	24H
	1	12H
FUNC1	0	VIDEO/DVD(14seg.)
	1	VIDEO/AUX(14seg.)
FUNC2	0	CD(FUNC.DISPLAY)
	1	DVD/CD(FUNC.DISPLAY)

This is a basic schematic diagram.

SCHEMATIC DIAGRAM (AMPLIFIER)

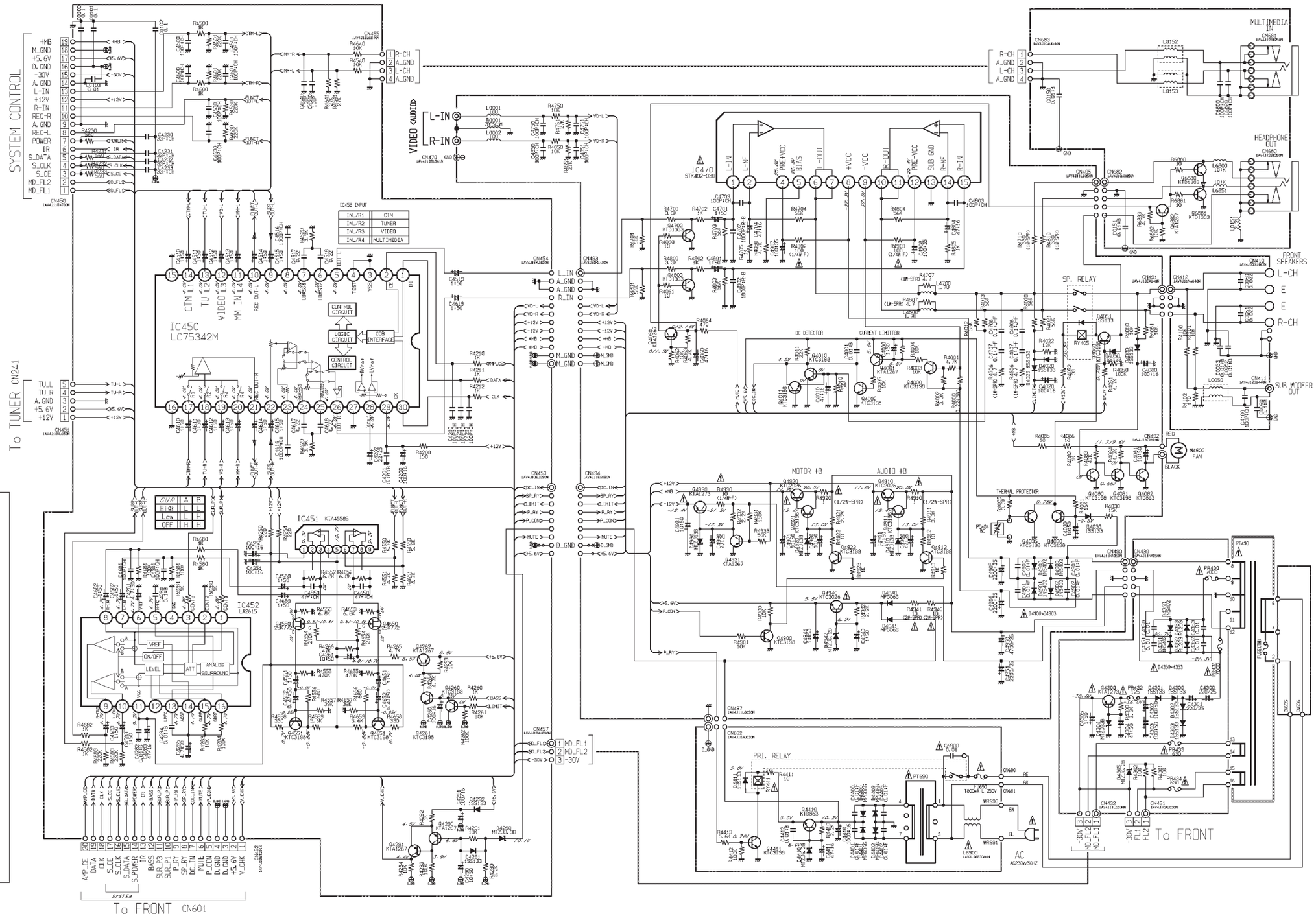

PRODUCT SAFETY NOTICE

Each precaution in this manual should be followed during servicing. Components identified with the IEC symbol ⚠ in the parts list and the schematic diagram designated components in which safety can be of special significance. When replacing a component identified by ⚠, use only the replacement parts designated, or parts with the same ratings of resistance, wattage or voltage that are designated in the parts list in this manual. Leakage-current or resistance measurements must be made to determine that exposed parts are acceptably insulated from the supply circuit before returning the product to the customer.

This is a basic schematic diagram.

SCHEMATIC DIAGRAM (TUNER)

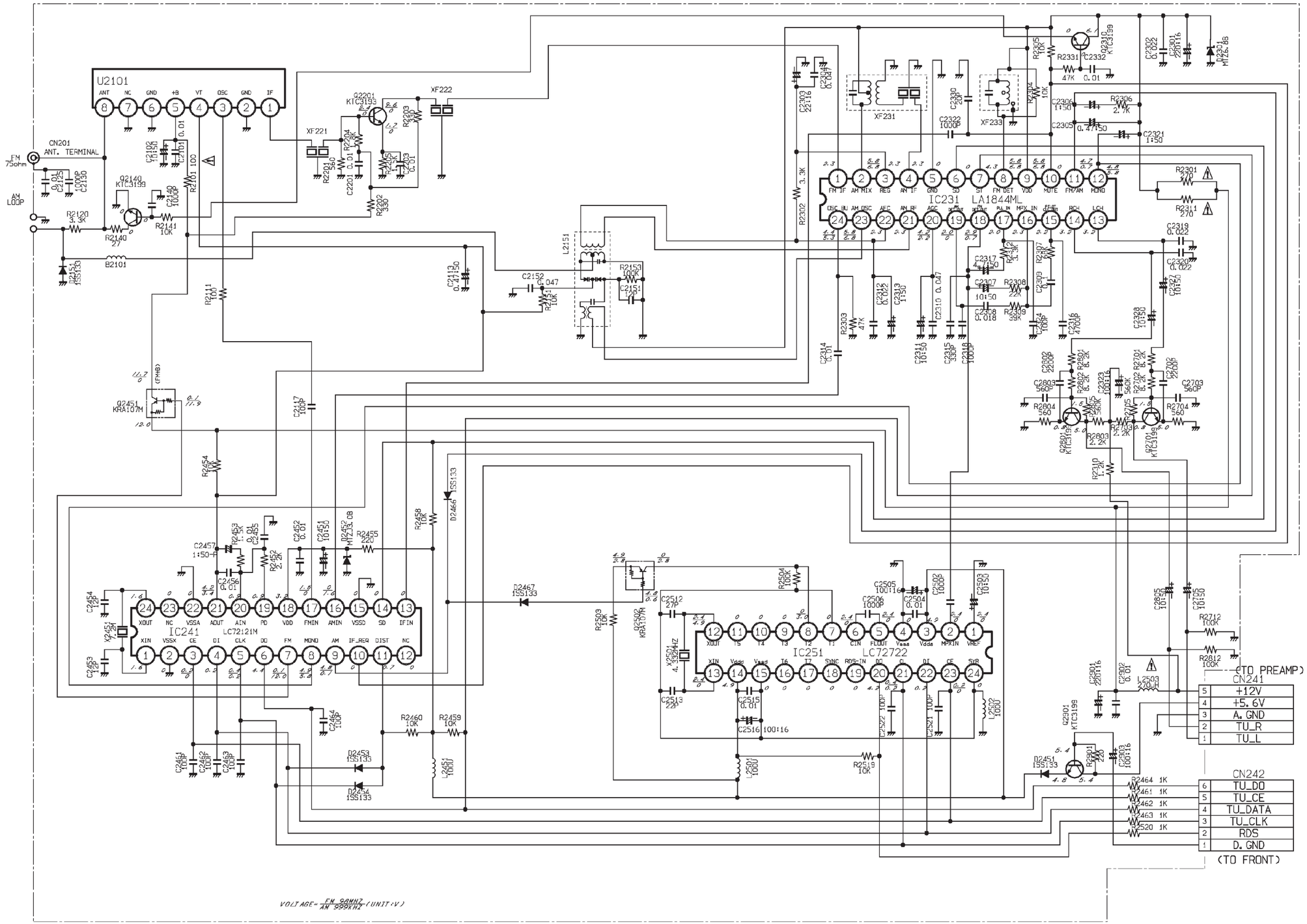

PRODUCT SAFETY NOTICE

Each precaution in this manual should be followed during servicing. Components identified with the IEC symbol ⚠ in the parts list and the schematic diagram designated components in which safety can be of special significance. When replacing a component identified by ⚠, use only the replacement parts designated, or parts with the same ratings of resistance, wattage or voltage that are designated in the parts list in this manual. Leakage-current or resistance measurements must be made to determine that exposed parts are acceptably insulated from the supply circuit before returning the product to the customer.

This is a basic schematic diagram.

WIRING CONNECTION

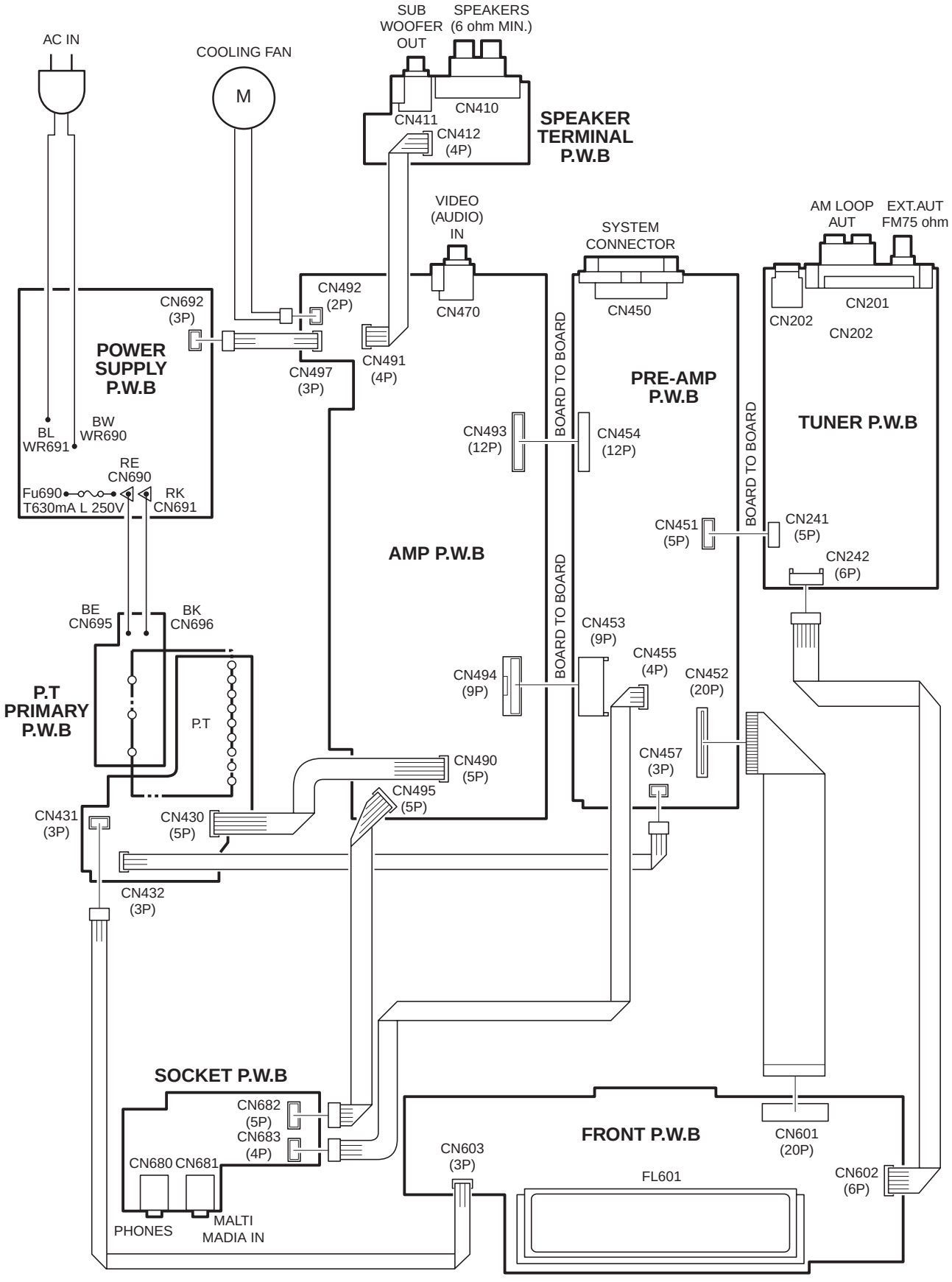

CD PICK-UP MAINTENANCE

About pick-up (Optical lens) Cleaning

Clean a lens with swab of the cotton which moistened it with alcohol, cleaning paper or cleaning disc appointed.

Specified cleaning disc : LC-1 (Part code : 645 026 1961 ..... manufactured by SANYO.)

Show a clean procedure in the following in reference by swab of cotton.

1. Cotton swab is wrapped with Cleaning paper.
2. Add the isopropyl alcohol.
3. Gently move the tip of cotton swab just like a draw a whirlpool from inside to outside on the surface of lens.

CD PLAYER ADJUSTMENTS

1. ADJUSTMENTS

(1) Confirm the tracking balance

1. Turn on the POWER switch.
2. Connect an Oscilloscope to TP2 (TE) and TP4 (VC).
3. Set the test disc.
4. Press "PLAY" button to turn into the "PLAY" mode.
5. Keep holding "SKIP" button down so as to be "SERCH" mode, then confirm that the oscilloscope waveform is symmetrical on the top and bottom in relation to 0V (VC).

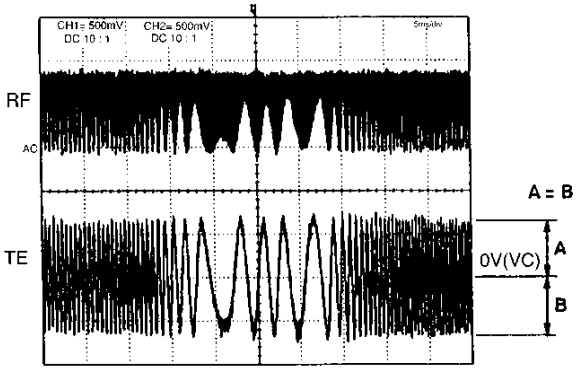

200mV/div.
5ms/div.

(2) Checking the "eye" pattern

1. Switch "ON" the POWER.
2. Connect an oscilloscope to TP1 (RF) and TP4 (VC).
3. Load the test disc.
4. Press the PLAY button.
5. Check to be sure that the "eye" pattern is at the center of waveform and that the diamond shape is clearly defined.
6. Press the STOP button.
7. Turn off the POWER switch.

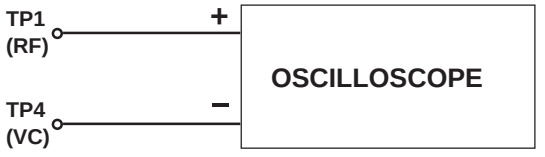

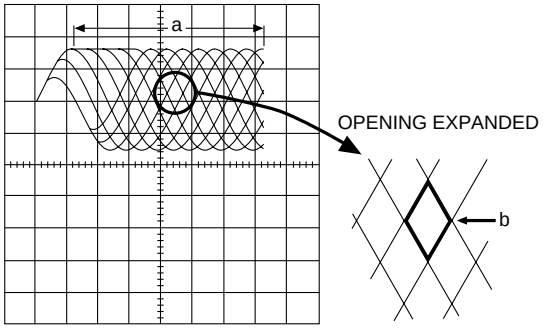

EXPLODED VIEW (CABINET & CHASSIS)

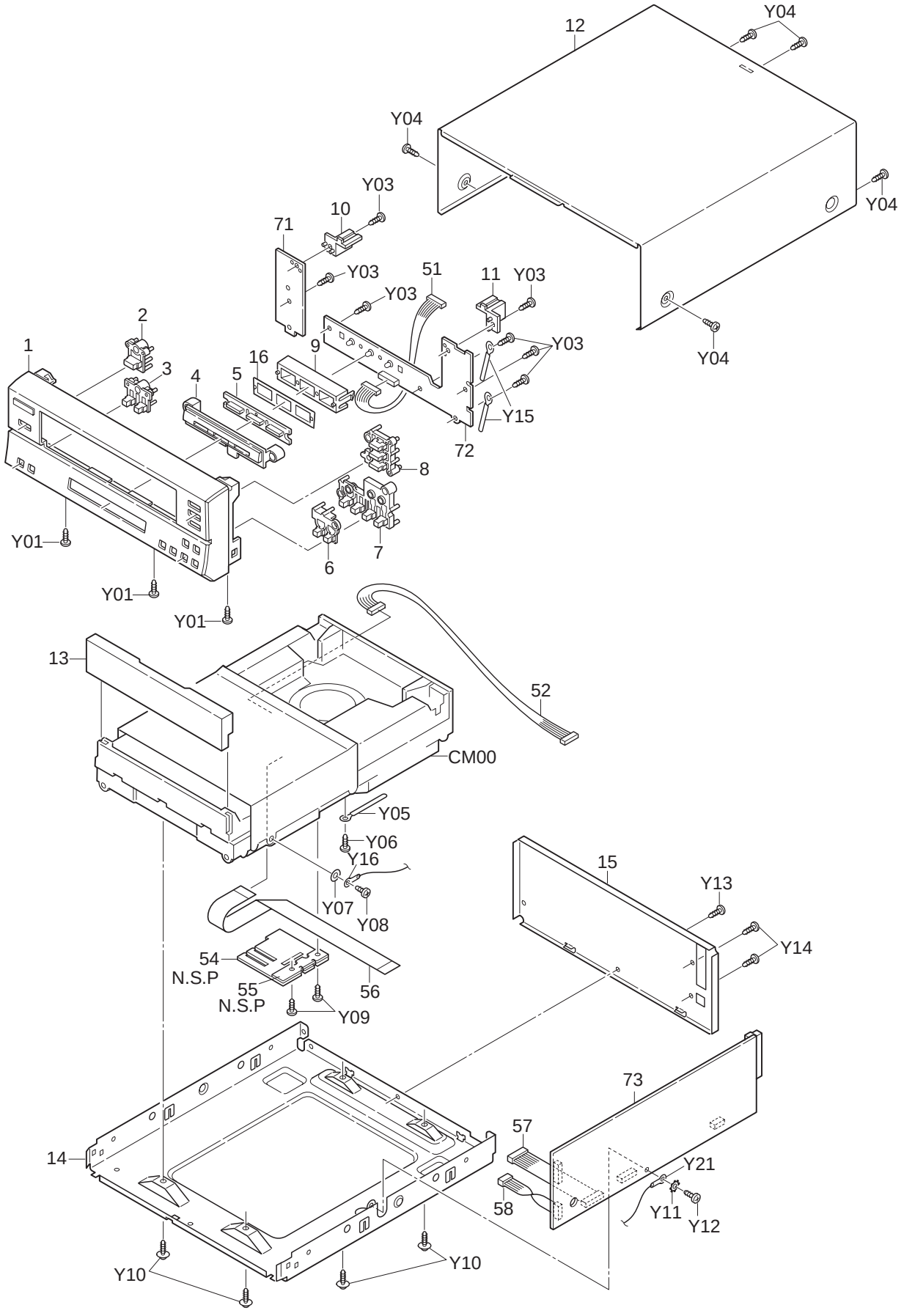

N.S.P : Not supplied as service parts.

PARTS LIST

PRODUCT SAFETY NOTICE

EACH PRECAUTION IN THIS MANUAL SHOULD BE FOLLOWED DURING SERVICING. COMPONENTS IDENTIFIED WITH THE IEC SYMBOL ⚠ IN THE PARTS LIST AND THE SCHEMATIC DIAGRAM DESIGNATED COMPONENTS IN WHICH SAFETY CAN BE OF SPECIAL SIGNIFICANCE. WHEN REPLACING A COMPONENT IDENTIFIED BY ⚠, USE ONLY THE REPLACEMENT PARTS DESIGNATED, OR PARTS WITH THE SAME RATINGS OF RESISTANCE, WATTAGE OR VOLTAGE THAT ARE DESIGNATED IN THE PARTS LIST IN THIS MANUAL. LEAKAGE-CURRENT OR RESISTANCE MEASUREMENTS MUST BE MADE TO DETERMINE THAT EXPOSED PARTS ARE ACCEPTABLY INSULATED FROM THE SUPPLY CIRCUIT BEFORE RETURNING THE PRODUCT TO THE CUSTOMER.

CAUTION : Regular type resistors and capacitors are not listed. To know those values, refer to the schematic diagram.
Regular type resistors are less than 1/4 W Carbon type and Chip type resistors.
Regular type capacitors are less than 50 V and less than 1000 µF type of Ceramic type, Electrolytic type and Chip type.

N.S.P : Not supplied as service parts.

PACKING & ACCESSORIES

REF.NO.	PART NO.	DESCRIPTION
	614 317 7920	CARTON CASE,INNER SLEEVE (DC-X8CT/UK & DC-X8CM/UK)
	614 317 7944	CARTON CASE,INNER SLEEVE (DC-088C/XE)
	614 319 0943	CARTON CASE,INNER SLEEVE (DC-088C/SP)
	614 316 2766	CUSHION,FRONT,FRONT
	614 316 2773	CUSHION,BACK,BACK
	645 047 3074	POLY SHEET-0650X0400*NC,SET (DC-X8CT/UK & DC-X8CM/UK & DC-088C/SP)
	645 047 3081	POLY SHEET-0650X0400*NC,SET (DC-088C/XE)

CABINET & CHASSIS

REF.NO.	PART NO.	DESCRIPTION
1	614 317 7463	ASSY,CABINET,FRONT(DC-X8CT/UK, DC-X8CM/UK & DC-088C/XE)
1	614 319 0592	ASSY,CABINET,FRONT(DC-088C/SP)
2	614 316 2094	BUTTON,OPEN/CLOSE(DC-X8CT/UK, DC-X8CM/UK & DC-088C/XE)
2	614 319 0691	BUTTON,OPEN/CLOSE(DC-088C/SP)
3	614 316 2100	BUTTON,MEMORY,PLAY/PAUSE (DC-X8CT/UK, DC-X8CM/UK & DC-088C/XE)
3	614 319 0707	BUTTON,MEMORY,PLAY/PAUSE (DC-088C/SP)
4	614 316 2384	DEC,ESC,LIGHTING,DISC SELECT
5	614 316 2391	DEC,WINDOW,LIGHTING, DISC SELECT
6	614 316 2131	BUTTON,PLAY,PLAY PAUSE (DC-X8CT/UK, DC-X8CM/UK & DC-088C/XE)
6	614 319 0721	BUTTON,PLAY,PLAY PAUSE (DC-088C/SP)
7	614 316 2148	BUTTON,STOP(DC-X8CT/UK, DC-X8CM/UK & DC-088C/XE)
7	614 319 0738	BUTTON,STOP(DC-088C/SP)
8	614 316 2117	BUTTON,DISC SELECT(DC-X8CT/UK, DC-X8CM/UK & DC-088C/XE)
8	614 319 0714	BUTTON,DISC SELECT(DC-088C/SP)
9	614 316 2599	REFLECTOR,LED,DISC SELECT
10	614 316 2513	MOUNTING,CABINET,L
11	614 316 2520	MOUNTING,CABINET,R
12	614 317 7418	ASSY,CABINETAFTER BENDING
13	614 316 2377	DEC,ESC,TRAY,DISC TRAY (DC-X8CT/UK, DC-X8CM/UK & DC-088C/XE)
13	614 319 0820	DEC,ESC,TRAY,DISC TRAY (DC-088C/SP)
14	614 317 7487	ASSY,CABINET,BOTTOM
15	614 316 2568	PANEL,REAR (DC-X8CT/UK & DC-X8CM/UK)
15	614 316 7839	PANEL,REAR(DC-088C/XE)
15	614 319 0851	PANEL,REAR(DC-088C/SP)
16	614 317 9245	DEC,SHEET,LIGHTING, REFLECTOR LIGHITING
	614 250 6721	FOOT,CD MECHA

FIXING PARTS

REF.NO.	PART NO.	DESCRIPTION
Y01	411 021 3503	SCR S-TPG BIN 3X10, FRONT-BOTTOM FIX
Y03	411 165 3803	SCR S-TPG BIN 2.3X10, FRONT PWB FIX
Y04	411 098 4205	SCR S-TPG BIN 3X8,CABINET
Y05	614 129 9136	LUG,MECHA LEAD DRESS
Y06	411 021 3503	SCR S-TPG BIN 3X10,LUG
Y07	411 092 2900	WASHER Z 3X10X1,MECHA
Y08	411 028 9201	SCR S-TPG PAN 3X4,MECHA
Y09	411 021 3503	SCR S-TPG BIN 3X10, LEAD DRESS PWB
Y10	411 020 9902	SCR S-TPG BRZ+FLG 3X8,CD MECHA
Y11	411 008 0402	WASHER OUT TW 3,SIDE PWB
Y12	411 021 3503	SCR S-TPG BIN 3X10,SIDE PWB
Y13	411 021 3701	SCR S-TPG BIN 3X10,BOTTOM-REAR
Y14	411 021 3701	SCR S-TPG BIN 3X10, REAR-ELECT PART
Y15	614 129 9136	LUG,FRONT PWB FIX
Y16	614 129 9082	LUG,FOR CD-MECHA WIRE

ELECTRICAL PARTS

REF.NO.	PART NO.	DESCRIPTION
51	⚠ 614 317 9221	ASSY,WIRE CD-FRONT
52	⚠ 614 305 2647	ASSY,WIRE,CD-PICKUP
or	⚠ 614 308 5782	ASSY,WIRE,CD-PICKUP
54	⚠ 614 316 4500	PWB FFC (N.S.P)
55	⚠ 614 318 0173	PWB,FFC2 (N.S.P)
56	⚠ 645 041 1793	FLEXIBLE FLAT CABLE
57	614 318 0029	ASSY,WIRE,CD-MECHA
58	614 318 8117	ASSY,WIRE,CD-MECHA

OPEN P.W.BOARD ASSY

REF.NO.	PART NO.	DESCRIPTION
71	614 316 4029	ASSY,PWB OPEN (Only initial)
CN164	614 035 4928	SOCKET,DIP 3P
or	614 237 9769	SOCKET
S1640	645 006 5958	SWITCH,PUSH 1P-1T
or	614 220 5471	SWITCH,TACT
or	614 240 1002	SWITCH,TACT
S1641	645 006 5958	SWITCH,PUSH 1P-1T
or	614 220 5471	SWITCH,TACT
or	614 240 1002	SWITCH,TACT
S1642	645 006 5958	SWITCH,PUSH 1P-1T
or	614 220 5471	SWITCH,TACT
or	614 240 1002	SWITCH,TACT

PARTS LIST

FRONT P.W. BOARD ASSY

REF.NO.	PART NO.	DESCRIPTION
72	614 316 4012	ASSY PWB FRONT (Only initial)
CN160	645 006 0861	PLUG,7P
CN161	614 035 4928	SOCKET,DIP 3P
or	614 237 9769	SOCKET
D1620	408 044 9100	LED HLMP-EL31-SVK00, FORLED_YELLOW
D1621	408 044 9100	LED HLMP-EL31-SVK00, FORLED_YELLOW
D1622	408 044 9100	LED HLMP-EL31-SVK00, FORLED_YELLOW
S1601	645 006 5958	SWITCH,PUSH 1P-1T
or	614 220 5471	SWITCH,TACT
or	614 240 1002	SWITCH,TACT
S1602	645 006 5958	SWITCH,PUSH 1P-1T
or	614 220 5471	SWITCH,TACT
or	614 240 1002	SWITCH,TACT
S1603	645 006 5958	SWITCH,PUSH 1P-1T
or	614 220 5471	SWITCH,TACT
or	614 240 1002	SWITCH,TACT
S1604	645 006 5958	SWITCH,PUSH 1P-1T
or	614 220 5471	SWITCH,TACT
or	614 240 1002	SWITCH,TACT
S1605	645 006 5958	SWITCH,PUSH 1P-1T
or	614 220 5471	SWITCH,TACT
or	614 240 1002	SWITCH,TACT
S1606	645 006 5958	SWITCH,PUSH 1P-1T
or	614 220 5471	SWITCH,TACT
or	614 240 1002	SWITCH,TACT
S1607	645 006 5958	SWITCH,PUSH 1P-1T
or	614 220 5471	SWITCH,TACT
or	614 240 1002	SWITCH,TACT
S1608	645 006 5958	SWITCH,PUSH 1P-1T
or	614 220 5471	SWITCH,TACT
or	614 240 1002	SWITCH,TACT
S1609	645 006 5958	SWITCH,PUSH 1P-1T
or	614 220 5471	SWITCH,TACT
or	614 240 1002	SWITCH,TACT

CD P.W.BOARD ASSY

REF.NO.	PART NO.	DESCRIPTION
73	614 316 4005	ASSY PWB CD (Only initial)
CN111	645 040 0513	SOCKET,FPC 15P,CD_PICKUP
CN113	645 005 8127	PLUG,6P,BASEMECHA
CN114	614 020 6562	SOCKET,4P
or	614 223 9223	SOCKET
CN115	614 020 6609	SOCKET,8P
CN190	645 006 0946	PLUG,7P
or	614 310 2632	PLUG,7P
CN199	645 045 9511	SOCKET,SYSTEM 19P,FORSYSTEM
D1211	407 063 9108	ZENER DIODE MTZJ6.8B
D1221	407 099 5303	ZENER DIODE MTZJ5.6B
D1480	407 012 4406	DIODE 1SS133
or	407 012 5809	DIODE 1SS176
D1491	407 099 5204	ZENER DIODE MTZJ5.1B
D1492	⚠ 407 097 8009	DIODE MPG06G
D1493	⚠ 407 097 8009	DIODE MPG06G
D1494	⚠ 407 097 8009	DIODE MPG06G
D1495	⚠ 407 097 8009	DIODE MPG06G
D1497	⚠ 407 097 8009	DIODE MPG06G
D1901	407 099 6805	ZENER DIODE MTZJ13B
D1902	407 099 6805	ZENER DIODE MTZJ13B
D1903	407 012 4406	DIODE 1SS133
or	407 012 5809	DIODE 1SS176

REF.NO.	PART NO.	DESCRIPTION
IC101	409 396 8100	IC LA9241ML
IC102	409 435 2106	IC LC78622NE
IC103	⚠ 409 372 9602	IC LA6541
IC131	⚠ 409 441 4507	IC TA7291S(M)
IC132	⚠ 409 441 4507	IC TA7291S(M)
IC181	409 471 0302	IC BMR-0301I
IC190	⚠ 410 409 8901	IC M38504M6H 230FP,MICON
L1451	645 001 4550	INDUCTOR,10U K
L1771	614 212 3171	INDUCTOR,FERITE
or	645 006 9864	INDUCTOR,80U
L1781	614 212 3171	INDUCTOR,FERITE
or	645 006 9864	INDUCTOR,80U
PR141	⚠ 645 014 2482	PROTECTOR,0.315A 125V
Q1301	405 008 7202	TR 2SB810-E
or	405 008 7301	TR 2SB810-F
or	405 008 6809	TR 2SB808-F-SPA
Q1401	⚠ 405 141 3604	TR KTA1273-Y
or	⚠ 405 009 5207	TR 2SB927-S
or	⚠ 405 001 9302	TR 2SA1020-Y
Q1771	405 011 8609	TR 2SC1740S-S
or	405 011 8500	TR 2SC1740S-R
or	405 015 6403	TR 2SC2785-F
or	405 015 6205	TR 2SC2785-E
or	405 143 8706	TR KTC3199-GR
Q1772	405 149 6003	TR 2SJ498,FET_FOR_A_SW
Q1773	405 000 0508	TR DTA114ES
or	405 110 5400	TR KRA102M-A
Q1781	405 011 8609	TR 2SC1740S-S
or	405 011 8500	TR 2SC1740S-R
or	405 015 6403	TR 2SC2785-F
or	405 015 6205	TR 2SC2785-E
or	405 143 8706	TR KTC3199-GR
Q1782	405 149 6003	TR 2SJ498,FET_FOR_A_SW
Q1783	405 000 0508	TR DTA114ES
or	405 110 5400	TR KRA102M-A
Q1902	405 006 1905	TR 2SA933S-S
or	405 006 1806	TR 2SA933S-R
or	405 004 4601	TR 2SA608-F-SPA
or	405 004 5103	TR 2SA608-G-SPA
or	405 143 6504	TR KTA1267-GR
Q1903	405 011 8609	TR 2SC1740S-S
or	405 011 8500	TR 2SC1740S-R
or	405 015 6403	TR 2SC2785-F
or	405 015 6205	TR 2SC2785-E
or	405 143 8706	TR KTC3199-GR
R1211	⚠ 402 082 0709	RESISTOR 5.6 J- 2W
or	⚠ 402 072 0207	RESISTOR 5.6 J- 2W
R1221	⚠ 402 082 0709	RESISTOR 5.6 J- 2W
or	⚠ 402 072 0207	RESISTOR 5.6 J- 2W
S1650	407 218 1100	PHOTO COUPLE GP1FA550TZ
or	407 215 1608	PHOTO COUPLE TOTX178A
SH101	614 317 4714	SHIELD,SYSTEM CONNECTOR
T1001	407 212 0505	THERMISTOR RXE065
X1451	645 020 9024	OSC,CRYSTAL 16.9344MHZ
X1900	645 018 6103	OSC,CERAMIC 6.000MHZ

EXPLODED VIEW (CD MECHANISM)

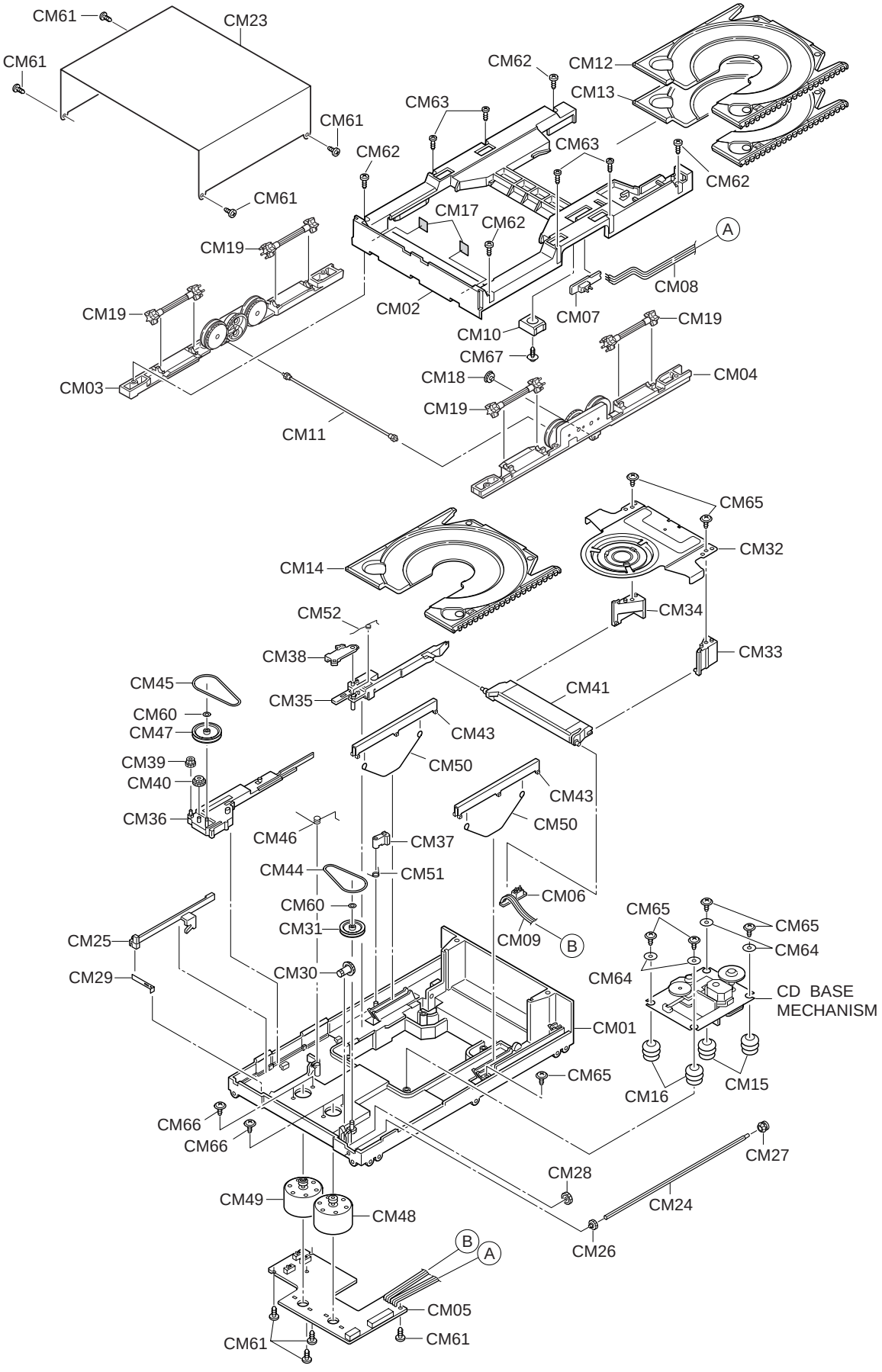

PARTS LIST

CD MECHA ASSY(PM-CDS800TP-SH... Only initial))

REF.NO.	PART NO.	DESCRIPTION
CM00	614 309 7181	ASSY,MECHA,PM-CDS800TP-SH, CD CHANGER (Only initial)
CM01	645 033 6072	ASSY,CHASSIS,CHASSIS ASSY
CM02	645 033 7512	DRAWER 2
CM03	645 033 5976	ASSY,HOLDER L, DRAWER HOLDER L ASS
CM04	645 033 6898	ASSY,HOLDER R3B, DRAWER HOLDER R ASSY
CM05	645 033 6041	ASSY,PC BOARD A
CM06	645 033 6065	ASSY,PC BOARD B
CM07	645 033 6058	ASSY,PC BOARD C
CM08	645 033 5945	LEAD WIRE
CM09	645 033 5952	LEAD WIRE
CM10	645 033 6713	SPACER SW
CM11	645 033 6027	ASSY,GEAR DRIVE, SINCHRO GEAR ASSY
CM12	645 041 2417	ASSY,CRG 101,CARRIAGE NO.1
CM13	645 041 2424	ASSY,CRG 201
CM14	645 041 2431	ASSY,CRG 301
CM15	645 033 5877	INSULATER
CM16	645 033 5884	INSULATER
CM17	645 033 5907	CUSHION
CM18	645 033 6324	BEVEL GEAR 4
CM19	645 047 8543	ASSY,GEAR STAR
CM23	645 033 6089	COVER 2
CM24	645 033 6539	SHAFT
CM25	645 033 6461	SLIDER 4
CM26	645 033 6201	GEAR SPLINE
CM27	645 033 6232	BEVEL GEAR 1
CM28	645 033 6270	GEAR IDLER 1
CM29	645 033 6102	PLATE SPRING
CM30	645 033 6287	BEVEL GEAR 3
CM31	645 033 6225	PULLEY C
CM32	645 041 2448	ASSY,CLAMPER SA, CLAMPER (SANYO)
CM33	645 033 6140	ARM SLIDER R
CM34	645 033 6157	ARM SLIDER L
CM35	645 033 6430	SLIDER 1
CM36	645 033 5969	ASSY,SLIDER 2, FWD/RVS SLIDE ASSY
CM37	645 033 6980	ARM STOPPER A2
CM38	645 033 6416	ARM STOPPER B
CM39	645 033 6263	GEAR IDLER A2
CM40	645 033 6218	GEAR IDLER C
CM41	645 047 8628	LEVER 2
CM43	645 033 6454	LIFTER,CARRIGE LIFT UP
CM44	645 033 5778	BELT
or	645 047 8611	BELT
CM45	645 033 5785	BELT
or	645 047 8635	BELT
CM46	645 033 7048	SPRING
CM47	645 033 6393	PULLEY A
CM48	645 033 6003	ASSY,MOTOR CRG S, CARRIGE MOTOR ASSY
CM49	645 033 6010	ASSY,MOTOR DRW S, DRAWER MOTOR ASSY
CM50	645 033 5723	SPRING
CM51	614 303 7545	SPRING
CM52	645 047 8604	SPRING
CM60	645 033 5648	WASHER
CM61	645 033 5594	SCREW
CM62	645 033 7031	SCREW
CM63	645 033 5563	SCREW
CM64	645 033 5631	WASHER
CM65	645 033 5570	SCREW
CM66	645 033 5600	SCREW
CM67	645 033 5617	SCREW

EXPLODED VIEW (CD BASE MECHANISM)

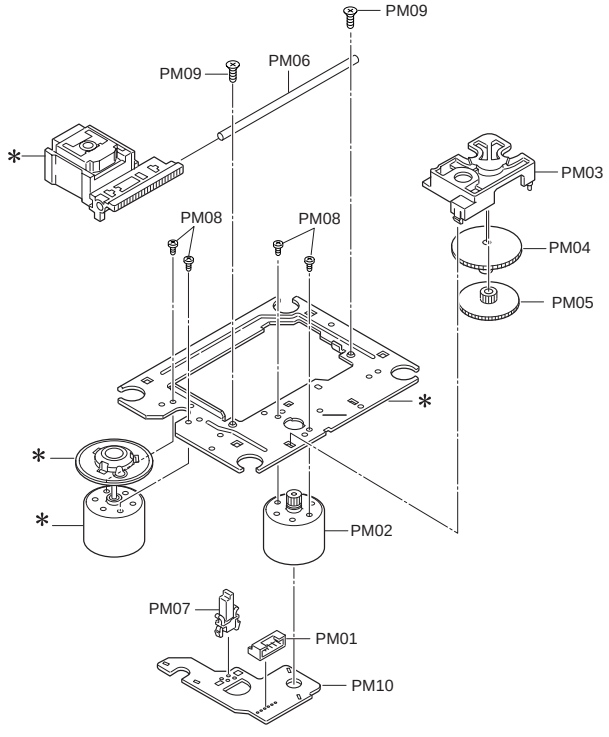

CD BASE MECHA ASSY

REF.NO.	PART NO.	DESCRIPTION
	614 307 9804	ASSY,MECHA,CDDA11N-SASH
PM01	620 021 8436	PLUG 6P
PM02	620 233 0853	ASSY MOTOR,BASE CHASSIS ASSY
PM03	620 236 3776	COVER,GEAR
PM04	620 230 8753	GEAR MIDDLE,RELAY GEAR
PM05	620 230 8760	GEAR DRIVE
PM06	620 231 0596	SHAFT SLIDE,PICK RAIL
PM07	620 233 0860	SWITCH LEAG,LIMIT SWITCH
PM08	411 104 8401	SCR PAN PCS 2X3
PM09	411 027 5402	SCR S-TPG FLT 2.6X6
PM10	620 236 0836	PWB,MOTOR

*N.S.P : Not supplied as service parts.

WIRING CONNECTION

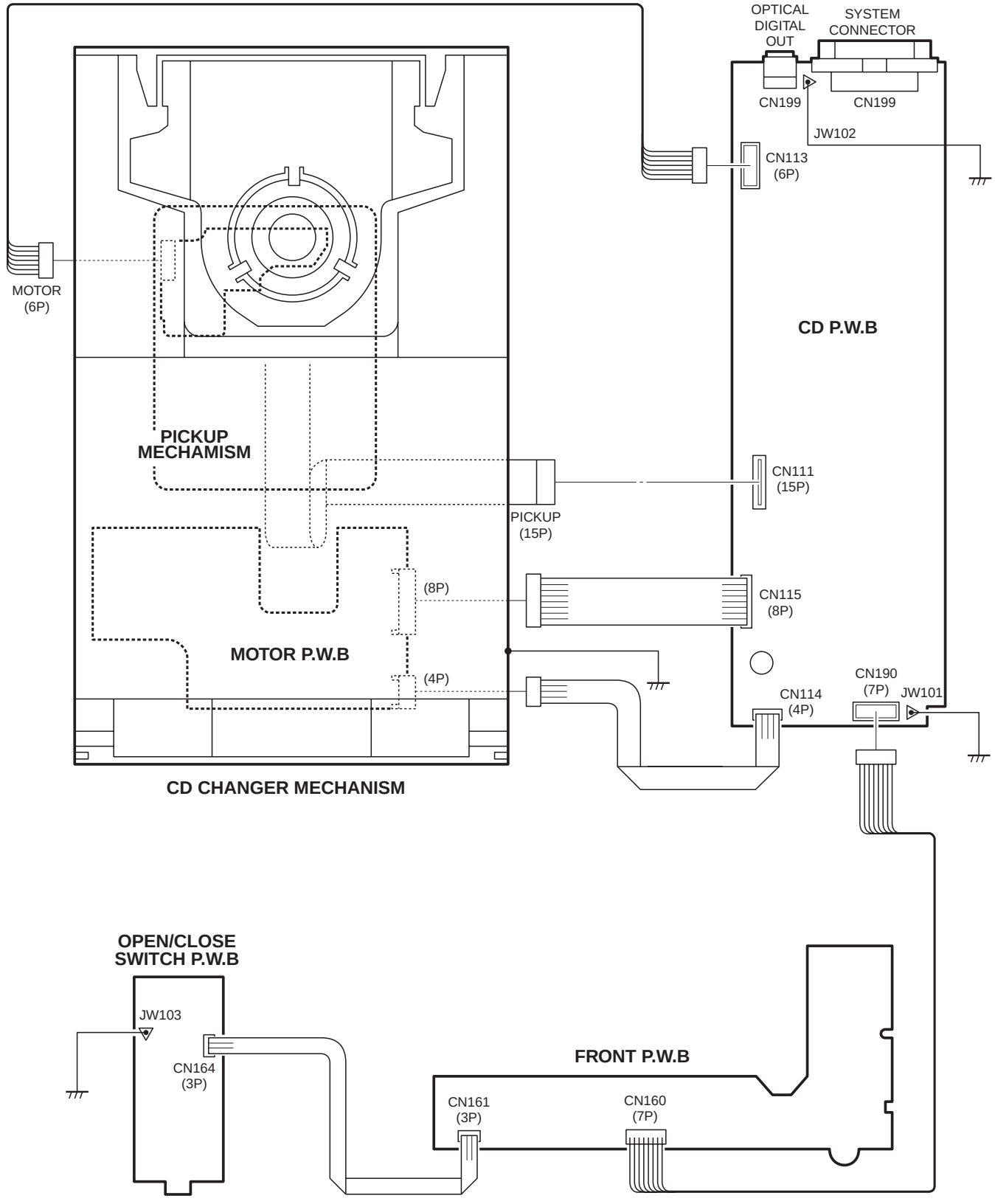

SCHEMATIC DIAGRAM (CD)

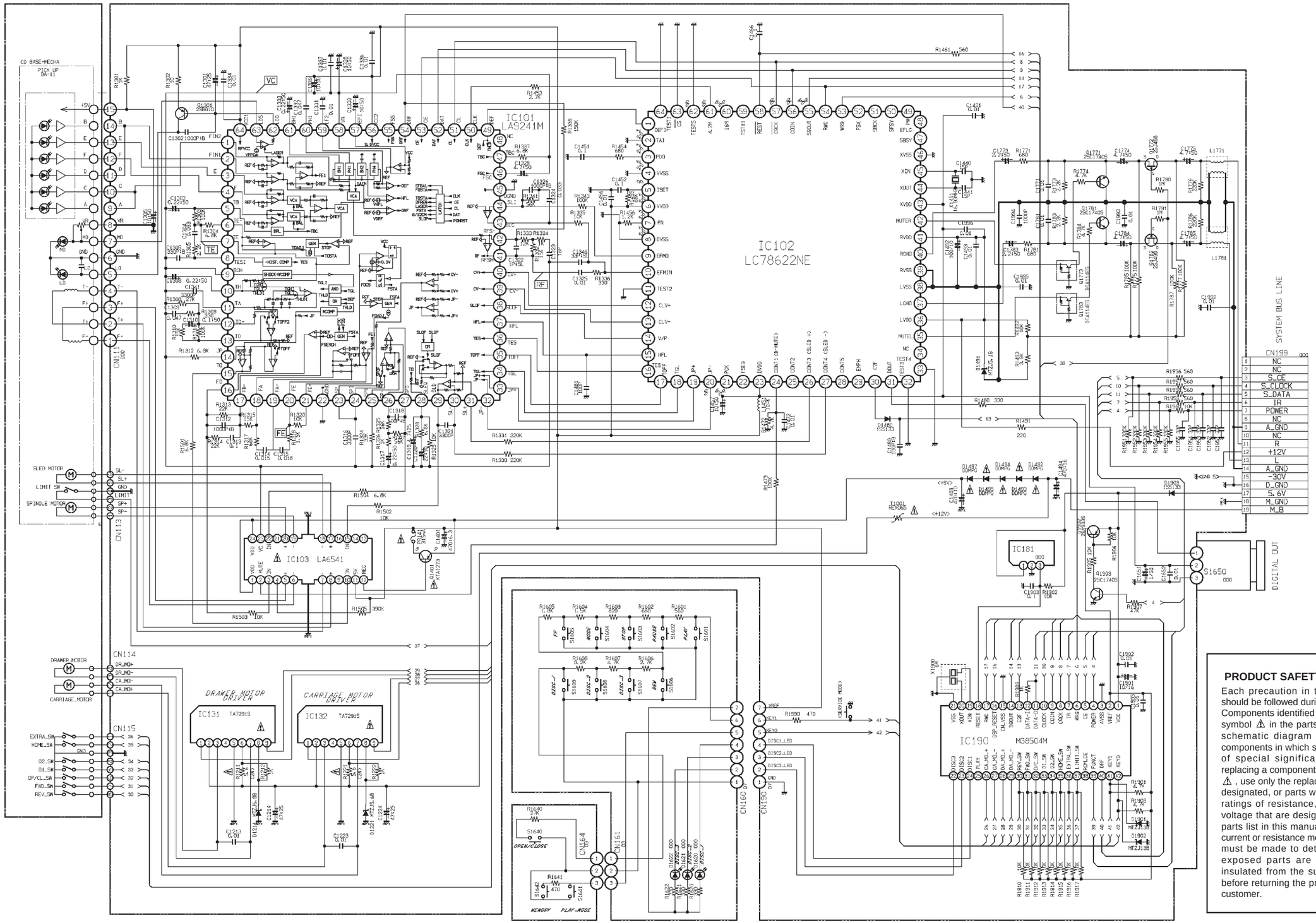

This is a basic schematic diagram.

IC BLOCK DIAGRAM & DESCRIPTION

IC101 LA9241M (Servo Signal Processor)

LA9240M (Servo Signal Processor)

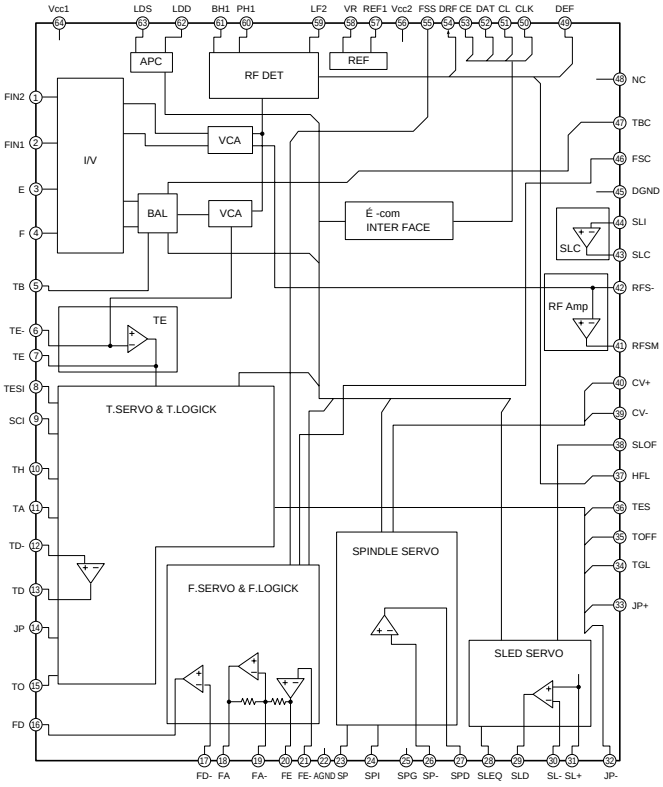

No.	Pin Name	I/O	Function
1	FIN2	I	Connection Pin for Photo Diode of Pickup.
2	FIN1	I	FIN2 + FIN1 = RF, FIN2 - FIN1 = FE
3	E	I	Connection Pin for Photo Diode of Pickup.
4	F	I	E - F = TE
5	TB	I	Input Pin for DC ingredient of TE Signal.
6	TE-	I	Connection Pin for Gain Setting Resistor of TE Signal to TE Signal Pin.
7	TE	O	Output Pin for Tracking Error Signal.
8	TESI	I	Input Pin for Track Error Sense Comparator. TE Signal through Band Pass, and Inputted.
9	SCI	I	Input Pin for Shock Detection.
10	TH	I	Connection Pin for Time Constant Setting of Tracking Gain.
11	TA	O	Output Pin for TA Amplifier.
12	TD-	I	Connection Pin for Constant Tracking Phase Compensation, Consist of between TD and VR.
13	TD	I	Connection Pin for Constant of Tracking Phase Compensation.
14	JP	I	Connection Pin for Amplitude Setting of Tracking Jump (Kick Pulse) Signal.
15	TO	O	Output Pin for Tracking Control Signal.
16	FD	O	Output Pin for Focusing Control Signal.
17	FD-	I	Connection Pin for Constant of Focusing Phase Compensa ion, Consist of between FD and FA.
18	FA+	I	Connection Pin for Constant of Focusing Phase Compensation, Consist of between FD- and FA-.
19	FA-	I	Connection Pin for Constant of Focusing Phase Compensa ion, Consist of between FA and FE.
20	FE	O	Output Pin for Focusing Error Signal.
21	FE-	I	Connection Pin for Gain Setting Resistor of FE Signal to FE Signal Pin.
22	AGND	-	Ground for Analog Signal.

No.	Pin Name	I/O	Function
23	SP	O	Output Pin for Single End of Input Signal of the CV+, CV- Pin.
24	SPI	I	Input Pin for Spindle Amplifier.
25	SPG	I	Connection Pin for Gain Setting Resistor, when Spindle 12 cm Mode.
26	SP-	I	Connection Pin for Constant of Spindle Phase Compensation with SPD Pin.
27	SPD	O	Output Pin for Spindle Control Signal.
28	SLEQ	I	Connection Pin for Constant of Sled Phase Compensation.
29	SLD	O	Output Pin for Sled Control Signal.
30	SL-	I	Input Pin for Sled Signal from Micro Processor.
31	SL+	I	
32	JP-	I	Input Pin for Tracking Jump Signal from Digital
33	JP+	I	Signal Processor.
34	TGL	I	Input Pin for Tracking Gain Control Signal from Digital Signal Processor. TGL = H : Gain Low
35	TOFF	I	Input Pin for Tracking Off Control Signal from Digital Signal Processor. TOFF = H : OFF
36	TES	O	Output Pin for Track Error Sense Signal to Digital Signal Processor.
37	HFL	I	High Frequency Level Signal Use Detection Main-Beam Posi ion is on the pit or mirror.
38	SLOF	I	Input Pin for Sled Servo Off Control.
39	CV-	I	Input Pin for Constant Linear Velocity Error
40	CV+	I	Signal from Digital Signal Processor.
41	RFSM	O	Output Pin for RF Signal.
42	RFS-	I	Connection Pin for Gain Setting of RF and Constant Setting of 3T Compensation of he EFM Signal with RFSM Pin.
43	SLC	O	Slice Level Control Signal is Output Pin. It Control Level of Data-Slice by Digital Signal Processor of he RF Waveform.
44	SLI	I	Input Pin for Level Control of Data-Slice by Digital Signal Processor.
45	DGND	-	Ground for Digital Signal.
46	FSC	O	Output Pin for Focus Search Smooth Condenser
47	TBC	O	Connection Pin for Variable Range Set ing of EF Balance.
48	NC	-	No Connect
49	DEF	O	Output Pin for Defect Detection of Disc.
50	CLK	I	Input Pin for Reference Clock Pulse. (4.23 MHz of Digital Signal Processor)
51	CL	I	Input Pin of Clock Pulse for Command from Micro Processor.
52	DAT	I	Input Pin of Data for Command from Micro Processor.
53	CE	I	Input Pin of Chip Enable for Command from Micro Processor.
54	DRF	O	Output Pin for Detect of RF Level.
55	FSS	I	Select Pin for Focus Search Mode
56	VCC2	-	VCC for Servo and Digital Root.
57	REFI	I	Bus Control Connection Pin for Reference Voltage.
58	VR	O	Output Pin for Reference Voltage.
59	LF2	I	Connection Pin for Time Constant Set ing of Detect Detection of the Disc.
60	PH1	I	Capacitor Connection Pin for Peak-hold of RF Signal.
61	BH1	I	Capacitor Connection Pin for Bottom-hold of RF Signal.
62	LDD	O	Output Pin of APC (Automatic Power Control) Circuit.
63	LDS	I	Input Pin of APC (Automatic Power Control) Circuit.
64	VCC1	I	VCC for RF Root.

IC BLOCK DIAGRAM & DESCRIPTION

IC102 LC78622NE (Digital Signal Processor)

No.	Pin Name	I/O	Function
1	DEFI	I	Input terminal for detect signal of defect
2	TAI	I	Input terminal for test.
3	PDO	O	The phase comparison output terminal for external VCO control.
4	VVSS	-	Ground terminal for built-in VCO
5	ISET	I	Resistance connection terminal for electric current adjustment of PDO output.
6	VVDD	-	Built-in VCO power supply terminal.
7	FR	I	VCO frequency range adjustment.
8	VSS	-	Ground for Digital
9	EFMO	O	EFM signal output terminal for slice level control.
10	EFMIN	I	EFM signal input terminal for slice level control.
11	TEST2	I	TEST pin. Normal time is non connection.
12	CLV+	O	Output terminal for Disc motor control.
13	CLV-	O	Output terminal for Disc motor control.
14	V/P	O	Change of rough servo / phase control Rough servo : "H", Phase control : "L"
15	HFL	I	Input terminal of track search signal.
16	TES	I	Input terminal of tracking error signal.
17	TOFF	O	Output terminal of tracking off.
18	TGL	O	Output terminal for change of tracking gain.
19	JP+	O	Output terminal for tracking jump control.
20	JP-	O	Output terminal for tracking jump control.
21	PCK	O	Clock monitor output terminal for EFM data playback. (4.3218 MHz)
22	FSEQ	O	Output terminal for detect of SYNC signal.
23	DVDD	-	+5V
24	CONT1	I/O	This output can control at serial control from micro processor.
25	CONT2	I/O	
26	CONT3	I/O	
27	CONT4	I/O	
28	CONT5	I/O	
29	EMPH	O	Output terminal of de-emphasis monitor . "H" : de-emphasis
30	C2F	O	Output terminal of C2 flag
31	DOUT	O	Output terminal of digital out

No.	Pin Name	I/O	Function
32	TEST3	I	Test pin.
33	TEST4	I	Test pin.
34	NC	-	Non connection.
35	MUTEL	O	Mute output terminal for L-ch
36	LVDD	-	Power supply for L-ch
37	LCHO	O	Output terminal for L-ch
38	LVSS	-	GND for L-ch
39	RVSS	-	GND for R-ch
40	RCHO	O	Output terminal for R-ch
41	RVDD	-	Power supply for R-ch
42	MUTER	O	Mute output terminal for R-ch
43	XVDD	-	Power supply of crystal oscillation
44	XOUT	O	Connection terminal of crystal oscillation (16.9344MHz)
45	XIN	I	Connection terminal of crystal oscillation (16.9344MHz)
46	XVSS	-	GND of crystal oscillation
47	SBSY	O	Output terminal for synchronizing signal of sub-cord block
48	EFLG	O	Output terminal for correction monitor of C1, C2, Single and Double
49	PW	O	Output terminal for sub-cord of P, Q, R, S, T, U and W
50	SFSY	O	Output terminal for synchronizing signal of sub-cord frame
51	SBCK	I	Input terminal for readout clock of sub-cord
52	FSX	O	Output terminal of Synchronizing signal (7.35kHz)
53	WRQ	O	Output terminal for standby of sub-cord Q output
54	RWC	I	Input terminal of read / write control
55	SQOUT	O	Output terminal of sub-cord Q
56	COIN	I	Input terminal of command from micro processor
57	CQCK	I	Clock input for reading sub-cord from SQOUT
58	RES	I	Reset (turn on : L)
59	TST11	O	Test pin
60	16M	O	16.9344MHz
61	4.2M	O	4.2336MHz
62	TEST5	I	Test pin
63	CS	I	Chip select terminal
64	TEST1	I	Test pin

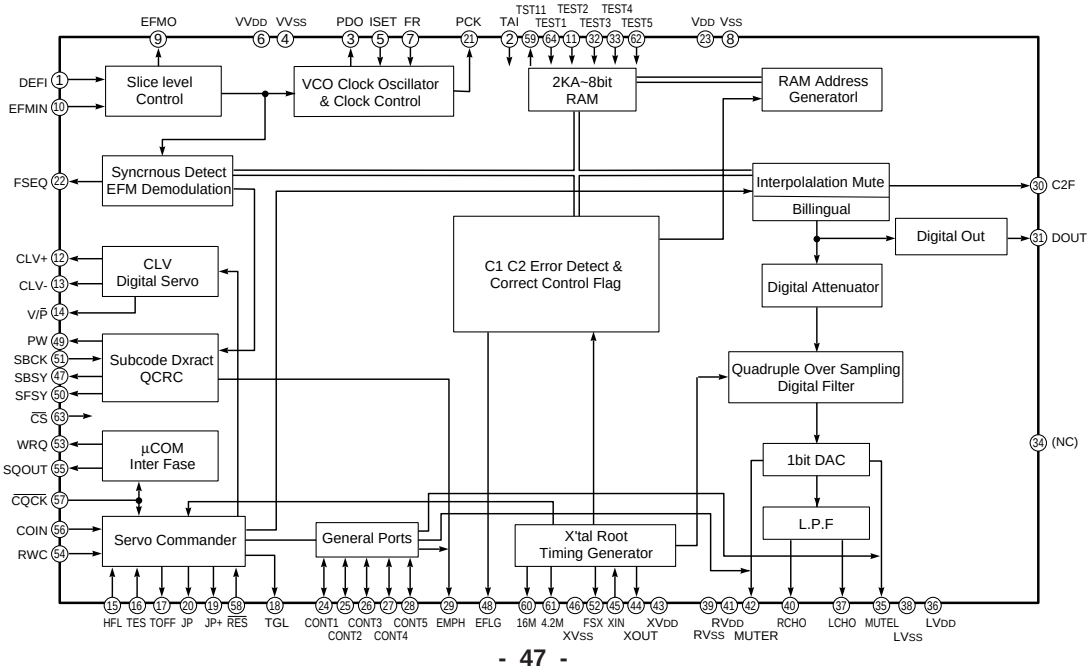

IC BLOCK DIAGRAM & DESCRIPTION

IC190 M38504M6H-230FP (Single Micro chip 8-bit)

Pin	Name	Function
1	V_{CC}	Apply voltage of 2.7 - 5.5V to V_{CC}, and 0V to V_{SS}.
2	V_{REF}	Reference voltage input pin for A-D converter.
3	AV_{SS}	Connect V_{SS}.
4	$P4_4/INT_3/PWM$	8-bit CMOS I/O port with the same function as port P0. CMOS compatible input level. CMOS 3-state output structure.
5	$P4_3/INT_2$	
6	$P4_2/INT_1$	
7	$P4_1/INT_0$	
8	$P4_0/CNTR_1$	
9	$P2_7/CNTR_0/S_{RDY}$	I/O direction register allows each pin to be individually programmed as either input or
10	$P2_6/S_{CLK}$	8-bit CMOS I/O port. CMOS compatible input level. $P2_0$, $P2_1$, $P2_4$ to $P2_7$: CMOS 3-state output structure.
11	$P2_5/SCL_2/T_XD$	
12	$P2_4/SDA_2/R_XD$	
13	$P2_3/SCL_1$	$P2_2$ to $P2_5$ can be switched between CMOS compatible input level or SMBUS input level in the I^2C-BUS interface function.
14	$P2_2/SDA_1$	
16	$P2_1/X_{CIN}$	
17	$P2_0/X_{OUT}$	$P2_4$, $P2_3$: N-channel open-drain structure in the I^2C-BUS interface function. $P2_2$, $P2_3$: N-channel open-drain structure.
15	CNV_{SS}	This pin controls the operation mode of the chip. Normally connected to V_{SS}
18	$\overline{RESET}$	Reset input pin for active "L".
19	X_{IN}	Input and output pins for the clock generating circuit. When an external clock is used, connect the clock source to the X_{IN} pin and leave the X_{OUT} pin open.
20	X_{OUT}	Connect a ceramic resonator or quartz-crystal oscillator between the X_{IN} and X_{OUT} pins to set the oscillation frequency.
21	V_{SS}	Apply voltage of 2.7 - 5.5V to V_{CC}, and 0V to V_{SS}.
22	$P1_7$	8-bit CMOS I/O port. CMOS 3-state output structure.
23	$P1_6$	
24	$P1_5$	
25	$P1_4$	
26	$P1_3$	I/O direction resister allows each pin to be individually programmed as either input or output. CMOS compatible.
27	$P1_2$	
28	$P1_1$	
29	$P1_0$	
30	$P0_7$	$P1_3$ to $P1_7$ (5 bits) are enabled to output large current for LED drive (M38513E4/M4). $P1_0$ to $P1_7$ (8-bits) are enabled to output large current for LED drive (M38514E6/M6)
31	$P0_6$	
32	$P0_5$	
33	$P0_4$	
34	$P0_3$	
35	$P0_2$	
36	$P0_1$	
37	$P0_0$	
38	$P3_4/AN_4$	8-bit CMOS I/O port with the same function as port P0. CMOS compatible input level. CMOS 3-state output structure.
39	$P3_3/AN_3$	
40	$P3_2/AN_2$	
41	$P3_1/AN_1$	
42	$P3_0/AN_0$	

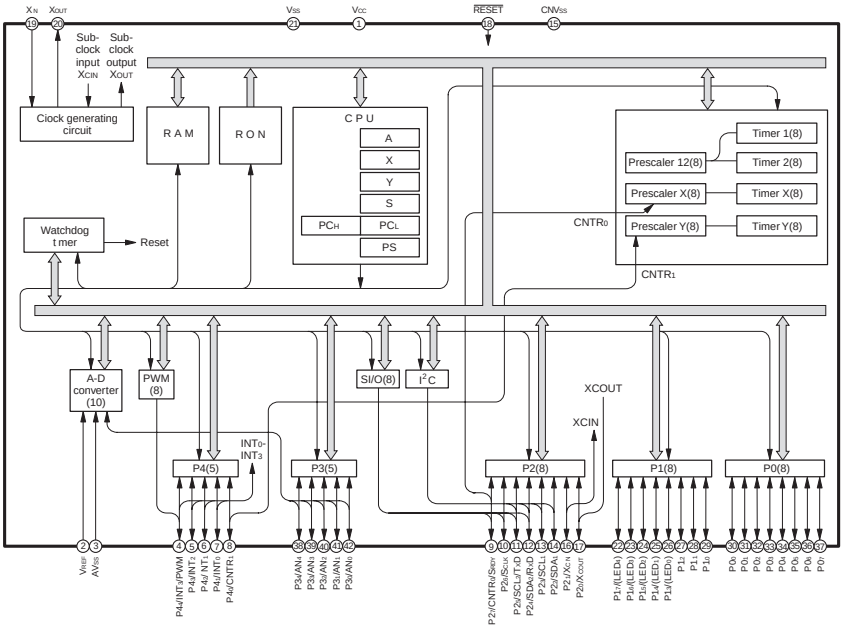

IC103 LA6541 (Pick-up Actuator & Motor Driver)

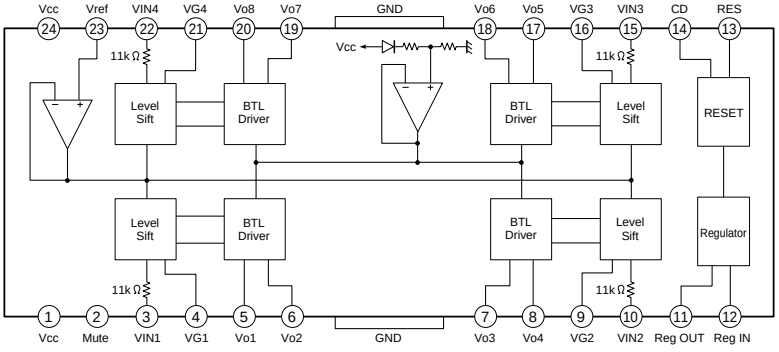

IC131.IC132 TA7291S(Bridge Driver)

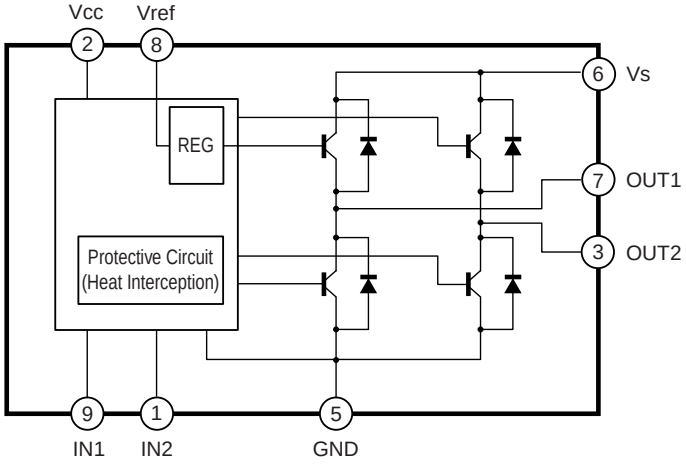

TAPE ADJUSTMENTS

1. Azimuth Adjustment

- Be sure to clean the heads before attempting to make any adjustment.
- Be sure both channels (1 and 2) are the same level.
  (Using a dual-channel oscilloscope)
- Be sure both channel's waveform are same for the phase matching.
- After completion of the adjustment, use the threadlock (TB-1401B) to secure the azimuth adjustment screws.

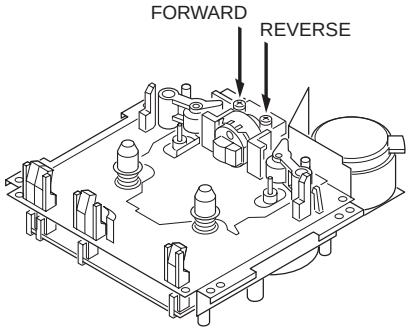

Fig.1

1. Remove the cover deck.
2. Load a test tape (MTT-114N etc. : 10kHz) in the Deck.
3. Press the PLAY (Normal playback) button.
4. Use a + tip screwdriver to turn the screw for normal azimuth adjustment so that the left and right outputs are maximized at the same phase during normal playback. See Fig.1.
5. Press the PLAY (Reverse playback) button.
6. Use a + tip screwdriver to turn the screw for reverse azimuth adjustment so that the left and right outputs are maximized at the same phase during reverse playback.
7. Adjust so that the waveforms for the left and right channels are in alignment.

2. Tape Speed Adjustment

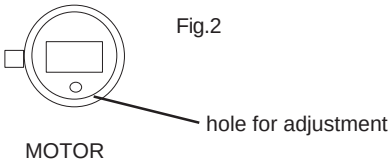

Fig.2

- Connect the Frequency Counter to TAPE OUT.

1. Insert the test tape (MTT-111N, etc.; 3,000Hz) into the DECK.
2. Press the PLAY button. .
3. Adjust a hole on the motor bottom so that a frequency counter reading of 3,000 ±5Hz is obtained.See Fig.2.
4. Press the STOP button, and eject the test tape.

3. Torque Measurement

Item	Take-up Torque	Back tention	Pulley tention
Test Cassette	PLAY : TW2111A (FWD) PLAY : TW2121A (REV) F.FWD / REW : TW2231	PLAY : TW2111A (FWD) PLAY : TW2121A (REV)	Driving power cassette : TW-2412 (PLAY) TW-2422(REV. PLAY)
PLAY/REV.	30 ~ 70 grcm	1 ~ 6 grcm	>80grcm
F.FWD	70 ~ 150 grcm	-	>80grcm
REW	70 ~ 150 grcm	-	

EXPLODED VIEW (CABINET & CHASSIS)

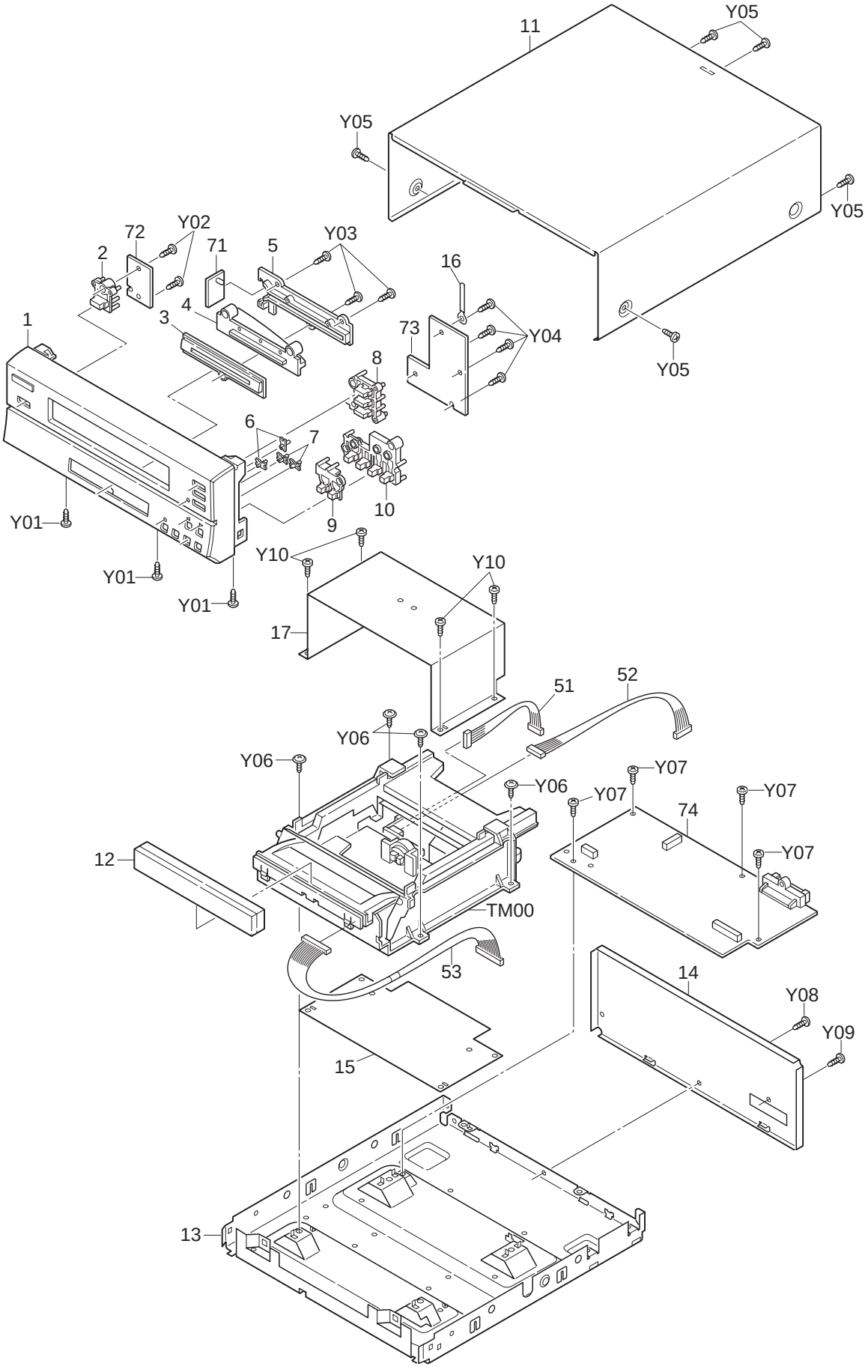

PARTS LIST

PRODUCT SAFETY NOTICE

EACH PRECAUTION IN THIS MANUAL SHOULD BE FOLLOWED DURING SERVICING. COMPONENTS IDENTIFIED WITH THE IEC SYMBOL ⚠ IN THE PARTS LIST AND THE SCHEMATIC DIAGRAM DESIGNATED COMPONENTS IN WHICH SAFETY CAN BE OF SPECIAL SIGNIFICANCE. WHEN REPLACING A COMPONENT IDENTIFIED BY ⚠, USE ONLY THE REPLACEMENT PARTS DESIGNATED, OR PARTS WITH THE SAME RATINGS OF RESISTANCE, WATTAGE OR VOLTAGE THAT ARE DESIGNATED IN THE PARTS LIST IN THIS MANUAL. LEAKAGE-CURRENT OR RESISTANCE MEASUREMENTS MUST BE MADE TO DETERMINE THAT EXPOSED PARTS ARE ACCEPTABLY INSULATED FROM THE SUPPLY CIRCUIT BEFORE RETURNING THE PRODUCT TO THE CUSTOMER.

CAUTION : Regular type resistors and capacitors are not listed. To know those values, refer to the schematic diagram.
Regular type resistors are less than 1/4 W Carbon type and Chip type resistors.
Regular type capacitors are less than 50 V and less than 1000 µF type of Ceramic type, Electrolytic type and Chip type.

PACKING & ACCESSORIES

REF.NO.	PART NO.	DESCRIPTION
	614 318 0791	CARTON CASE,INNER SLEEVE (DC-X8CT/UK)
	614 317 7999	CARTON CASE,INNER SLEEVE (RD-088/XE)
	614 317 8019	CARTON CASE, PRINT INNER (RD-X8/UK-2)
	614 319 0967	CARTON CASE, PRINT INNER (RD-088/SP)
	614 316 2766	CUSHION,FRONT (DC-X8CT/UK)
	614 319 4385	CUSHION,FRONT(RD-088/XE, RD-X8/UK-2 & RD-088/SP)
	614 316 2773	CUSHION,BACK (DC-X8CT/UK)
	614 319 4392	CUSHION,BACK (RD-088/XE, RD-X8/UK-2 & RD-088/SP)
	645 047 3074	POLY SHEET-0650X0400*NC,SET (DC-X8CT/UK & RD-088/SP)
	645 047 3081	POLY SHEET-0650X0400*NC,SET (RD-088/XE)

CABINET & CHASSIS

REF.NO.	PART NO.	DESCRIPTION
1	614 317 7470	ASSY,CABINET,FRONT (DC-X8CT/UK, RD-088/XE & RD-X8/UK-2)
1	614 319 1094	ASSY,CABINET,FRONT(RD-088/SP)
2	614 316 2094	BUTTON,OPEN/CLOSE (DC-X8CT/UK,RD-088/XE & RD-X8/UK-2)
2	614 319 0691	BUTTON,OPEN/CLOSE(RD-088/SP)
3	614 316 2353	DEC,ESC,LIGHTING (DC-X8CT/UK, RD-088/XE & RD-X8/UK-2)
3	614 316 2360	DEC,ESC,LIGHTING(RD-088/SP)
4	614 316 2360	DEC,WINDOW,LIGHTING (DC-X8CT/UK, RD-088/XE & RD-X8/UK-2)
4	614 316 2353	DEC,WINDOW,LIGHTING(RD-088/SP)
5	614 316 2605	REFLECTOR,LED
6	614 302 0530	DEC,WINDOW LED,REC/PAUSE, COMP/REC
7	614 316 2407	DEC,WINDOW,LED,PLAY(ARROW)
8	614 316 2124	BUTTON,DOLBY (DC-X8CT/UK, RD-088/XE & RD-X8/UK-2)
8	614 319 1100	BUTTON,DOLBY(RD-088/SP)
9	614 316 2131	BUTTON,PLAY,PLAY/REV (DC-X8CT/UK, RD-088/XE & RD-X8/UK-2)
9	614 319 0721	BUTTON,PLAY,PLAY/REV(RD-088/SP)
10	614 316 2148	BUTTON,STOP (DC-X8CT/UK, RD-088/XE & RD-X8/UK-2)
10	614 319 0738	BUTTON,STOP(RD-088/SP)
11	614 317 7418	ASSY,CABINET,BENDING
12	614 316 2346	DEC,ESC,TRAY,CASSETTE TRAY (DC-X8CT/UK, RD-088/XE & RD-X8/UK-2)
12	614 319 0813	DEC,ESC,TRAY,CASSETTE TRAY (RD-088/SP)
13	614 317 7494	ASSY,CABINET,BOTTOM
14	614 316 2551	PANEL,REAR (DC-X8CT/UK & RD-X8/UK-2)
14	614 316 8843	PANEL,REAR (RD-088/XE)
14	614 319 1131	PANEL,REAR(RD-088/SP)
15	614 316 7303	SHIELD,BOTTOM
16	614 130 0382	LUG,FRONT PWB
17	614 316 7297	SHIELD,TOP

FIXING PARTS

REF.NO.	PART NO.	DESCRIPTION
Y01	411 021 3503	SCR S-TPG BIN 3X10, FRONT-BOTTOM-FIX
Y02	411 165 3803	SCR S-TPG BIN 2.3X10, FRONT-PWB/EJECT
Y03	411 165 3803	SCR S-TPG BIN 2.3X10, FRONT-REFLECTOR LED
Y04	411 165 3803	SCR S-TPG BIN 2.3X10, FRONT-PWB/BUTTON
Y05	411 098 4205	SCR S-TPG BIN 3X8,CABINET
Y06	411 020 8905	SCR S-TPG BRZ+FLG 3X10, BOTTOM-C/MECHA
Y07	411 021 3503	SCR S-TPG BIN 3X10, BOTTOM-PWB/MAIN
Y08	411 021 3701	SCR S-TPG BIN 3X10,BOTTOM-REAR
Y09	411 021 3701	SCR S-TPG BIN 3X10, REAR-ELECT PART
Y10	411 021 5705	SCR S-TPG BIN 3X6,BOTTOM-SHIELD

ELECTRICAL PARTS

REF.NO.	PART NO.	DESCRIPTION
51	614 316 7440	ASSY,WIRE,TRAY MOTOR
52	614 316 7426	ASSY,WIRE,R/P&E.HEAD LEAD
53	614 316 7433	ASSY,WIRE,MECHA

PARTS LIST

DECK LED P.W..BOARD ASSY

REF.NO.	PART NO.	DESCRIPTION
71	614 315 9322	ASSY,PWB,DECK LED (Only initial)
CN397	614 035 4935	SOCKET,DIP 4P
CN398	614 035 4911	SOCKET,DIP 2P
D3970	408 044 9100	LED HLMP-EL31-SVK00

DECK SW2 P.W.BOARD ASSY

REF.NO.	PART NO.	DESCRIPTION
72	614 316 0410	ASSY,PWB,DECK SW2 (Only initial)
CN399	614 035 4911	SOCKET,DIP 2P
PB304	⚠ 614 316 0472	PWB,DECK SW2,SW
S3990	645 006 5958	SWITCH,PUSH 1P-1T
or	614 220 5471	SWITCH,TACT
or	614 240 1002	SWITCH,TACT

DECK SWITCH P.W.BOARD ASSY

REF.NO.	PART NO.	DESCRIPTION
73	614 315 8493	ASSY,PWB,DECK SW (Only initial)
CN341	645 012 2743	SOCKET,DIP 9P
CN342	614 035 4935	SOCKET,DIP 4P
CN343	614 318 1613	ASSY,WIRE
D3331	408 032 5404	LED SLP-9118C-51H-S-T1
D3332	408 037 4204	LED SLP-3118B-51HAB-T1
D3333	408 037 4204	LED SLP-3118B-51HAB-T1
D3334	408 032 5404	LED SLP-9118C-51H-S-T1
S3331	645 006 5958	SWITCH,PUSH 1P-1T
or	614 220 5471	SWITCH,TACT
or	614 240 1002	SWITCH,TACT
S3332	645 006 5958	SWITCH,PUSH 1P-1T
or	614 220 5471	SWITCH,TACT
or	614 240 1002	SWITCH,TACT
S3333	645 006 5958	SWITCH,PUSH 1P-1T
or	614 220 5471	SWITCH,TACT
or	614 240 1002	SWITCH,TACT
S3334	645 006 5958	SWITCH,PUSH 1P-1T
or	614 220 5471	SWITCH,TACT
or	614 240 1002	SWITCH,TACT
S3335	645 006 5958	SWITCH,PUSH 1P-1T
or	614 220 5471	SWITCH,TACT
or	614 240 1002	SWITCH,TACT
S3336	645 006 5958	SWITCH,PUSH 1P-1T
or	614 220 5471	SWITCH,TACT
or	614 240 1002	SWITCH,TACT
S3337	645 006 5958	SWITCH,PUSH 1P-1T
or	614 220 5471	SWITCH,TACT
or	614 240 1002	SWITCH,TACT
S3338	645 006 5958	SWITCH,PUSH 1P-1T
or	614 220 5471	SWITCH,TACT
or	614 240 1002	SWITCH,TACT
S3339	645 006 5958	SWITCH,PUSH 1P-1T
or	614 220 5471	SWITCH,TACT
or	614 240 1002	SWITCH,TACT

DECK MAIN P.W.BOARD ASSY

REF.NO.	PART NO.	DESCRIPTION
74	614 315 8486	ASSY,PWB,DECK LOG.W/DOLBY, DECK MAIN (Only initial)
C3606	403 058 1508	POLYESTER 1500P K 50V
C3607	403 058 3601	POLYESTER 0.015U K 50V
CN301	645 045 9511	SOCKET,SYSTEM 19P
CN311	614 310 2540	PLUG,13P
or	645 006 0885	PLUG,13P
CN312	614 310 2472	PLUG,6P
or	645 005 8127	PLUG,6P
CN331	614 310 2502	PLUG,9P
or	645 005 8141	PLUG,9P
CN371	614 310 2496	PLUG,8P
or	645 005 8134	PLUG,8P
CN372	614 310 2441	PLUG,3P
or	645 005 7373	PLUG,3P
D3302	407 012 4406	DIODE 1SS133
D3500	407 012 4406	DIODE 1SS133
D3501	407 012 4406	DIODE 1SS133
D3502	407 012 4406	DIODE 1SS133
D3550	407 012 4406	DIODE 1SS133
D3551	407 012 4406	DIODE 1SS133
D3552	407 012 4406	DIODE 1SS133
D3601	407 012 4406	DIODE 1SS133
D3602	407 012 4406	DIODE 1SS133
D3603	407 063 9207	ZENER DIODE MTZJ7.5B
D3621	⚠ 407 004 9709	DIODE DSK10C
D3901	407 099 5303	ZENER DIODE MTZJ5.6B
IC331	410 409 8802	IC M38503M4H 378FP
IC332	409 471 0302	IC BMR-0301I
IC351	409 294 6307	IC CXA1552P
IC361	409 408 1303	IC LB1641L
IC362	409 241 5308	IC BA3126N
IC371	409 486 3503	IC NJM4580L
IC373	409 426 1903	IC KIA4558F
L3501	614 270 4295	FILTER,LC
L3551	614 270 4295	FILTER,LC
L3601	645 045 6947	TRANS,OSC,85KHZ
L3701	614 029 3142	MX COIL
or	614 029 3937	MX COIL
L3801	614 029 3142	MX COIL
or	614 029 3937	MX COIL
L3901	645 001 4581	INDUCTOR,100U K
or	645 031 7842	INDUCTOR,100U K
L3902	645 004 0511	INDUCTOR,270U J
PR360	⚠ 645 042 2539	PROTECTOR,0.4A 125V
or	⚠ 645 014 2499	PROTECTOR,0.4A 125V
Q3302	405 143 0007	TR KRC107M
or	405 000 3806	TR DTC114YS
Q3303	405 143 0007	TR KRC107M
or	405 000 3806	TR DTC114YS
Q3304	405 143 0007	TR KRC107M
or	405 000 3806	TR DTC114YS
Q3309	405 143 0007	TR KRC107M
or	405 000 3806	TR DTC114YS
Q3501	405 143 8706	TR KTC3199-GR
or	405 017 9600	TR 2SC3330-T
or	405 017 9709	TR 2SC3330-U
or	405 011 8500	TR 2SC1740S-R
or	405 011 8609	TR 2SC1740S-S
Q3502	405 151 4400	TR KTD1303
or	405 021 0204	TR 2SD1012-F-SPA
or	405 021 0600	TR 2SD1012-G-SPA
or	405 033 6706	TR 2SD1468S-R
or	405 033 6805	TR 2SD1468S-S
Q3503	405 143 8706	TR KTC3199-GR
or	405 017 9600	TR 2SC3330-T
or	405 017 9709	TR 2SC3330-U
or	405 011 8500	TR 2SC1740S-R
or	405 011 8609	TR 2SC1740S-S
Q3551	405 143 8706	TR KTC3199-GR
or	405 017 9600	TR 2SC3330-T
or	405 017 9709	TR 2SC3330-U
or	405 011 8500	TR 2SC1740S-R
or	405 011 8609	TR 2SC1740S-S

PARTS LIST

REF.NO.	PART NO.	DESCRIPTION
Q3552	405 151 4400	TR KTD1303
or	405 021 0204	TR 2SD1012-F-SPA
or	405 021 0600	TR 2SD1012-G-SPA
or	405 033 6706	TR 2SD1468S-R
or	405 033 6805	TR 2SD1468S-S
Q3601	405 141 3703	TR KTA1271-Y
or	405 006 3909	TR 2SA952-K
or	405 006 4005	TR 2SA952-L
Q3602	405 143 8706	TR KTC3199-GR
or	405 017 9600	TR 2SC3330-T
or	405 017 9709	TR 2SC3330-U
or	405 011 8500	TR 2SC1740S-R
or	405 011 8609	TR 2SC1740S-S
Q3603	405 143 8706	TR KTC3199-GR
or	405 017 9600	TR 2SC3330-T
or	405 017 9709	TR 2SC3330-U
or	405 011 8500	TR 2SC1740S-R
or	405 011 8609	TR 2SC1740S-S
Q3604	405 143 8706	TR KTC3199-GR
or	405 017 9600	TR 2SC3330-T
or	405 017 9709	TR 2SC3330-U
or	405 011 8500	TR 2SC1740S-R
or	405 011 8609	TR 2SC1740S-S
Q3605	405 151 4905	TR KTC3200-GR
or	405 151 5001	TR KTC3200-BL
Q3607	405 143 0007	TR KRC107M
or	405 000 3806	TR DTC114YS
Q3621	405 141 3703	TR KTA1271-Y
or	405 006 3909	TR 2SA952-K
or	405 006 4005	TR 2SA952-L
Q3622	405 141 3703	TR KTA1271-Y
or	405 006 3909	TR 2SA952-K
or	405 006 4005	TR 2SA952-L
Q3701	405 143 8706	TR KTC3199-GR
or	405 017 9600	TR 2SC3330-T
or	405 017 9709	TR 2SC3330-U
or	405 011 8500	TR 2SC1740S-
or	405 011 8609	TR 2SC1740S-S
Q3702	405 151 4400	TR KTD1303
or	405 021 0204	TR 2SD1012-F-SPA
or	405 021 0600	TR 2SD1012-G-SPA
or	405 033 6706	TR 2SD1468S-R
or	405 033 6805	TR 2SD1468S-S
Q3703	405 143 0007	TR KRC107M
or	405 000 3806	TR DTC114YS
Q3704	405 143 0007	TR KRC107M
or	405 000 3806	TR DTC114YS
Q3705	405 143 8706	TR KTC3199-GR
or	405 017 9600	TR 2SC3330-T
or	405 017 9709	TR 2SC3330-U
or	405 011 8500	TR 2SC1740S-R
or	405 011 8609	TR 2SC1740S-S
Q3706	405 149 6003	TR 2SJ498
Q3801	405 143 8706	TR KTC3199-GR
or	405 017 9600	TR 2SC3330-T
or	405 017 9709	TR 2SC3330-U
or	405 011 8500	TR 2SC1740S-R
or	405 011 8609	TR 2SC1740S-S
Q3802	405 151 4400	TR KTD1303
or	405 021 0204	TR 2SD1012-F-SPA
or	405 021 0600	TR 2SD1012-G-SPA
or	405 033 6706	TR 2SD1468S-R
or	405 033 6805	TR 2SD1468S-S
Q3803	405 143 0007	TR KRC107M
or	405 000 3806	TR DTC114YS
Q3804	405 143 0007	TR KRC107M
or	405 000 3806	TR DTC114YS

REF.NO.	PART NO.	DESCRIPTION
Q3805	405 143 8706	TR KTC3199-GR
or	405 017 9600	TR 2SC3330-T
or	405 017 9709	TR 2SC3330-U
or	405 011 8500	TR 2SC1740S-R
or	405 011 8609	TR 2SC1740S-S
Q3806	405 149 6003	TR 2SJ498
Q3901	405 146 1209	TR KRC104M
or	405 000 6104	TR DTC144ES
Q3902	405 143 8904	TR KRA106M
or	405 075 8102	TR DTA143ZS
Q3903	405 143 8904	TR KRA106M
or	405 075 8102	TR DTA143ZS
Q3904	405 141 3109	TR KTC3203-Y
or	405 024 9907	TR 2SD734-F
or	405 025 0200	TR 2SD734-G
R3633	⚠ 402 083 3600	RESISTOR 15 J- 2W
VR350	645 003 5531	VR,SEMI,10K N
VR371	645 003 5586	VR,SEMI,22K N
VR372	645 003 5531	VR,SEMI,10K N
VR373	645 003 5548	VR,SEMI,100K N
VR381	645 003 5586	VR,SEMI,22K N
VR382	645 003 5531	VR,SEMI,10K N
VR383	645 003 5548	VR,SEMI,100K N
X3301	614 215 5561	RESONATOR,CERAM
or	645 013 7532	OSC,CERAMIC 4.19MHZ

EXPLODED VIEW (TAPE MECHANISM)

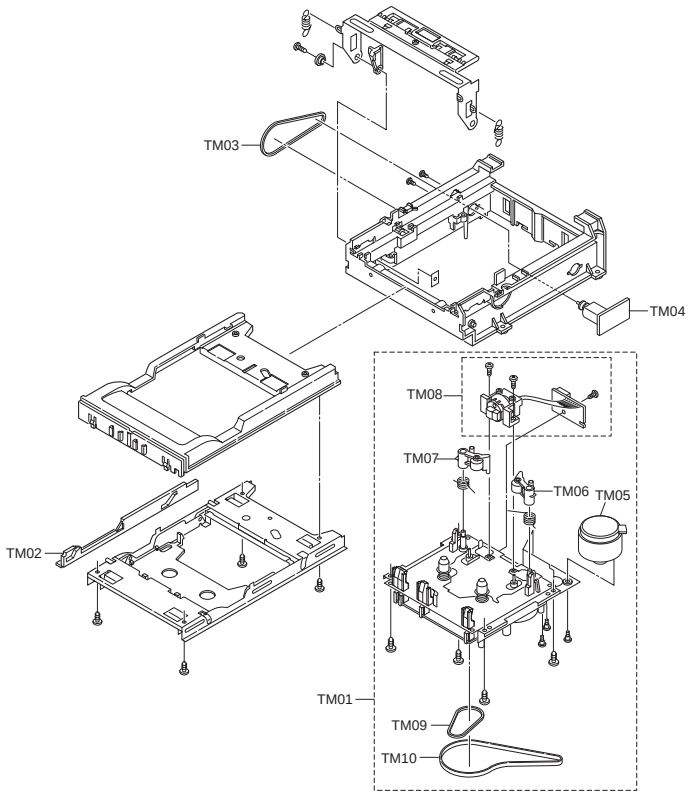

TAPE MECHANISM (TM-X8SM-SH)

REF.NO.	PART NO.	DESCRIPTION
TM00	614 316 7822	ASSY,MECHA,TM-X8SM-SH
TM01	645 047 2930	ASSY,MECHA ADR2174TB3
TM02	645 047 1032	GEAR LUCK
TM03	645 047 1070	BELT D49.2
TM04	645 047 0981	ASSY,MOTOR PCB
TM05	645 047 2633	DC MOTOR ASSY
TM06	645 047 2596	PINCH ROLLER ASSY (R)
TM07	645 047 2589	PINCH ROLLER ASSY (F)
TM08	645 047 2626	HEAD ASSY

IC BLOCK DIAGRAM & DESCRIPTION

IC351 CXA1552P
(Dolby B type Noise Reduction System)

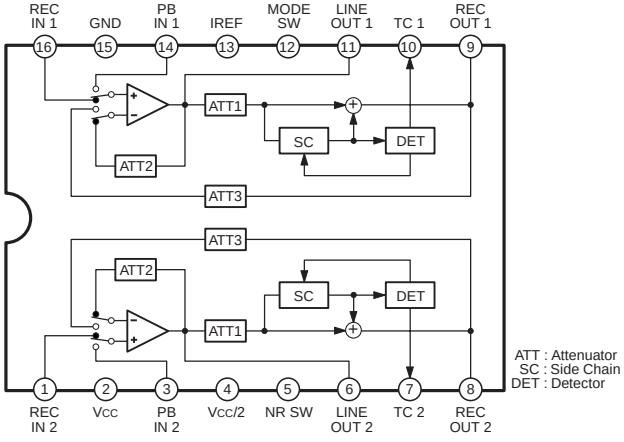

IC362 BA3126N (2-channel head switch for radio cassette recorders)

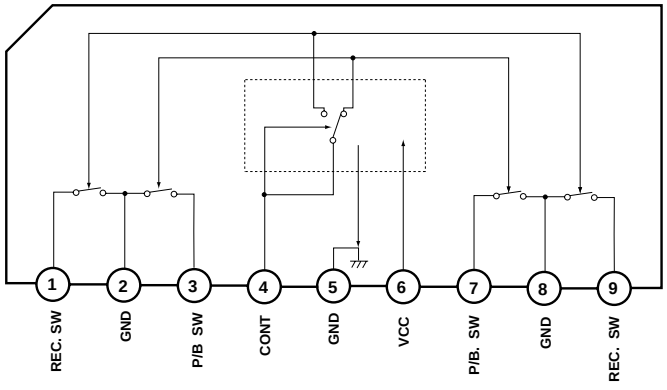

IC451 KIA4558S
(Dual Low Noise Operational Amplifier)

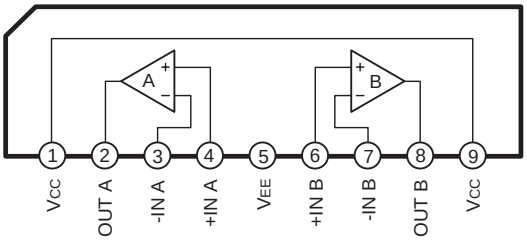

IC371 KIA4580L
(Dual Operation Amplifier)

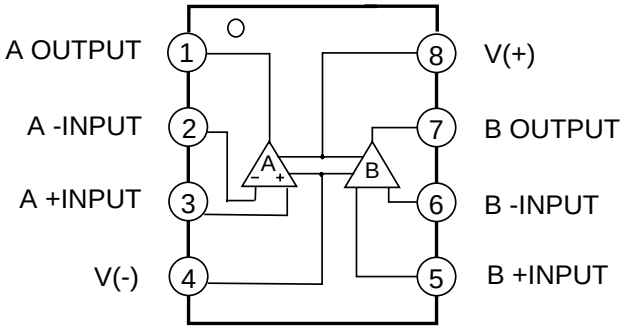

IC BLOCK DIAGRAM & DESCRIPTION

IC331 M38503M4 (Syngle-Chip 8-Bit CMOS Microcomputer)

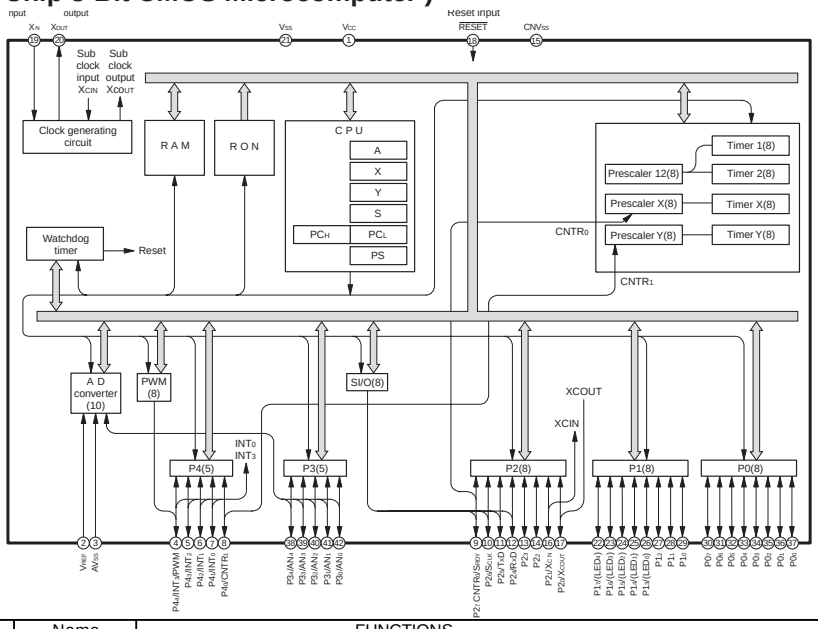

No.	Pin	Name	FUNCTIONS	Function ex except a port function
1	VCC	Power Source	Apply voltage of 2.7V-5.5V to VCC, and 0V to VSS.	
2	VRFF			
3	AVSS			
4	P44/INT3/PWN	I/O port P4	● 8-bit CMOS I/O port with the same function as port P0.	● Interrupt input pins ● PWM output pin
5	P43/INT2	I/O port P4	● CMOS compatible input level. ● CMOS 3-state output structure.	● Interrupt input pins
6	P42/INT1	I/O port P4		
7	P41/INT0	I/O port P4		
8	P40/CNTR1	I/O port P4		● Timer Y function pin
9	P27/CNTR0/ $\overline{\text{SRDY}}$	I/O port P2	● 8-bit CMOS I/O port. ● I/O direction register allows each pin to be individually programmed as either input or output.	● Serial I/O function pin/ Timer X function pin
10	P26/SCLK	I/O port P2		● Serial I/O function pin
11	P25/TXD	I/O port P2		
12	P24/RXD	I/O port P2	● CMOS compatible input level.	
13	P23	I/O port P2	● P20,P21,P24 to P27: CMOS3-state output structure.	
14	P22	I/O port P2	● P22,P23,N-channel open-drain structure.	
15	CNVSS	CNVSS Input	● This pin controls the operation mode of the chip. ● Normally connected to VSS.	
16	P21/XCIN	I/O port P2	● 8-bit CMOS I/O port. ● I/O direction register allows each pin to be individually programmed as either input or output. ● CMOS compatible input level. ● P20,P21,P24 to P27: CMOS3-state output structure. ● P22,P23,N-channel open-drain structure.	● Sub-clock generating circuit I/O pins(connect a resonator)
17	P20/XOUT	I/O port P2		
18	$\overline{\text{RESET}}$	Reset Input	● Reset input pin for active "L".	
19	XIN	Clock Input	● Input and output pins for the clock generating circuit. ● Connect a ceramic resonator or quartz-crystal oscillator between the XIN and XOUT pins to set the oscillation frequency. ● When an external clock is used, connect the clock source to the Xin pin and leave the Xout pin open.	
20	XOUT	Clock Output		
21	VSS	Power Source	● Apply voltage of 2.7V-5.5V to VCC, and 0V to VSS.	
22	P17	I/O port P1	● 8-bit CMOS I/O port. ● I/O direction register allows each pin to be individually programmed as either input or output. ● CMOS compatible input level. ● CMOS 3-state output structure. ● P13 to P17(5 bits) are enabled to output large current for LED drive.	
23	P16			
24	P15			
25	P14			
26	P13			
27	P12			
28	P11			
29	P10			
30	P07	I/O port P0		
31	P06			
32	P05			
33	P04			
34	P03			
35	P02			
36	P01			
37	P00			
38	P34/AN4	I/O port P3	● 8-bit CMOS I/O port with the same function as port P0. ● CMOS compatible input level. ● CMOS 3-state output structure.	● A-D converter input pin
39	P33/AN3			
40	P32/AN2			
41	P31/AN1			
42	P30/AN0			

WIRING CONNECTION

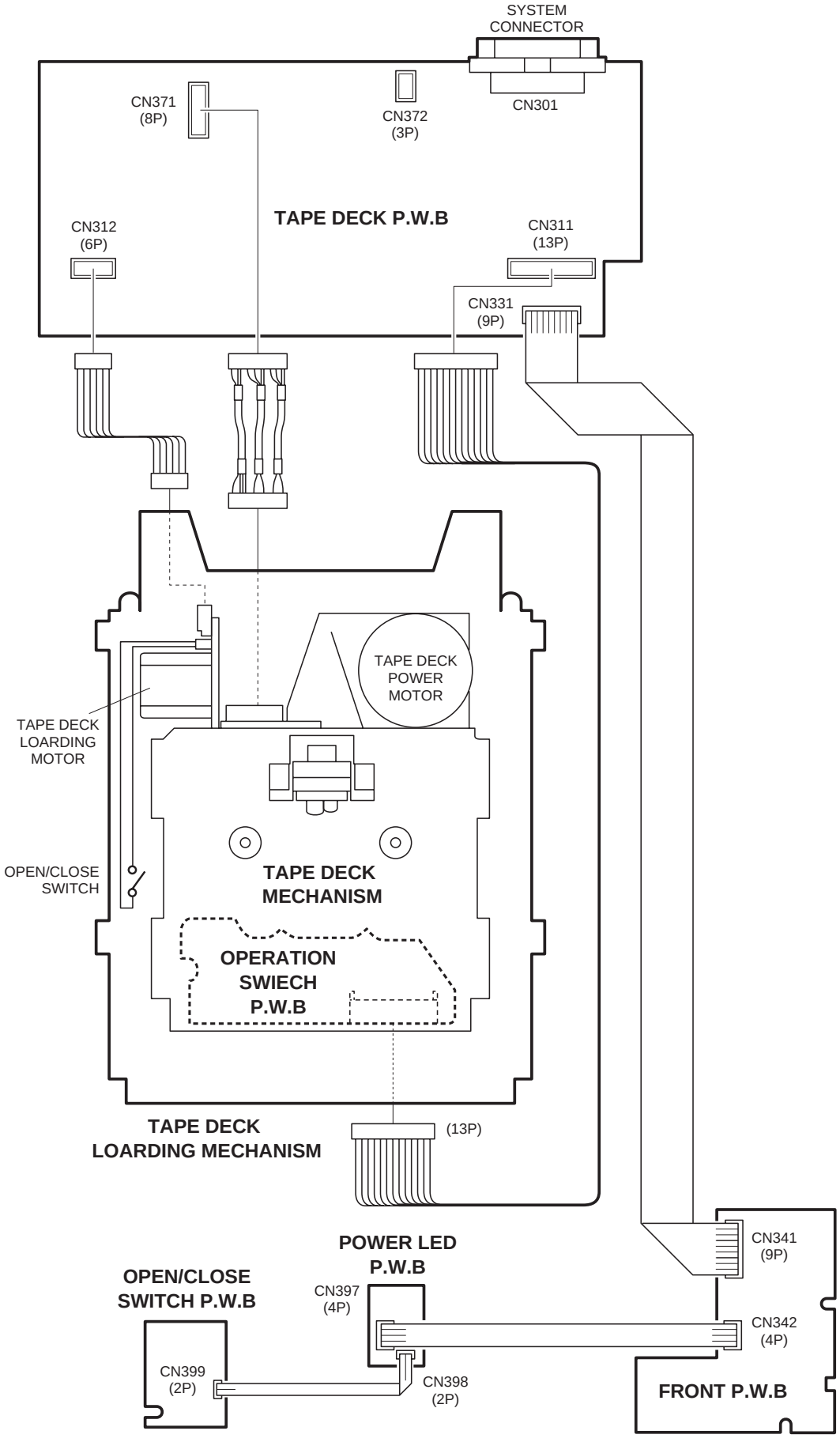

MEMO

SCHEMATIC DIAGRAM (TAPE DECK)

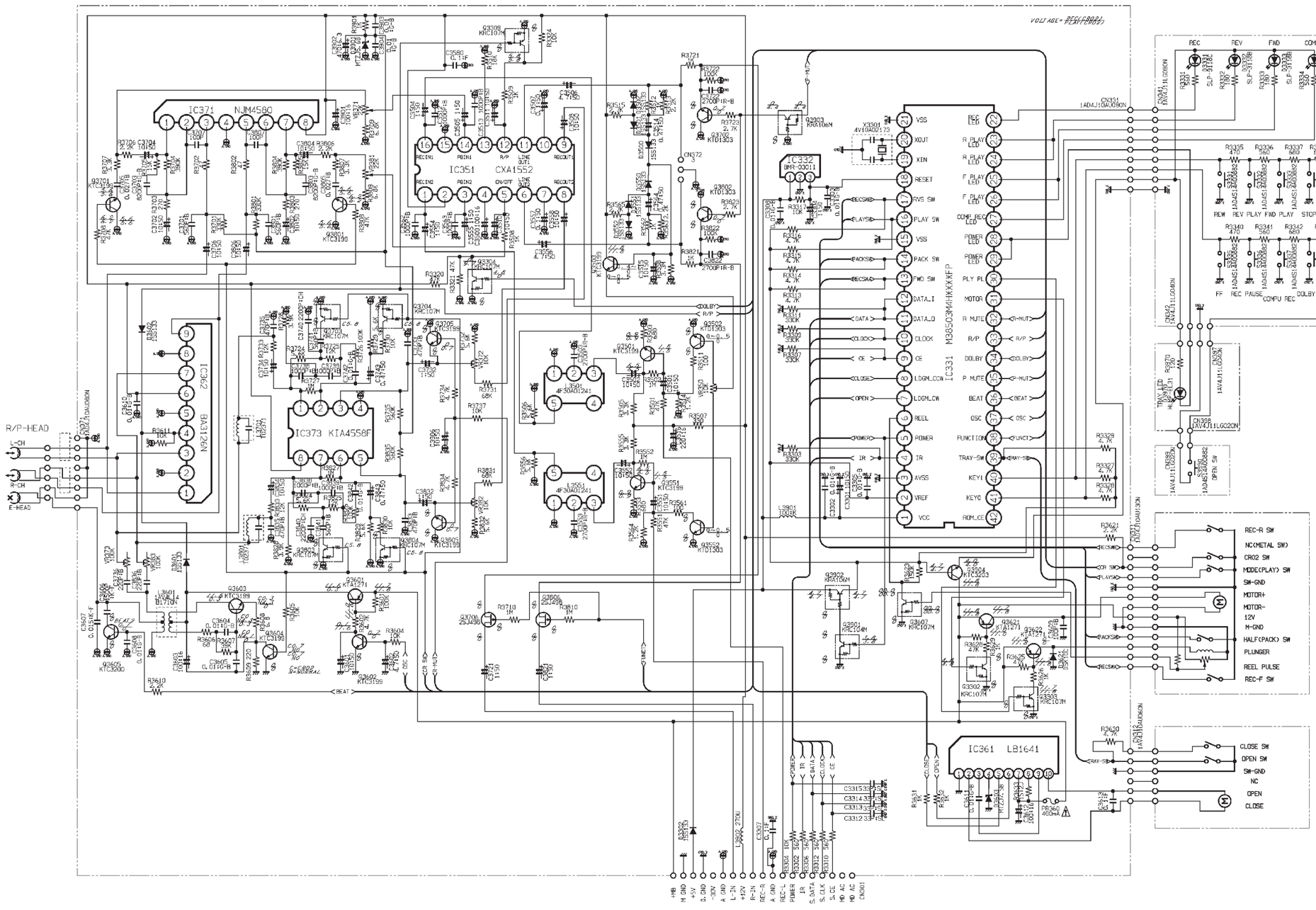

IC331	PLAY	REC	OTHER
1	4.7	4.7	
2	4.5	4.5	
3	0	0	
4	3.8	3.8	
5	3.8	3.8	
6	-	-	
7	4.6	4.6	
8	4.6	4.6	
9	-	-	
10	4.6	4.6	
11	0	0	
12	0	0	
13	0	0	
14	0	0	
15	0	0	
16	0	0	
17	0	0	
18	4.7	4.7	
19	1.9	2.0	
20	2.2	2.2	
21	0	0	
22	2.8	0	
23	2.7	2.7	0(FWD)
24	2.7	2.7	0(FWD)
25	0	0	2.7(REV)
26	0	0	2.7(REV)
27	2.8	2.8	0(C-REC)
28	0	0	
29	0	0	
30	0	0	
31	0	0	
32	4.6	0	
33	0	4.6	
34	0	0	
35	0	4.4	
36	0	0	4.6(BEAT2)
37	0	0	
38	0	0	
39	2.3	2.3	
40	4.7	4.7	
41	4.7	4.7	
42	0	0	

IC362	PLAY	REC	OTHER
1	0	0	
2	0	0	
3	0	0	
4	0.4	11.4	
5	0	0	
6	11.6	11.6	
7	0	0	
8	0	0	
9	0	0	

IC371	PLAY	REC	OTHER
1	5.6	5.6	
2	5.6	5.6	
3	5.5	5.5	
4	0	0	
5	5.5	5.5	
6	5.6	5.6	
7	5.6	5.6	
8	11.8	11.8	

IC351	PLAY	REC	OTHER
1	5.7	5.7	
2	11.8	11.8	
3	5.7	5.7	
4	5.7	5.7	
5	5.7	5.7	(CD-ON)
6	5.8	5.7	
7	0.4	0.4	
8	5.8	5.7	
9	5.8	5.7	
10	0.4	0.4	
11	5.8	5.7	
12	11.4	0	
13	1.2	1.2	
14	5.7	5.7	
15	0	0	
16	5.7	5.7	

IC373	PLAY	REC	OTHER
1	5.6	5.6	
2	5.6	5.6	
3	5.4	5.4	
4	0	0	
5	5.4	5.4	
6	5.6	5.6	
7	5.6	5.6	
8	11.8	11.8	

IC361	PLAY	REC	OTHER
1	0	0	
2	0.5	0.5	
3	0.7	0.7	
4	0.4	4.4	
5	3.1	3.1	
6	3.1	3.1	
7	12.0	12.0	
8	12.0	12.0	
9	0.7	0.7	
10	0.5	0.5	

PRODUCT SAFETY NOTICE

Each precaution in this manual should be followed during servicing. Components identified with the IEC symbol ⚠ in the parts list and the schematic diagram designated components in which safety can be of special significance. When replacing a component identified by ⚠ , use only the replacement parts designated, or parts with the same ratings of resistance, wattage or voltage that are designated in the parts list in this manual. Leakage-current or resistance measurements must be made to determine that exposed parts are acceptably insulated from the supply circuit before returning the product to the customer.

This is a basic schematic diagram.

REPLACEMENT AND LUBRICATION OF THE MD DOOR

How to remove the MD door

1. Pinch a spring coil (front right side) with a pair of tweezers, and take ot off from a hole of MD door with care. Pay attention that the spring is not to be exhausted when taking off from the hole of MD door.
2. Remove a MD door and a shaft.

MD door installation method

1. Put molykote (EM-30LG) on the door contacted part.
2. Install the shaft into ditches of MD door with care as shown.
3. Pinch the spring coil with a pair of tweezers, and hang it on the holes of the MD door.
4. Apply glue (TB1401B) on the hook as shown when the spring coil has been replaced with new one.

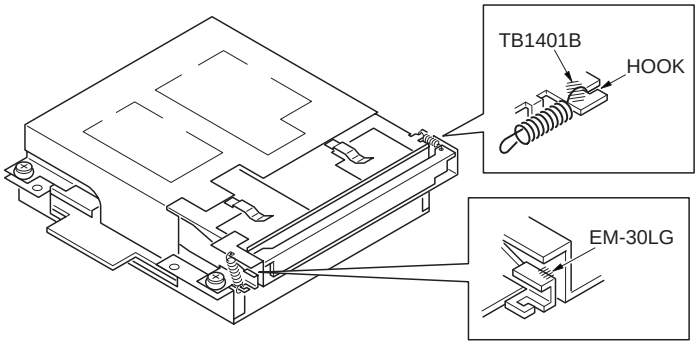

IC BLOCK DIAGRAM & DESCRIPTION

IC503 TC74HCU04AP (HEX INVERTER)

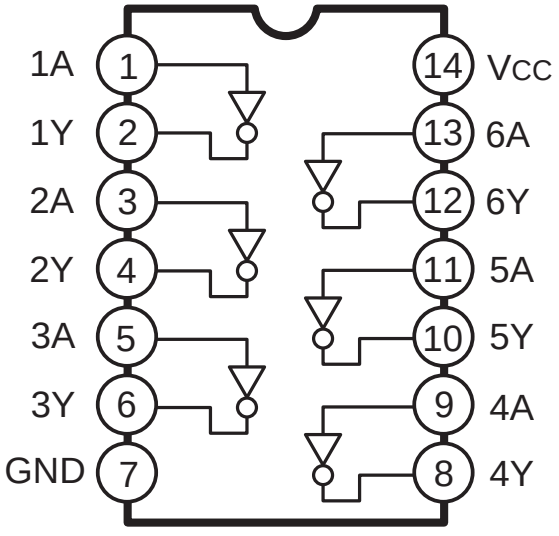

IC532 TC74ACT32FT (Serial EEPROM)

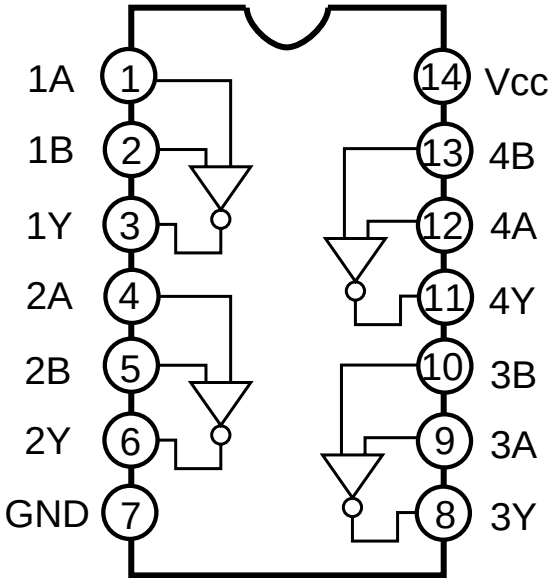

IC BLOCK DIAGRAM & DESCRIPTION

IC571 BA3314F (Dula Preamplifier with ALC Detector)

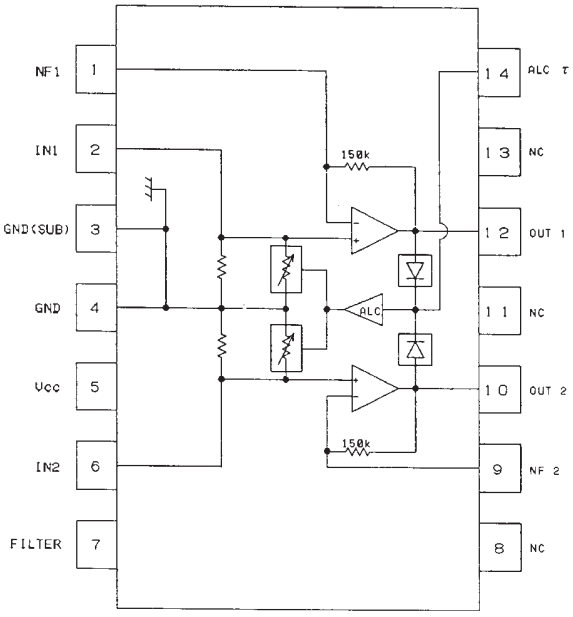

IC573 BU4066BCF (Quad Analog Switch)

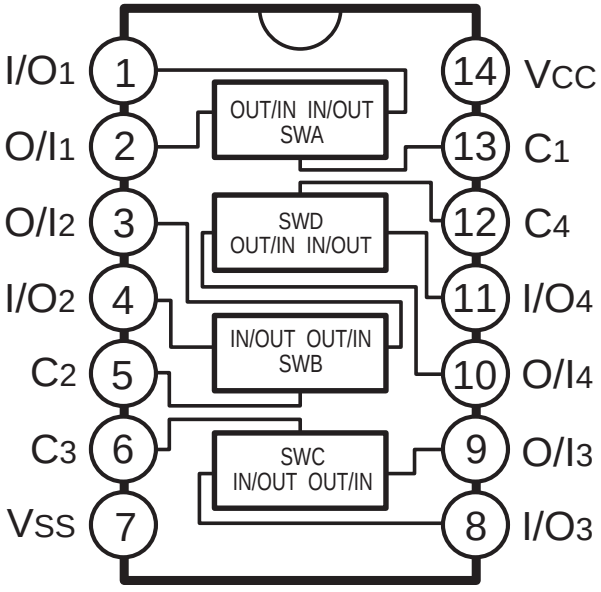

IC591 KIA7805API (REGULATOR)

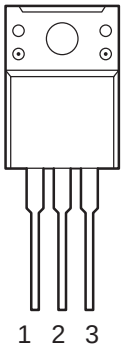

1. INPUT
2. COMMON
3. OUTPUT

IC592 & 594 S-81233SGUP-DQF (REGULATOR)

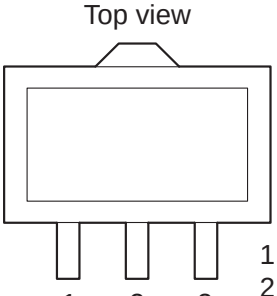

1. GND
2. VIN
3. VOUT

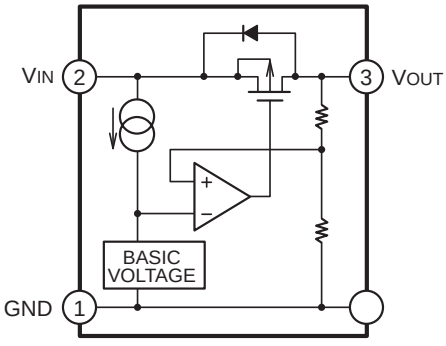

IC533 & 593 BNR-0301I (SYSTEM RESET)

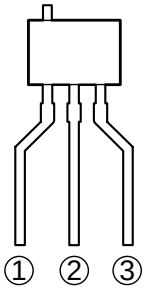

① VCC
② GND
③ V0

IC BLOCK DIAGRAM & DESCRIPTION

IC531 M38197MAA-636FP (Single Chip 8-bit C Mos)

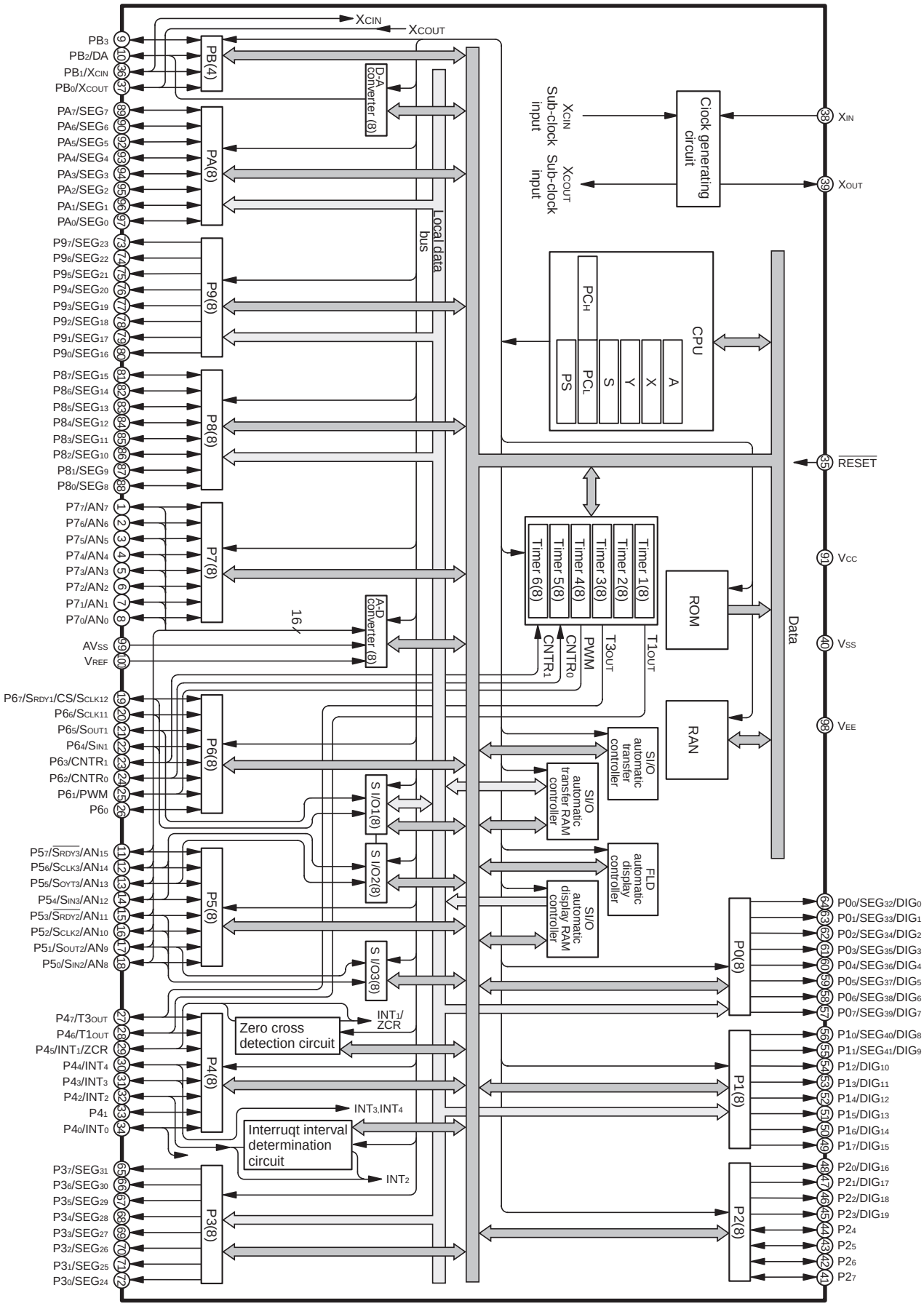

IC BLOCK DIAGRAM & DESCRIPTION

IC531 M38197MAA-636FP (Single Chip 8-bit C Mos)

Pin	Name	Function
1	$P7_7/AN_7$	
2	$P7_6/AN_6$	
3	$P7_5/AN_5$	8-bit C MOS I/O port with the same function
4	$P7_4/AN_4$	as ports $P2_4$ - $P2_7$
5	$P7_3/AN_3$	C MOS compatible input level
6	$P7_2/AN_2$	C MOS 3-state output
7	$P7_1/AN_1$	
8	$P7_0/AN_0$	
9	PB_3	4-bit C MOS I/O port with the same function as ports $P2_4$ - $P2_7$
10	PB_2/DA	C MOS compatible input level C MOS 3-state output
11	$P5_7/S_{RDY3}/AN_{15}$	
12	$P5_6/S_{CLK3}/AN_{14}$	
13	$P5_5/S_{OUT3}/AN_{13}$	
14	$P5_4/S_{IN3}/AN_{12}$	
15	$P5_3/S_{\overline{RDY2}}/AN_{11}$	8-bit C MOS I/O port with the same function
16	$P5_2/S_{CLK2}/AN_{10}$	as ports $P2_4$ - $P2_7$
17	$P5_1/S_{OUT2}/AN_9$	C MOS compatible input level
18	$P5_0/S_{IN2}/AN_8$	C MOS 3-state output
19	$P6_7/S_{\overline{RDY1}}/\overline{CS}/S_{CLK12}$	
20	$P6_6/S_{CLK11}$	
21	$P6_5/S_{OUT1}$	
22	$P6_4/S_{IN1}$	
23	$P6_3/CNTR_1$	
24	$P6_2/CNTR_0$	
25	$P6_1/PWM$	
26	$P6_0$	
27	$P4_7/T3_{OUT}$	6-bit C MOS I/O port with the same function as ports $P2_4$ - $P2_7$
28	$P4_6/T1_{OUT}$	C MOS compatible input level C MOS 3-state output
29	$P4_5/INT_1/ZCR$	2-bit input port C MOS compatible input level
30	$P4_4/INT_4$	6-bit C MOS I/O port with the same function
31	$P4_3/INT_3$	as ports $P2_4$ - $P2_7$
32	$P4_2/INT_2$	C MOS compatible input level
33	$P4_1$	C MOS 3-state output
34	$P4_0/INT_0$	2-bit input port C MOS compatible input level
35	$\overline{RESET}$	Reset input pin for active "L"
36	PB_1/X_{CIN}	4-bit C MOS I/O port with the same function as ports $P2_4$ - $P2_7$
37	PB_0/X_{OUT}	C MOS compatible input level C MOS 3-state output
38 39	X_{IN} X_{OUT}	Input and output pins for the main clock generating circuit. Feedback resistor is built in between XIN pin and Xout pin. Connect a ceramic resonator or a quartz-crystal oscillator between the X_{IN} pin and X_{OUT} pin to set oscillation frequency. If an external clock is used, connect the clock source to the X_{IN} pin and leave the X_{OUT} pin open. This clock is used as the oscillating source of system clock.
40	V_{SS}	Apply voltage of 0V to V_{SS}
41	$P2_7$	4-bit I/O port
42	$P2_6$	I/O direction register allows each pin to individually programmed as either input or output.
43	$P2_5$	At reset this port is set to input mode.
44	$P2_4$	TTL input level
		C MOS 3-state output

Pin	Name	Function
45	$P2_3/DIG_{19}$	
46	$P2_2/DIG_{18}$	4-bit output port with the same function as port P0
47	$P2_1/DIG_{17}$	
48	$P2_0/DIG_{16}$	
49	$P1_7/DIG_{15}$	
50	$P1_6/DIG_{14}$	
51	$P1_5/DIG_{13}$	
52	$P1_4/DIG_{12}$	8-bit output port with the same function as port P0
53	$P1_3/DIG_{11}$	
54	$P1_2/DIG_{10}$	
55	$P1_1/SEG_{41}/DIG_9$	
56	$P1_0/SEG_{40}/DIG_8$	
57	$P0_7/SEG_{39}/DIG_7$	
58	$P0_6/SEG_{38}/DIG_6$	8-bit output port
59	$P0_5/SEG_{37}/DIG_5$	This port builds in pull-down resistor between
60	$P0_4/SEG_{36}/DIG_4$	port P0 and the V_{EE} pin
61	$P0_3/SEG_{35}/DIG_3$	At reset this port is set to V_{EE} level
62	$P0_2/SEG_{34}/DIG_2$	The high-breakdown-voltage P-channel open-
63	$P0_1/SEG_{33}/DIG_1$	drain
64	$P0_0/SEG_{32}/DIG_0$	
65	$P3_7/SEG_{31}$	
66	$P3_6/SEG_{30}$	
67	$P3_5/SEG_{29}$	
68	$P3_4/SEG_{28}$	8-bit output port with the same function as port P0
69	$P3_3/SEG_{27}$	
70	$P3_2/SEG_{26}$	
71	$P3_1/SEG_{25}$	
72	$P3_0/SEG_{24}$	
73	$P9_7/SEG_{23}$	
74	$P9_6/SEG_{22}$	
75	$P9_5/SEG_{21}$	
76	$P9_4/SEG_{20}$	8-bit output port with the same function as port P0
77	$P9_3/SEG_{19}$	
78	$P9_2/SEG_{18}$	
79	$P9_1/SEG_{17}$	
80	$P9_0/SEG_{16}$	
81	$P8_7/SEG_{15}$	
82	$P8_6/SEG_{14}$	
83	$P8_5/SEG_{13}$	8-bit I/O port with the same function as ports
84	$P8_4/SEG_{12}$	$P2_4$-$P2_7$
85	$P8_3/SEG_{11}$	C MOS compatible input level
86	$P8_2/SEG_{10}$	The high-breakdown-voltage P-channel open-
87	$P8_1/SEG_9$	drain
88	$P8_0/SEG_8$	
89	PA_7/SEG_7	
90	PA_6/SEG_6	
91	V_{CC}	Apply voltage of 4.0 to 5.5V to V_{CC}
92	PA_5/SEG_5	8-bit I/O port with the same function as ports
93	PA_4/SEG_4	$P2_4$-$P2_7$
94	PA_3/SEG_3	C MOS compatible input level
95	PA_2/SEG_2	The high-breakdown-voltage P-channel open-
96	PA_1/SEG_1	drain
97	PA_0/SEG_0	
98	V_{EE}	Applies voltage supplied to pull-down resistors of ports P0, P1, $P2_0$-$P2_3$, P3 and P9
99	AV_{SS}	GND input pin for A-D converter and D-A converter Connect AV_{SS} to V_{SS}
100	V_{REF}	Reference voltage input pin for A-D converter and D-A converter

EXPLODED VIEW (CABINET,CHASSIS & MD MECHANISM)

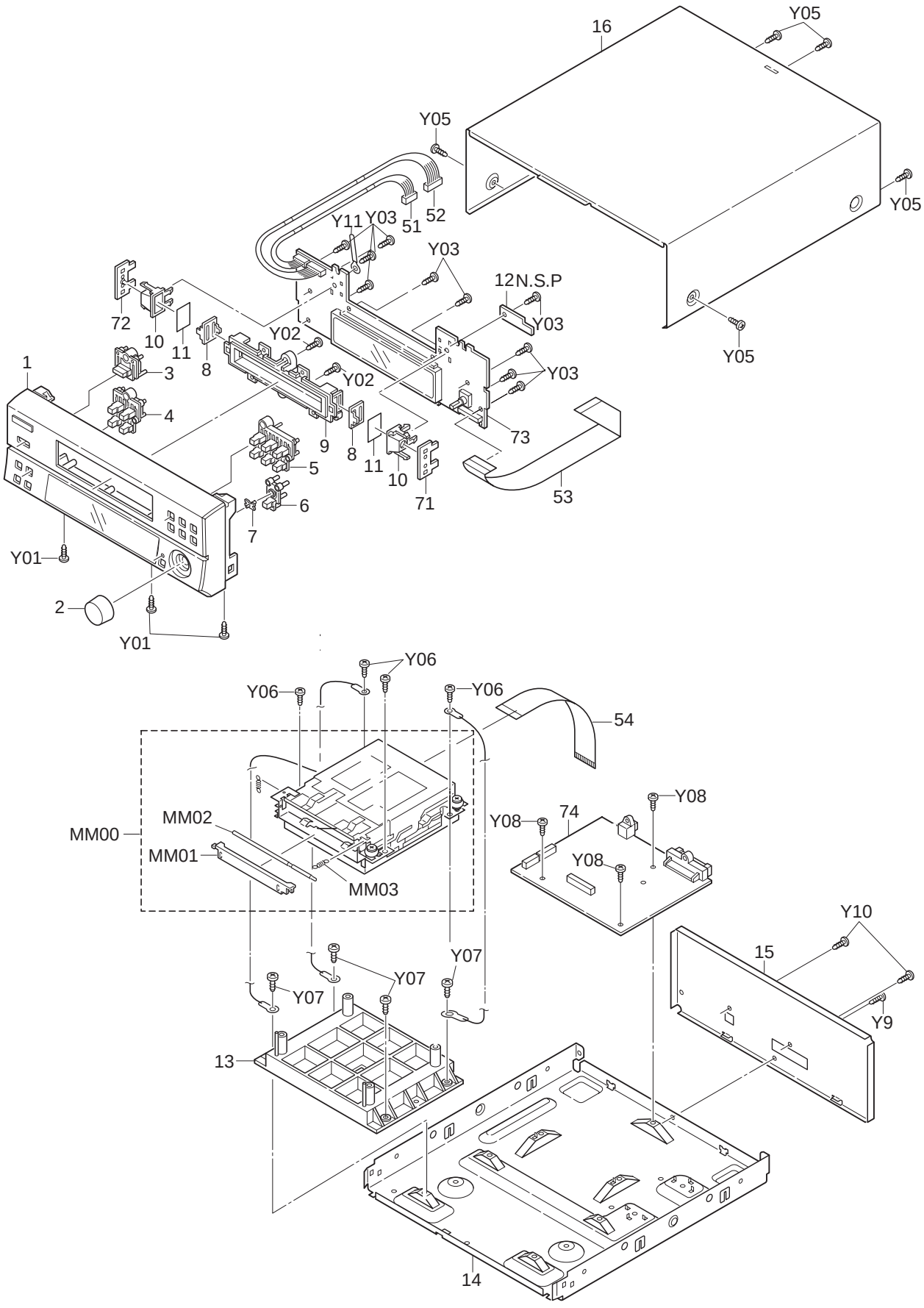

N.S.P : Not supplied as service parts.

PARTS LIST

PRODUCT SAFETY NOTICE

EACH PRECAUTION IN THIS MANUAL SHOULD BE FOLLOWED DURING SERVICING. COMPONENTS IDENTIFIED WITH THE IEC SYMBOL ⚠ IN THE PARTS LIST AND THE SCHEMATIC DIAGRAM DESIGNATED COMPONENTS IN WHICH SAFETY CAN BE OF SPECIAL SIGNIFICANCE. WHEN REPLACING A COMPONENT IDENTIFIED BY ⚠, USE ONLY THE REPLACEMENT PARTS DESIGNATED, OR PARTS WITH THE SAME RATINGS OF RESISTANCE, WATTAGE OR VOLTAGE THAT ARE DESIGNATED IN THE PARTS LIST IN THIS MANUAL. LEAKAGE-CURRENT OR RESISTANCE MEASUREMENTS MUST BE MADE TO DETERMINE THAT EXPOSED PARTS ARE ACCEPTABLY INSULATED FROM THE SUPPLY CIRCUIT BEFORE RETURNING THE PRODUCT TO THE CUSTOMER.

CAUTION : Regular type resistors and capacitors are not listed. To know those values, refer to the schematic diagram.
Regular type resistors are less than 1/4 W Carbon type and Chip type resistors.
Regular type capacitors are less than 50 V and less than 1000 µF type of Ceramic type, Electrolytic type and Chip type.
N.S.P : Not supplied as service parts.

PACKING & ACCESSORIES

REF.NO.	PART NO.	DESCRIPTION
	614 318 0609	CARTON CASE,INNER SLEEVE (DC-X8CM/UK)
	614 317 8026	CARTON CASE(MDG-088/XE)
	614 316 2766	CUSHION,FRONT(DC-X8CM/UK)
	614 319 4385	CUSHION,FRONT(MDG-088/XE)
	614 316 2773	CUSHION,BACK(DC-X8CM/UK)
	614 319 4392	CUSHION,BACK(MDG-088/XE)
	645 047 3074	POLY SHEET-0650X0400*NC,SET (DC-X8CM/UK)
	645 047 3081	POLY SHEET-0650X0400*NC,SET (MDG-088/XE)
	645 043 9421	CABLE, OPTICAL(MDG-088/XE)

CABINET & CHASSIS

REF.NO.	PART NO.	DESCRIPTION
1	614 316 6290	ASSY,CABINET,FRONT
2	614 316 2506	KNOB,ROTARY,JOG
3	614 316 2070	BUTTON,EJECT
4	614 316 2087	BUTTON,EDIT
5	614 316 2063	BUTTON,PLAY
6	614 316 6610	BUTTON,REC,COM REC
7	614 302 0530	DEC,WINDOW LED,COM REC
8	614 316 2339	DEC,WINDOW,MD,LIGHTING
9	614 316 2322	DEC,PANEL,MD,LIGHTING
10	614 316 2582	REFLECTOR,MD,LIGHTING
11	614 316 2421	DEC,SHEET,MD,LIGHTING
12	614 317 5490	PWB, BUTTON(N.S.P)
13	614 302 4378	MOUNTING,MD,MECHA
14	614 316 6306	ASSY,CABINET,BOTTOM
15	614 316 2544	PANEL,REAR(DC-X8CM/UK)
15	614 316 7587	PANEL,REAR(MDG-088/XE)
16	614 317 7418	ASSY,CABINET,BENDING, AFTER BENDING

FIXING PARTS

REF.NO.	PART NO.	DESCRIPTION
Y01	411 021 6405	SCR S-TPG BIN 3X8, FRONT-BOTTOM FIX
Y02	411 165 3803	SCR S-TPG BIN 2.3X10, DEC PANEL MD
Y03	411 165 3803	SCR S-TPG BIN 2.3X10, FRONT PWB FIX
Y05	411 098 4205	SCR S-TPG BIN 3X8,CABINET
Y06	411 023 4003	SCR S-TPG PAN 3X10, MD MECHA-MOUNTING
Y07	411 021 6405	SCR S-TPG BIN 3X8, MOUNTING-BOTTOM
Y08	411 021 6405	SCR S-TPG BIN 3X8,MAIN PWB
Y09	411 021 3701	SCR S-TPG BIN 3X10,BOTTOM-REAR
Y10	411 021 3701	SCR S-TPG BIN 3X10, REAR-ELECT PART
Y11	614 129 9136	LUG

ELECTRICAL PARTS

REF.NO.	PART NO.	DESCRIPTION
51	614 318 0012	ASSY,WIRE,7P-FRONT_DG
52	614 318 0005	ASSY,WIRE,8P-FRONT_DG
53	645 048 1970	FLEXIBLE FLAT CABLE
54	645 037 3190	FLEXIBLE FLAT CABLE, MECHA-DG PWB

LED1 P.W.BOARD ASSY

REF.NO.	PART NO.	DESCRIPTION
71	614 316 4067	ASSY,PWB,MD LED1 (Only Initial)
D5440	408 044 9100	LED HLMP-EL31-SVK00

LED2 P.W.BOARD ASSY

REF.NO.	PART NO.	DESCRIPTION
72	614 316 4074	ASSY,PWB,MD LED2 (Only Initial)
D5450	408 044 9100	LED HLMP-EL31-SVK00

FRONT P.W.BOARD ASSY

REF.NO.	PART NO.	DESCRIPTION
73	614 316 4050	ASSY,PWB,MD FRONT (Only Initial)
CN532	645 034 8631	SOCKET,FPC 23P
D5302	408 032 5404	LED SLP-9118C-51H-S-T1
D5303	407 100 0303	ZENER DIODE MTZJ36B
FL501	645 034 8044	FLOURESCENT TUBE
HL530	614 302 4347	HOLDER,FL,HOLDER-FL
IC531	410 384 0907	IC M38197MAA-636FP
IC532	409 329 9204	IC TC74ACT32F
IC533	409 471 0302	IC BMR-0301I
L5961	645 001 4550	INDUCTOR,10U K
or	645 031 7835	INDUCTOR,10U K
L5962	645 001 4550	INDUCTOR,10U K
or	645 031 7835	INDUCTOR,10U K
LG531	614 129 9082	LUG,FRONT-BOTTOM
LG541	645 023 8987	FIXER
Q5304	405 143 0007	TR KRC107M
or	405 000 3806	TR DTC114YS
Q5330	405 143 8904	TR KRA106M
or	405 075 8102	TR DTA143ZS
RA531	614 218 0525	RESISTOR
S5301	645 033 7680	SWITCH,ROTARY(ENCODER)
S5302	645 006 5958	SWITCH,PUSH 1P-1T
or	614 220 5471	SWITCH,TACT
or	614 240 1002	SWITCH,TACT

PARTS LIST

REF.NO.	PART NO.	DESCRIPTION
S5304	645 006 5958	SWITCH,PUSH 1P-1T
or	614 220 5471	SWITCH,TACT
or	614 240 1002	SWITCH,TACT
S5305	645 006 5958	SWITCH,PUSH 1P-1T
or	614 220 5471	SWITCH,TACT
or	614 240 1002	SWITCH,TACT
S5306	645 006 5958	SWITCH,PUSH 1P-1T
or	614 220 5471	SWITCH,TACT
or	614 240 1002	SWITCH,TACT
S5308	645 006 5958	SWITCH,PUSH 1P-1T
or	614 220 5471	SWITCH,TACT
or	614 240 1002	SWITCH,TACT
S5309	645 006 5958	SWITCH,PUSH 1P-1T
or	614 220 5471	SWITCH,TACT
or	614 240 1002	SWITCH,TACT
S5310	645 006 5958	SWITCH,PUSH 1P-1T
or	614 220 5471	SWITCH,TACT
or	614 240 1002	SWITCH,TACT
S5311	645 006 5958	SWITCH,PUSH 1P-1T
or	614 220 5471	SWITCH,TACT
or	614 240 1002	SWITCH,TACT
S5312	645 006 5958	SWITCH,PUSH 1P-1T
or	614 220 5471	SWITCH,TACT
or	614 240 1002	SWITCH,TACT
S5313	645 006 5958	SWITCH,PUSH 1P-1T
or	614 220 5471	SWITCH,TACT
or	614 240 1002	SWITCH,TACT
S5314	645 006 5958	SWITCH,PUSH 1P-1T
or	614 220 5471	SWITCH,TACT
or	614 240 1002	SWITCH,TACT
S5315	645 006 5958	SWITCH,PUSH 1P-1T
or	614 220 5471	SWITCH,TACT
or	614 240 1002	SWITCH,TACT
TA541	614 112 1451	DOUBLE FACE,FL_MOUNT
X5301	645 027 5470	OSC,CERAMIC 8MHZ

POWER SUPPLY P.W.BOARD ASSY

REF.NO.	PART NO.	DESCRIPTION
74	614 316 4081	ASSY,PWB,MD POWER SUPPLY (Only Initial)
C4410	403 313 4602	ELECT 1000U M 16V
C4905	403 329 6201	ELECT 2200U M 35V
C4906	403 329 6201	ELECT 2200U M 35V
C4950	403 329 6003	ELECT 4700U M 25V
C4951	403 329 3309	ELECT 2200U M 25V
C5940	403 291 5608	ELECT 1000U M 6.3V
CN500	614 310 2496	PLUG,8P
or	645 005 8134	PLUG,8P
CN501	614 310 2489	PLUG,7P
or	645 006 0861	PLUG,7P
CN502	645 045 9511	SOCKET,SYSTEM 19P
CN503	645 035 5769	SOCKET,FPC 26P
CN572	407 222 4302	PHOTO COUPLE TORX141
or	407 212 5708	PHOTO COUPLE GP1F38R
D5932	407 099 5303	ZENER DIODE MTZJ5.6B
D5933	407 099 5303	ZENER DIODE MTZJ5.6B
D5940	408 044 6307	DIODE SB140L 19C2-004
HS501	614 270 2598	HEAT SINK
IC503	409 185 6102	IC TC74HCU04AP
IC571	409 384 3506	IC BA3314F
IC573	409 333 2505	IC BU4066BCF
IC591	409 463 6701	IC KIA7805API
IC592	409 466 6807	IC S-81233SGUP-DQF
IC593	409 471 0302	IC BMR-0301I

REF.NO.	PART NO.	DESCRIPTION
IC594	409 466 6807	IC S-81233SGUP-DQF
L5701	645 001 4581	INDUCTOR,100U K
or	645 031 7842	INDUCTOR,100U K
L5801	645 001 4581	INDUCTOR,100U K
or	645 031 7842	INDUCTOR,100U K
L5901	645 001 4550	INDUCTOR,10U K
or	645 031 7835	INDUCTOR,10U K
L5902	645 001 4581	INDUCTOR,100U K
or	645 031 7842	INDUCTOR,100U K
L5903	645 006 3602	INDUCTOR,1.1UH
L5904	645 006 3602	INDUCTOR,1.1UH
L5905	645 006 3602	INDUCTOR,1.1UH
L5906	645 004 0511	INDUCTOR,270U J
L5951	645 001 5519	INDUCTOR,47U K
LG581	645 023 8987	FIXER,FIX_WIRE
Q5342	405 146 1209	TR KRC104M
or	405 000 6104	TR DTC144ES
Q5343	405 146 1308	TR KRA104M
or	405 000 2205	TR DTA144ES
Q5710	405 109 9402	TR KRC111M
or	405 000 3400	TR DTC114TS
Q5810	405 109 9402	TR KRC111M
or	405 000 3400	TR DTC114TS
Q5902	405 146 1209	TR KRC104M
or	405 000 6104	TR DTC144ES
Q5905	405 141 3703	TR KTA1271-Y
or	405 008 2405	TR 2SB698-F
or	405 008 2504	TR 2SB698-G
Q5906	X405 141 1402	TR KTD863-GR
or	X405 023 5009	TR 2SD400-E-MP
or	X405 023 5306	TR 2SD400-F-MP
Q5907	405 141 3703	TR KTA1271-Y
or	405 008 2405	TR 2SB698-F
or	405 008 2504	TR 2SB698-G
Q5908	405 146 1209	TR KRC104M
or	405 000 6104	TR DTC144ES
SA001	411 021 3503	SCR S-TPG BIN 3X10,FOR_IC591

MD MECHANISM(MDG007/SH)

REF.NO.	PART NO.	DESCRIPTION
MM00	614 304 8350	ASSY,MECHA,MDG007/SH, MD MECHA ASSY
MM01	614 303 8344	ASSY,DOOR,MD DOOR W/PAINTING
MM02	614 303 6609	SHAFT,DOOR,MD DOOR SHAFT
MM03	614 303 6616	SPRING,DOOR,MD DOOR RETURN

WIRING CONECTIN

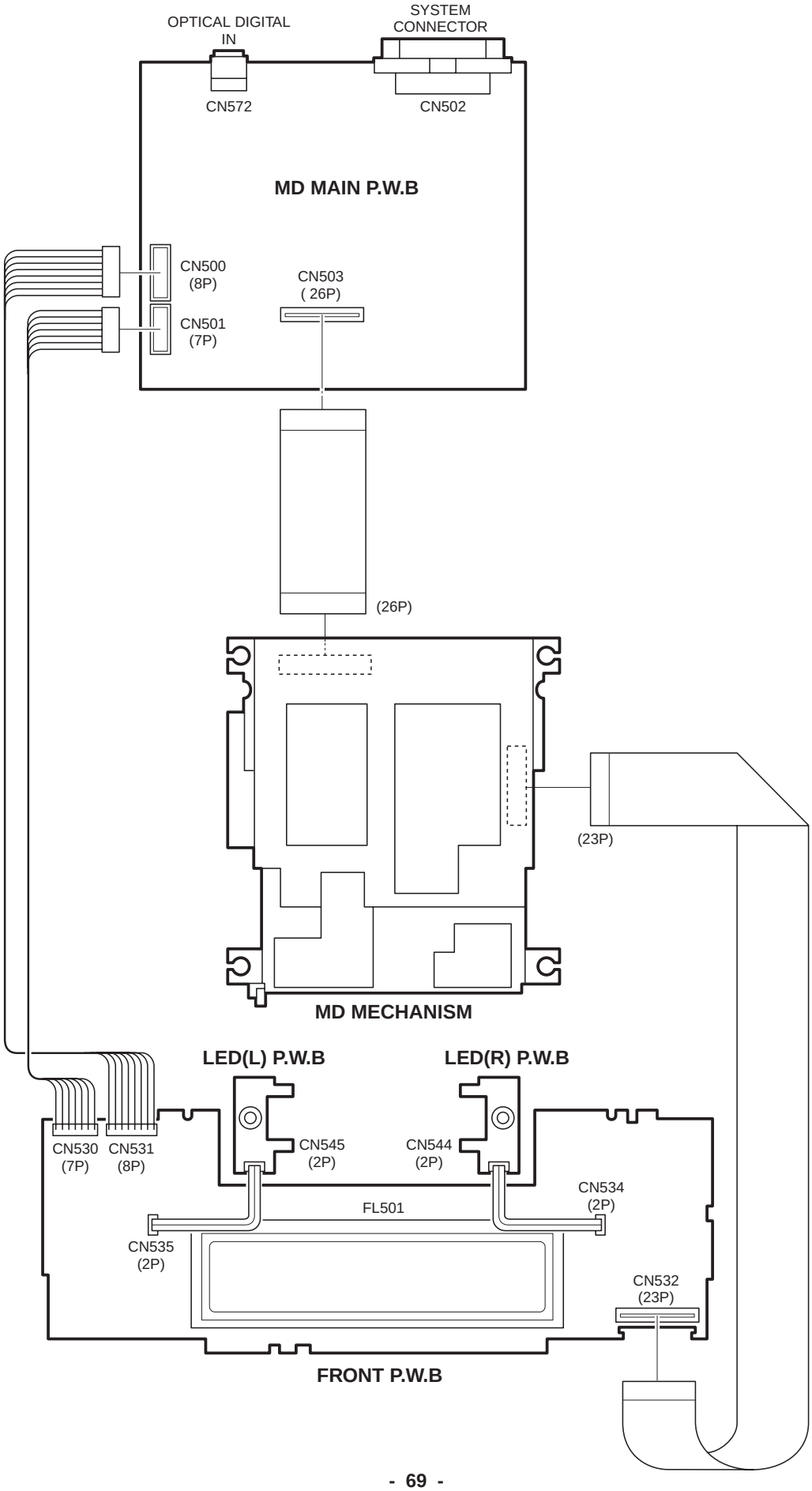

SCHEMATIC DIAGRAM (FRONT)

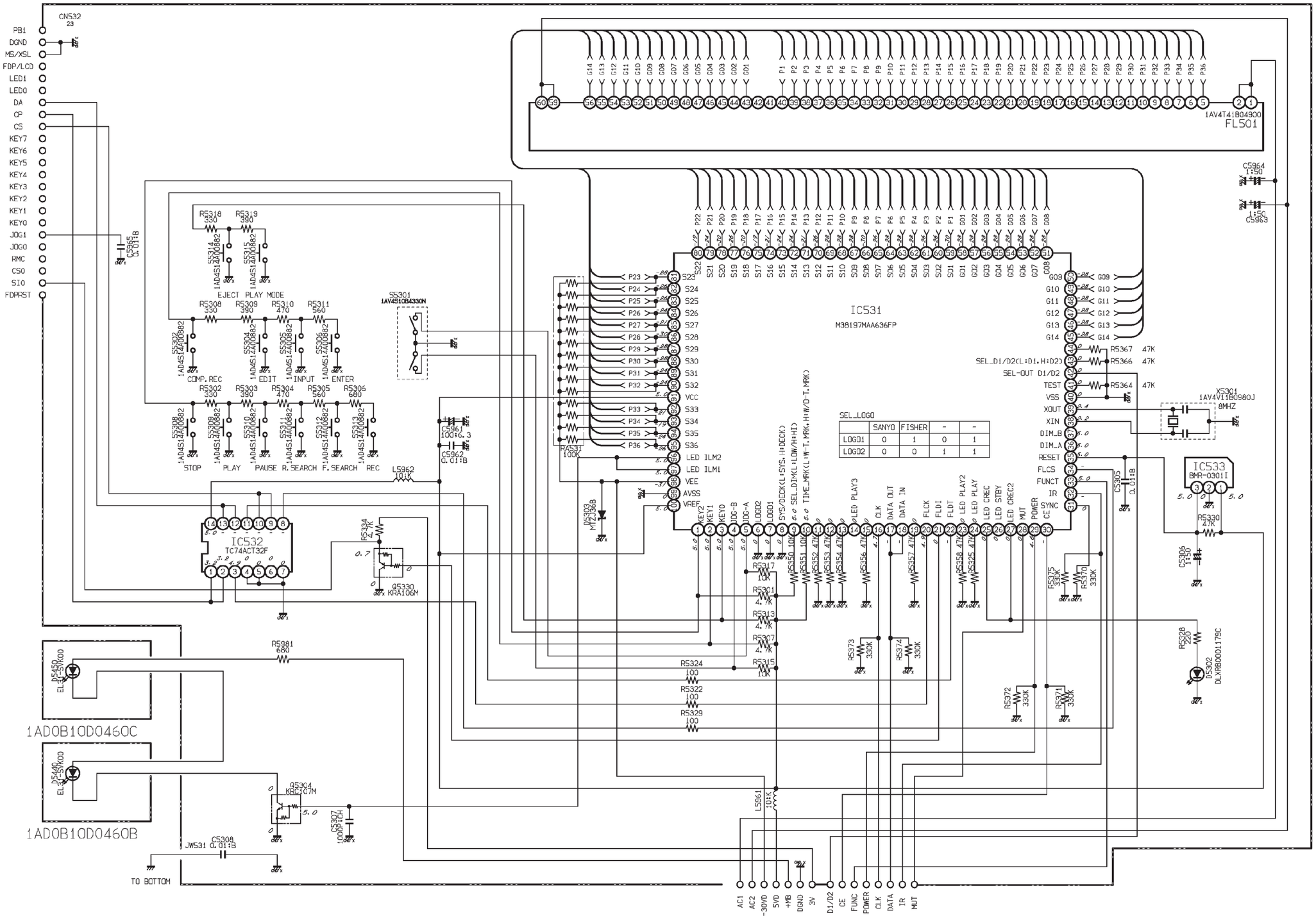

This is a basic schematic diagram.

SCHEMATIC DIAGRAM (POWER SUPPLY)

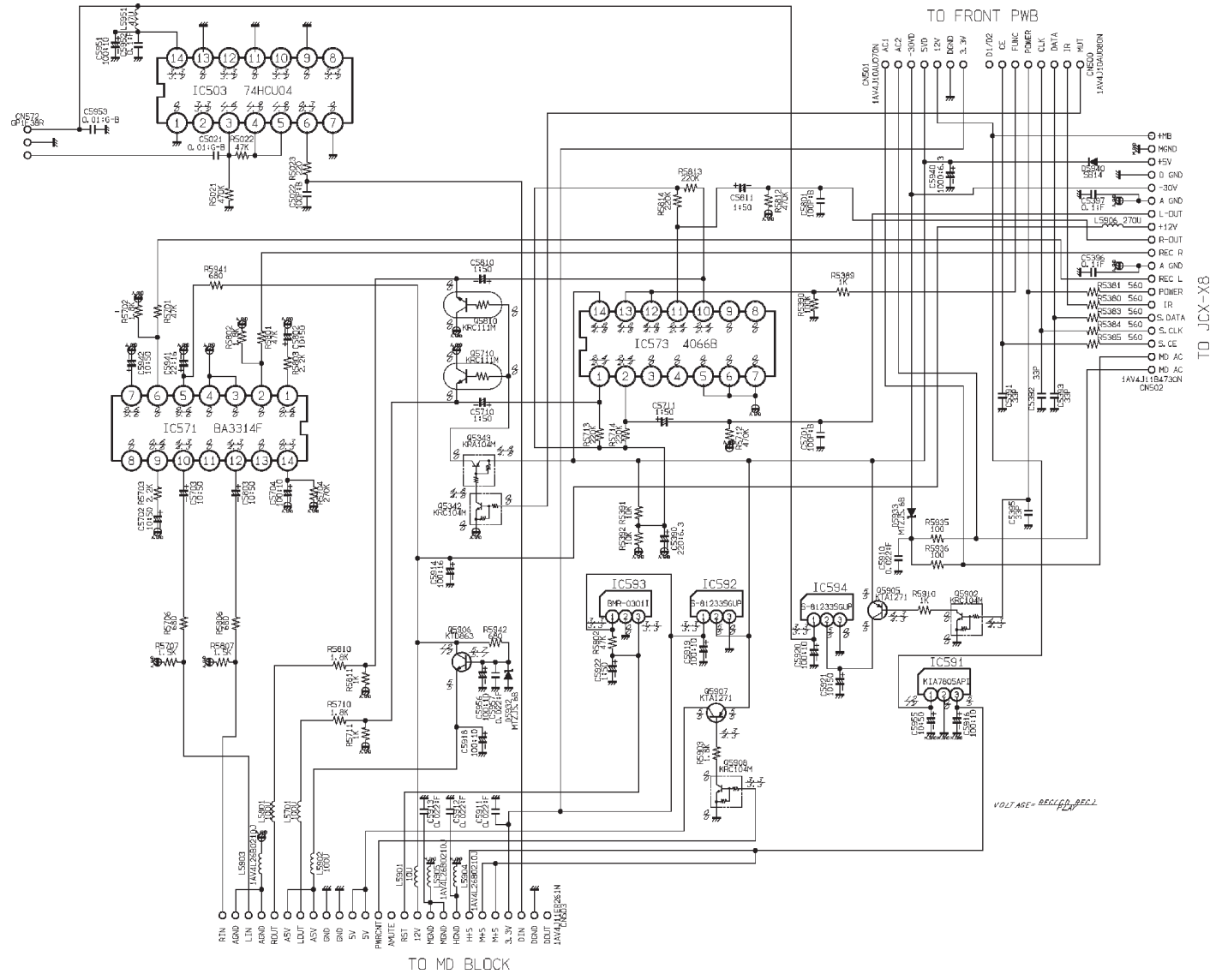

This is a basic schematic diagram.

FL DISPLAY & DESCRIPTION

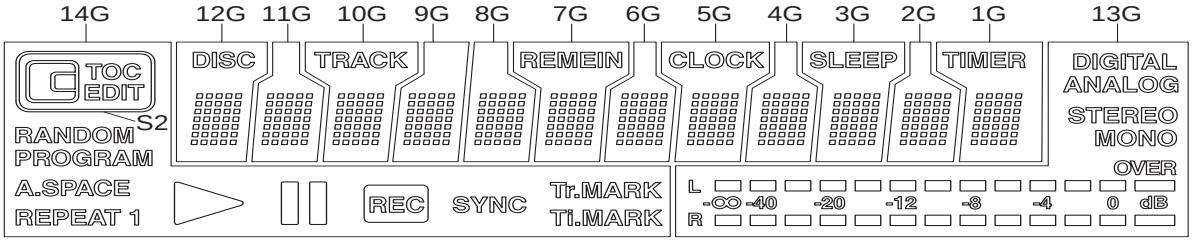

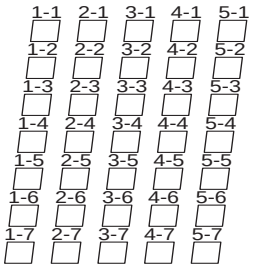

(12G~1G)

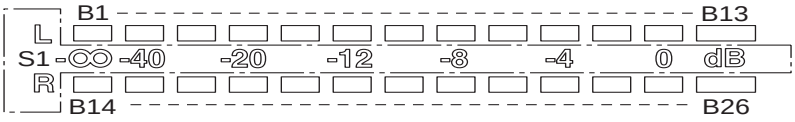

(13G)

PIN CONNECTION

PIN NO.	60	59	58	57	56	55	54	53	52	51	50	49	48	47	46	45	44	43	42	41
CONNECTION	F2	F2	NP	NP	14G	13G	12G	11G	10G	9G	8G	7G	6G	5G	4G	3G	2G	1G	NC	NC
PIN NO.	40	39	38	37	36	35	34	33	32	31	30	29	28	27	26	25	24	23	22	21
CONNECTION	P1	P2	P3	P4	P5	P6	P7	P8	P9	P10	P11	P12	P13	P14	P15	P16	P17	P18	P19	P20
PIN NO.	20	19	18	17	16	15	14	13	12	11	10	9	8	7	6	5	4	3	2	1
CONNECTION	P21	P22	P23	P24	P25	P26	P27	P28	P29	P30	P31	P32	P33	P34	P35	P36	NP	NP	F1	F1

NOTE:
1) F1,F2 ..... Filament
2) NP ..... No pin
3) NC ..... No connection
4) DL ..... Datum Line
5) 1G~14G Grid

ANODE CONNECTION

	14G	13G	12G	11G	10G	9G	8G	7G	6G	5G	4G	3G	2G	1G
P1	—	MONO	DISC	—	TRACK	—	—	REMAIN	—	CLOCK	—	SLEEP	—	
P2		—	1-1	1-1	1-1	1-1	1-1	1-1	1-1	1-1	1-1	1-1	1-1	1-1
P3	TOC	B1	2-1	2-1	2-1	2-1	2-1	2-1	2-1	2-1	2-1	2-1	2-1	2-1
P4	EDIT	B8	3-1	3-1	3-1	3-1	3-1	3-1	3-1	3-1	3-1	3-1	3-1	3-1
P5	S2	B14	4-1	4-1	4-1	4-1	4-1	4-1	4-1	4-1	4-1	4-1	4-1	4-1
P6	RANDOM	B21	5-1	5-1	5-1	5-1	5-1	5-1	5-1	5-1	5-1	5-1	5-1	5-1
P7	RPROGRAM	—	1-2	1-2	1-2	1-2	1-2	1-2	1-2	1-2	1-2	1-2	1-2	1-2
P8	A.SPACE	B21	2-2	2-2	2-2	2-2	2-2	2-2	2-2	2-2	2-2	2-2	2-2	2-2
P9	REPEAT	B9	3-2	3-2	3-2	3-2	3-2	3-2	3-2	3-2	3-2	3-2	3-2	3-2
P10	1	B15	4-2	4-2	4-2	4-2	4-2	4-2	4-2	4-2	4-2	4-2	4-2	4-2
P11	A	B22	5-2	5-2	5-2	5-2	5-2	5-2	5-2	5-2	5-2	5-2	5-2	5-2
P12	K	—	1-3	1-3	1-3	1-3	1-3	1-3	1-3	1-3	1-3	1-3	1-3	1-3
P13	REC	B3	2-3	2-3	2-3	2-3	2-3	2-3	2-3	2-3	2-3	2-3	2-3	2-3
P14	SYNC	B10	3-3	3-3	3-3	3-3	3-3	3-3	3-3	3-3	3-3	3-3	3-3	3-3
P15	TrMARK	B16	4-3	4-3	4-3	4-3	4-3	4-3	4-3	4-3	4-3	4-3	4-3	4-3
P16	TIMARK	B23	5-3	5-3	5-3	5-3	5-3	5-3	5-3	5-3	5-3	5-3	5-3	5-3
P17	—	—	1-4	1-4	1-4	1-4	1-4	1-4	1-4	1-4	1-4	1-4	1-4	1-4
P18	—	B4	2-4	2-4	2-4	2-4	2-4	2-4	2-4	2-4	2-4	2-4	2-4	2-4
P19	—	B11	3-4	3-4	3-4	3-4	3-4	3-4	3-4	3-4	3-4	3-4	3-4	3-4
P20	—	B17	4-4	4-4	4-4	4-4	4-4	4-4	4-4	4-4	4-4	4-4	4-4	4-4
P21	—	B24	5-4	5-4	5-4	5-4	5-4	5-4	5-4	5-4	5-4	5-4	5-4	5-4
P22	—	S1	1-5	1-5	1-5	1-5	1-5	1-5	1-5	1-5	1-5	1-5	1-5	1-5
P23	—	B5	2-5	2-5	2-5	2-5	2-5	2-5	2-5	2-5	2-5	2-5	2-5	2-5
P24	—	B12	3-5	3-5	3-5	3-5	3-5	3-5	3-5	3-5	3-5	3-5	3-5	3-5
P25	—	B18	4-5	4-5	4-5	4-5	4-5	4-5	4-5	4-5	4-5	4-5	4-5	4-5
P26	—	B25	5-5	5-5	5-5	5-5	5-5	5-5	5-5	5-5	5-5	5-5	5-5	5-5
P27	—	OVER	1-6	1-6	1-6	1-6	1-6	1-6	1-6	1-6	1-6	1-6	1-6	1-6
P28	—	B6	2-6	2-6	2-6	2-6	2-6	2-6	2-6	2-6	2-6	2-6	2-6	2-6
P29	—	B13	3-6	3-6	3-6	3-6	3-6	3-6	3-6	3-6	3-6	3-6	3-6	3-6
P30	—	B19	4-6	4-6	4-6	4-6	4-6	4-6	4-6	4-6	4-6	4-6	4-6	4-6
P31	—	B26	5-6	5-6	5-6	5-6	5-6	5-6	5-6	5-6	5-6	5-6	5-6	5-6
P32	—	DIGITAL	1-7	1-7	1-7	1-7	1-7	1-7	1-7	1-7	1-7	1-7	1-7	1-7
P33	—	B7	2-7	2-7	2-7	2-7	2-7	2-7	2-7	2-7	2-7	2-7	2-7	2-7
P34	—	ANALOG	3-7	3-7	3-7	3-7	3-7	3-7	3-7	3-7	3-7	3-7	3-7	3-7
P35	—	B20	4-7	4-7	4-7	4-7	4-7	4-7	4-7	4-7	4-7	4-7	4-7	4-7
P36	—	STEREO	5-7	5-7	5-7	5-7	5-7	5-7	5-7	5-7	5-7	5-7	5-7	5-7

June/ '01 / 1820 BB Printed in Japan

SANYO Technosound Co., Ltd.
Osaka, Japan

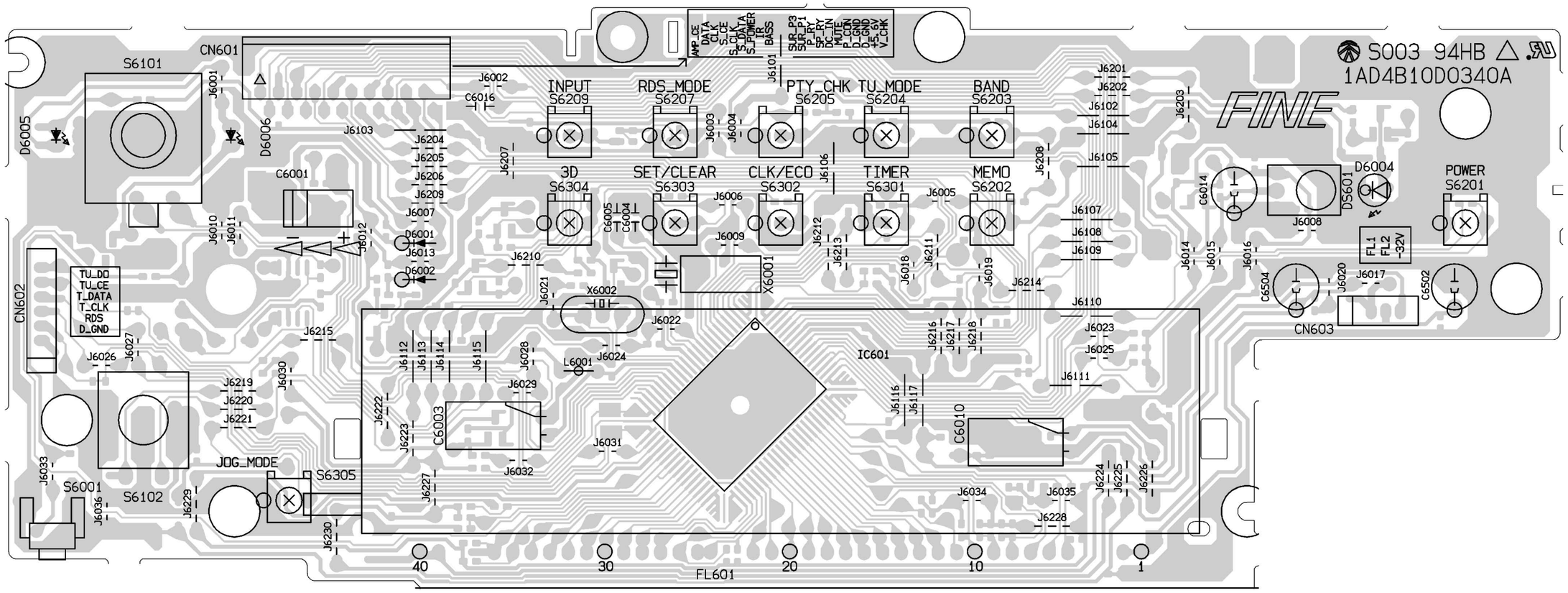
S003 94HB
1AD4B10D0340A
FINE
CN601
S6101
D6005
D6006
C6001
INPUT
S6209
RDS_MODE
S6207
PTY_CHK
S6205
TU_MODE
S6204
BAND
S6203
3D
S6304
SET/CLEAR
S6303
CLK/ECO
S6302
TIMER
S6301
MEMO
S6202
POWER
S6201
D6004
DS601
FL1
FL2
-32V
CN603
CN602
TU_DO
TU_CE
T_DATA
T_CLK
RDS
D_GND
X6002
X6001
L6001
IC601
C6003
C6010
JOG_MODE
S6305
S6001
S6102
FL601
40
30
20
10
1

WIRING DIAGRAM (AMPLIFIER)

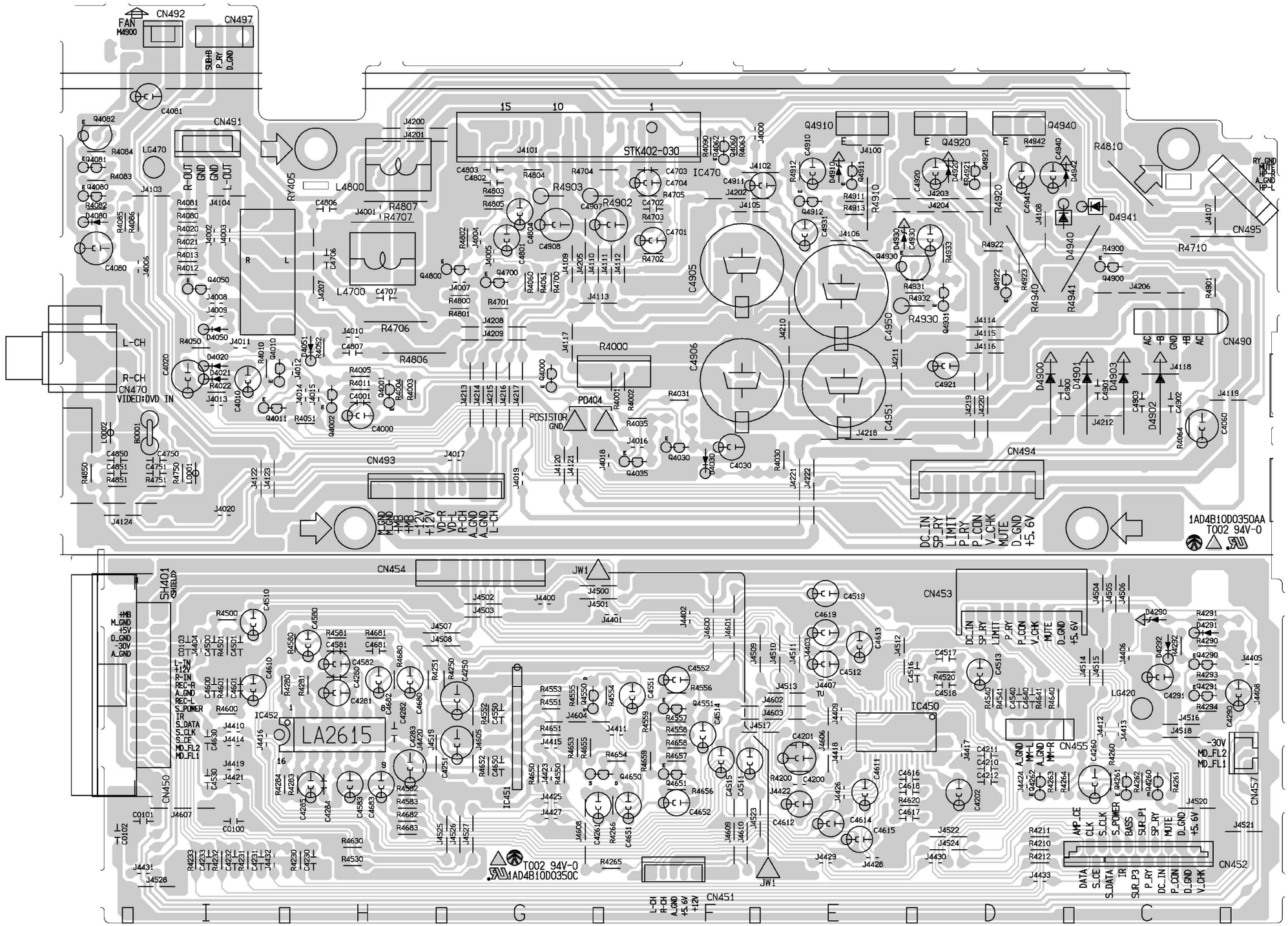

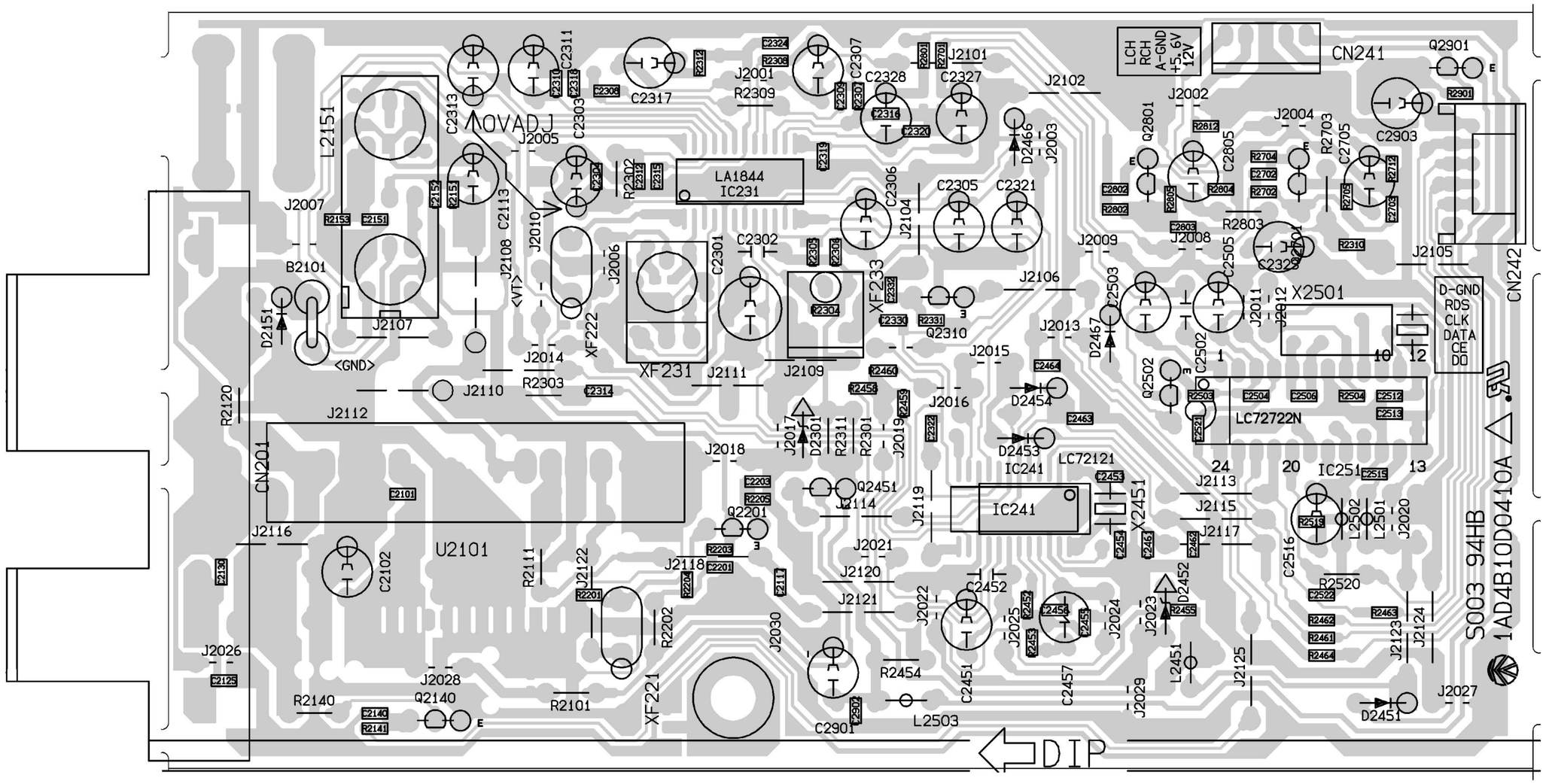
LCH
RCH
A-GND
+5.6V
12V
CN241
Q2901
L2151
OVADJ
LA1844
IC231
XF231
XF233
XF222
XF221
CN201
U2101
CN242
X2501
LC72722N
IC241
LC72121
X2451
IC251
D-GND
RDS
CLK
DATA
CE
DO
S003 94HB
1AD4B10D0410A
DIP

WIRING DIAGRAM (CD,FRONT & OPEN CLOSE SWITCH)

CD P.W.BOARD ASSY

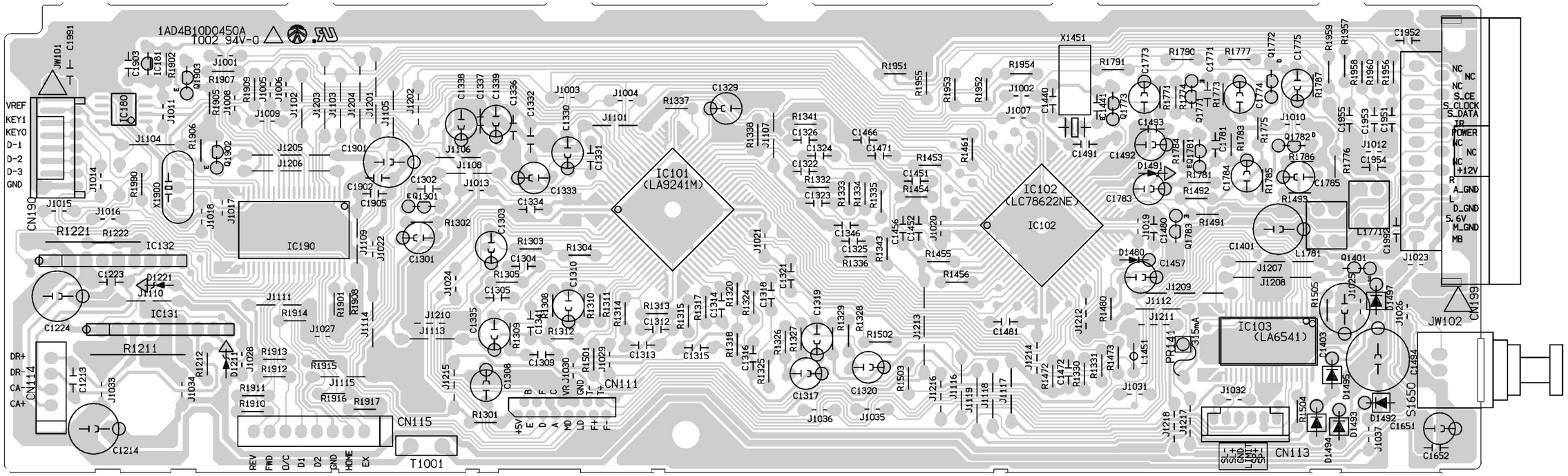

FRONT P.W.BOARD ASSY

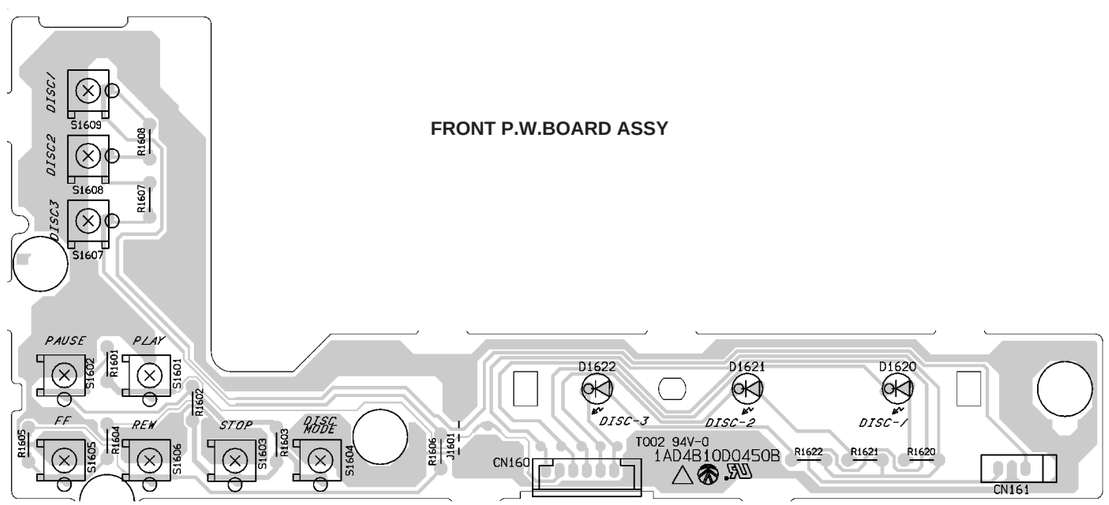

OPEN CLOSE SWITCH P.W.BOARD ASSY

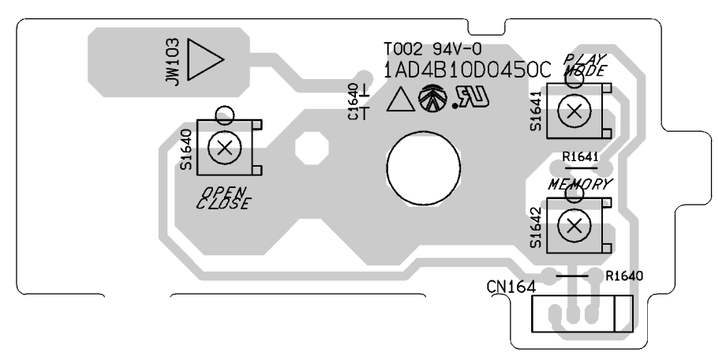

WIRING DIAGRAM (DECK, DECK SWITCH, DECK SWITCH 2& DECK LED)

DECK SWITCH P.W.BOARD ASSY

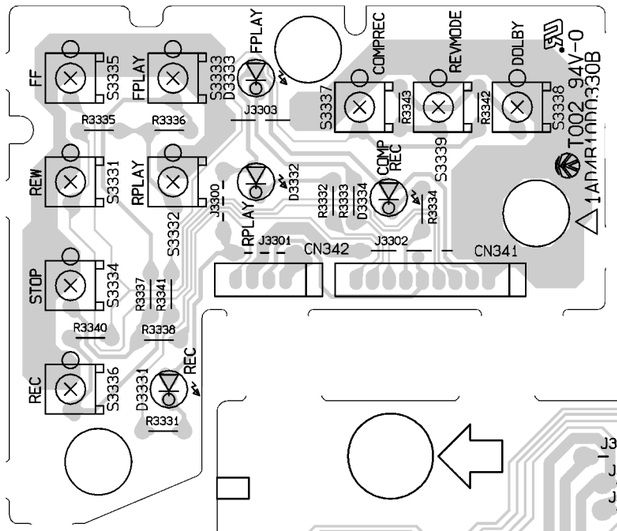

DECK SWITCH 2 P.W.BOARD ASSY

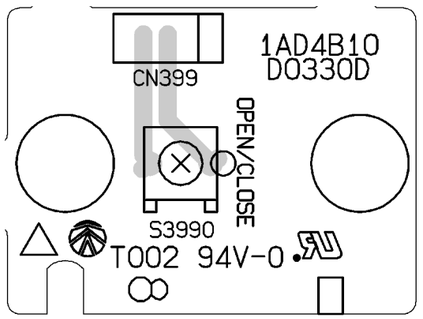

DECK LED P.W.BOARD ASSY

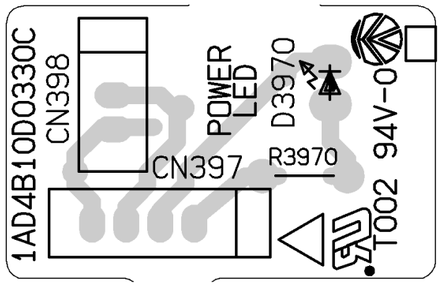

DECK P.W.BOARD ASSY

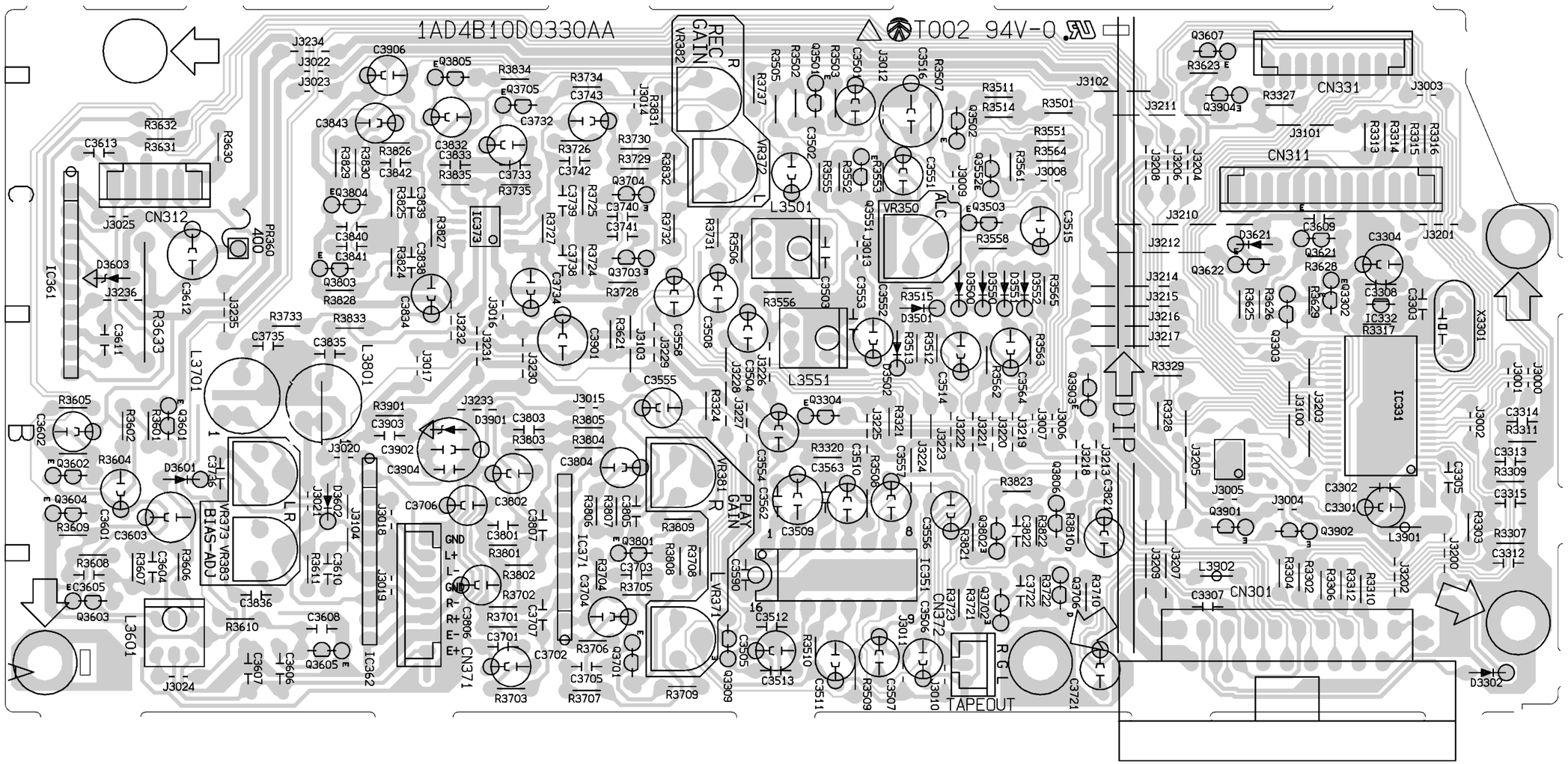

LED 1 P.W.BOARD ASSY

LED 2 P.W.BOARD ASSY

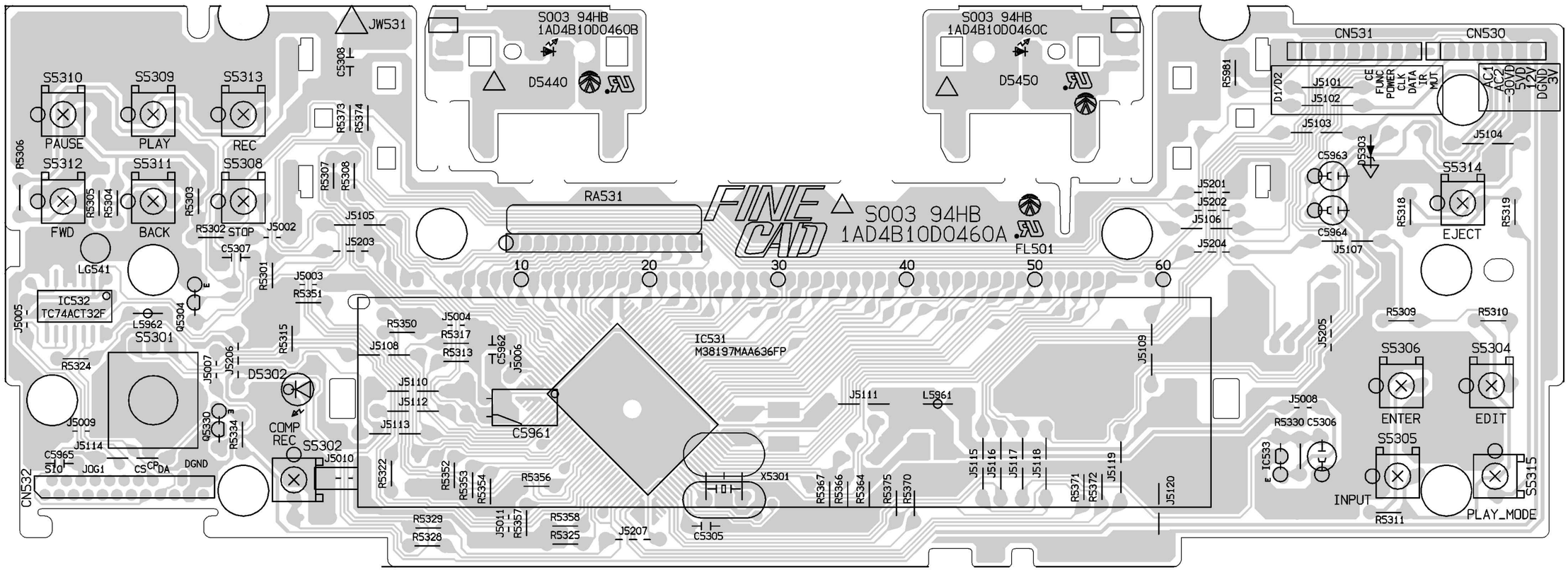

FROMT P.W.BOARD ASSY
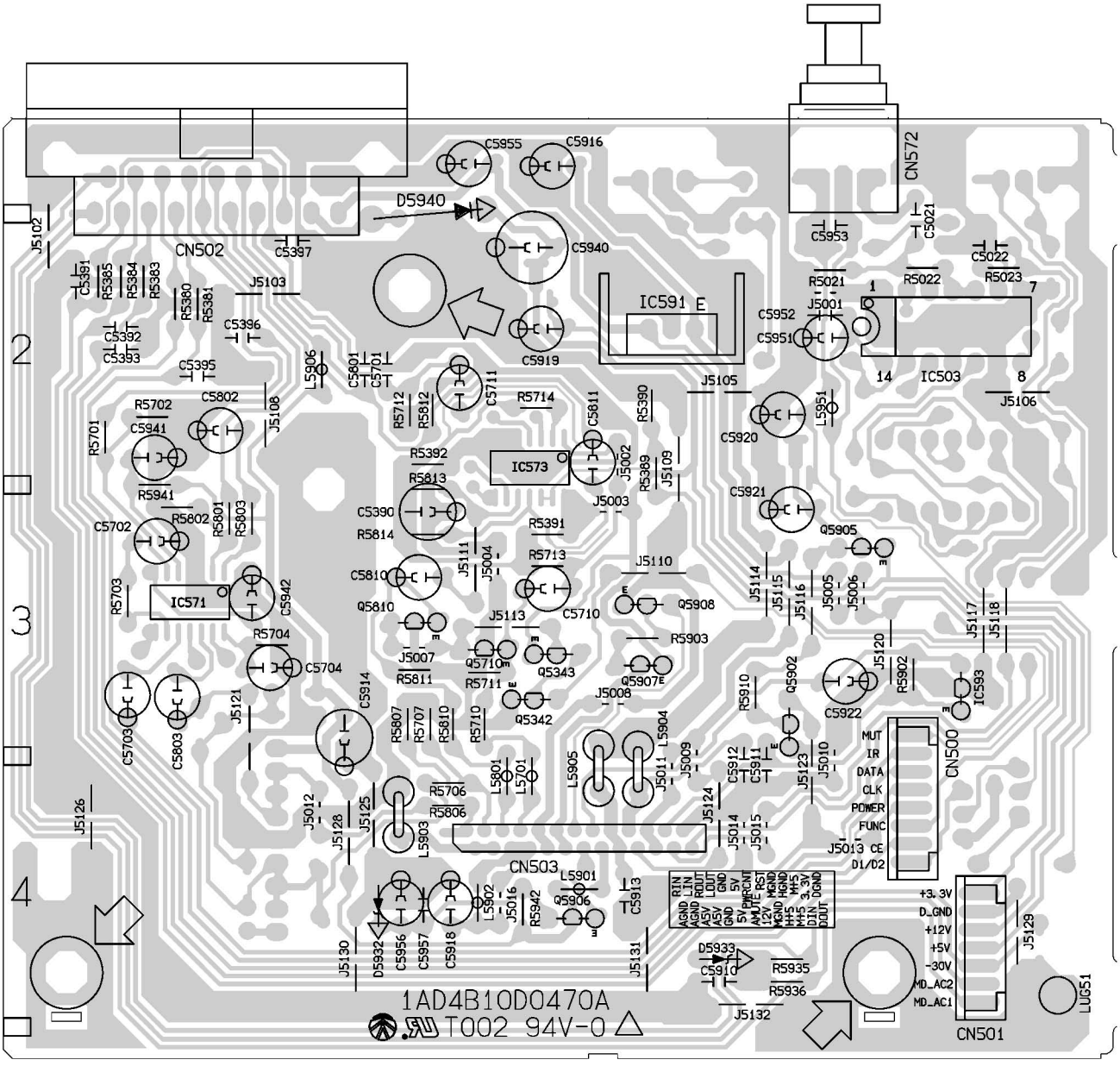
WIRING DIAGRAM(POWER SUPPLY)