STEREO AMPLIFIER

AV-80Y

SERVICE MANUAL

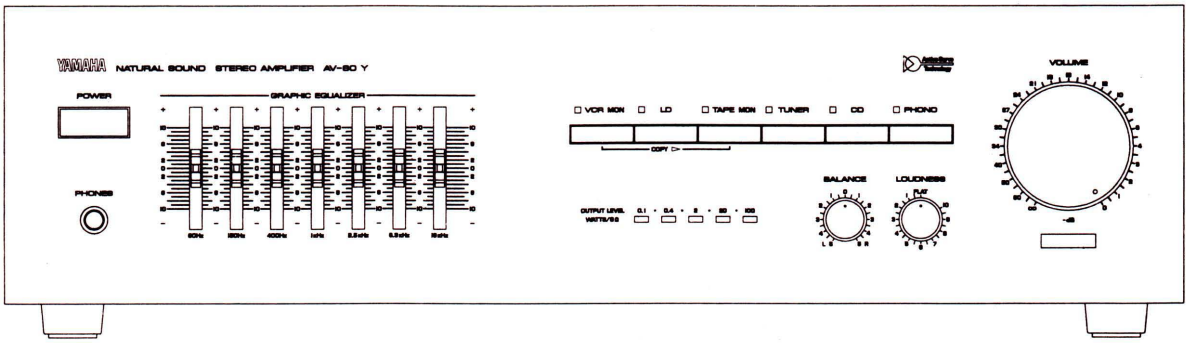

H model only

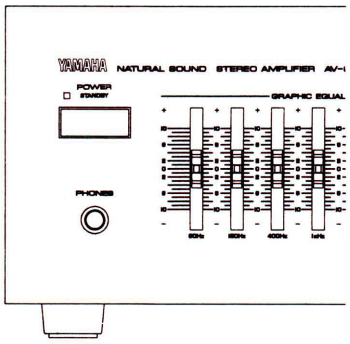

IMPORTANT NOTICE

This manual has been provided for the use of authorized YAMAHA Retailers and their service personnel. It has been assumed that basic service procedures inherant to the industry, and more specifically YAMAHA Products, are already known and understood by the users, and have therefore not been restated.

WARNING: Failure to follow appropriate service and safety procedures when servicing this product may result in personal injury, destruction of expensive components and failure of the product to perform as specified. For these reasons, we advise all YAMAHA product owners that all service required should be performed by an authorized YAMAHA Retailer or the appointed service representative.

IMPORTANT: The presentation or sale of this manual to any individual or firm does not constitute authorization, certification or recognition of any applicable technical capabilities, or establish a principle-agent relationship of any form.

The data provided is believed to be accurate and applicable to the unit(s) indicated on the cover. The reserch, engineering, and service departments of YAMAHA are continually striving to improve YAMAHA products. Modifications are, therefore, inevitable and specifications are subject to change without notice or obligation to retrofit. Should any discrepancy appear to exist, please contact the distributor's Service Division.

WARNING: Static discharges can destroy expensive components. Discharge any static electricity your body may have accumulated by grounding yourself to the ground buss in the unit (heavy gauge black wires connect to this buss).

IMPORTANT: Turn the unit OFF during disassembly and parts replacement. Recheck all work before you apply power to the unit.

■ CONTENTS

100380

YAMAHA
YAMAHA CORPORATION
P.O.Box 1, Hamamatsu, Japan
1.4k-346 Printed in Japan. '91.2

AV-80Y

■ TO SERVICE PERSONNEL

1. Critical Components Information.
   Components having special characteristics are marked and must be replaced with parts having specifications equal to those originally installed.
2. Leakage Current Measurement (For 120V Model Only).
   When service has been completed, it is imperative that you verify that all exposed conductive surfaces are properly insulated from supply circuits.

- Meter impedance should be equivalent to 1500 ohm shunted by 0.15µF.
- Leakage current must not exceed 0.5mA.
- Be sure to test for leakage with the AC plug in both polarities.

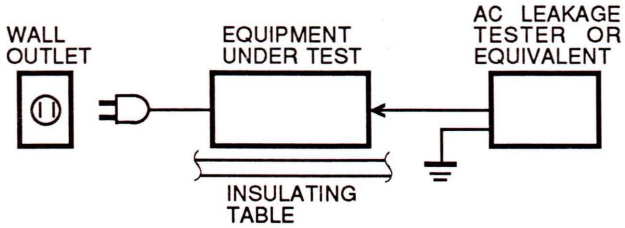

- **POLARIZATION (U, C models only)**
  This amplifier product is equipped with a polarized alternating-current line plug (a plug having one blade wider than the other). This plug will fit into the power outlet only one way. This is a safety feature.

WARNING: CHEMICAL CONTENT NOTICE!

The solder used in the production of this product contains LEAD. In addition, other electrical/electronic and/or plastic (where applicable) components may also contain traces of chemicals found by the California Health and Welfare Agency (and possibly other entities) to cause cancer and/or birth defects or other reproductive harm.

DO NOT PLACE SOLDER, ELECTRICAL/ELECTRONIC OR PLASTIC COMPONENTS IN YOUR MOUTH FOR ANY REASON WHATSOEVER!

Avoid prolonged, unprotected contact between solder and your skin! When soldering, do not inhale solder fumes or expose eyes to solder/flux vapor!

If you come in contact with solder or components located inside the enclosure of this product, wash your hands before handling food.

■ REAR PANELS

▼ U model

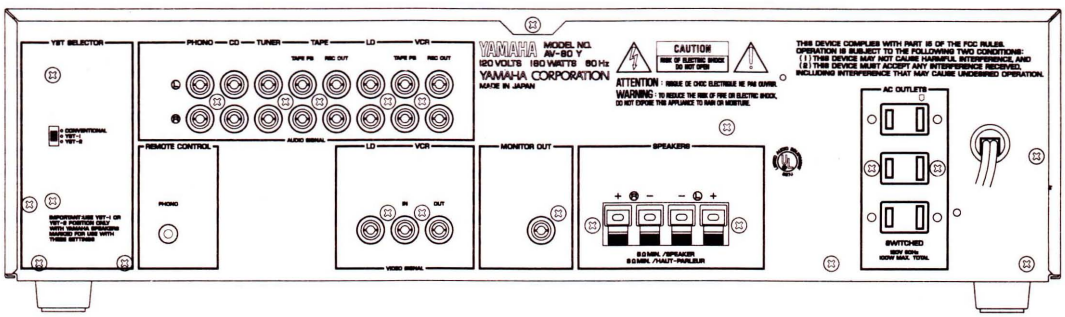

▼ C model

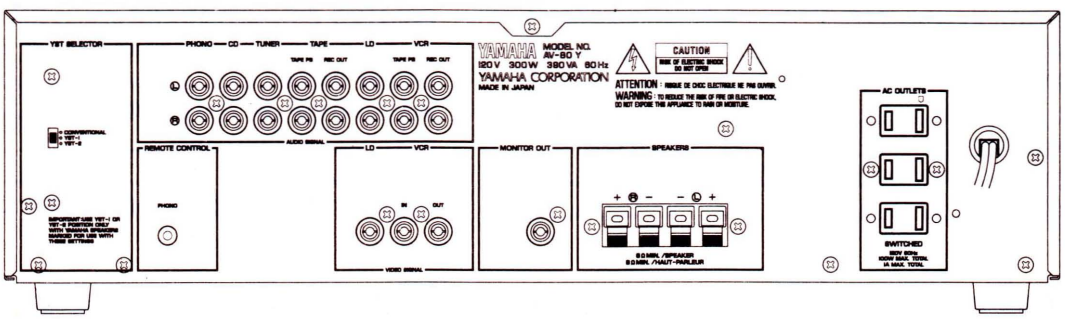

▼ R model

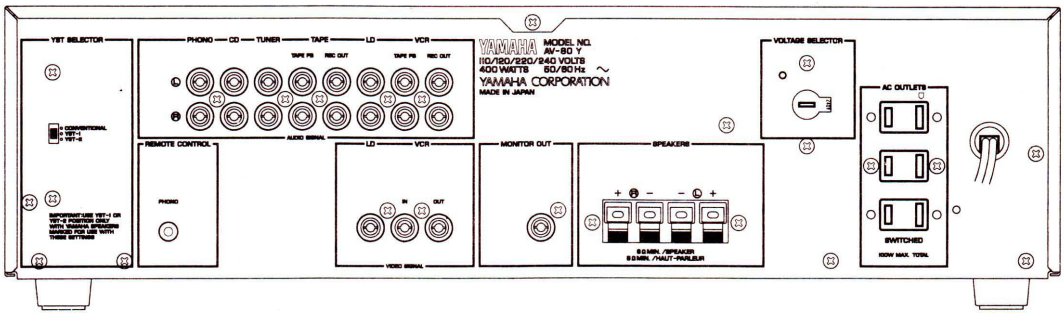

▼ A model

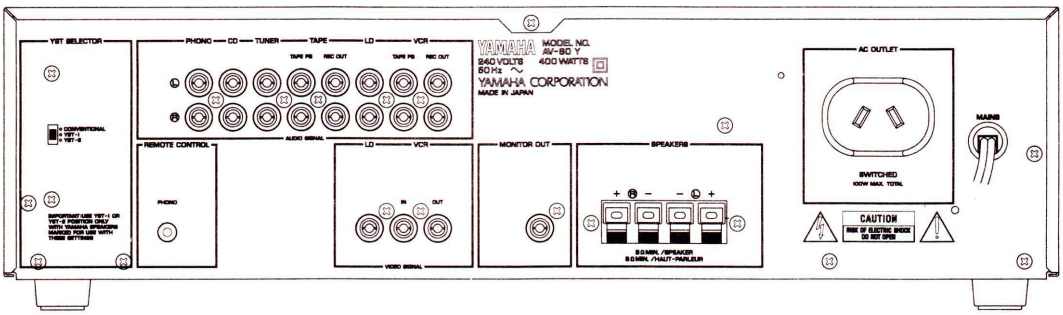

▼ H model

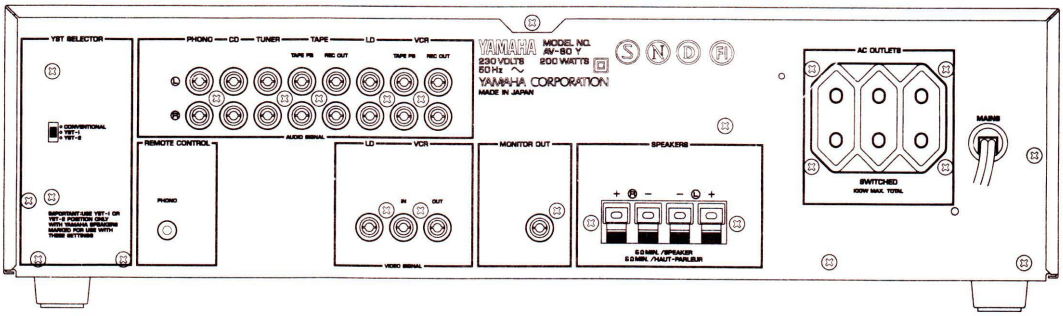

■ SPECIFICATIONS

■ AUDIO SECTION

Minimum RMS Output Power Per Channel	
20Hz~20kHz, 0.15% THD, 8Ω	100W (U, C)
0.3% THD, 8Ω	70W (R, A)
0.3% THD, 8Ω	55W (H)
Dynamic Power Per Channel	
(by IHF Dynamic Headroom measuring method)	
8Ω	145W (U, C)
	90W (R, A)
	60W (H)
6Ω	180W (U, C)
	100W (R, A)
	75W (H)
Dynamic Headroom	
8Ω	1.6dB (U, C)
IEC Power	
1kHz, 0.1% THD, 8Ω/6Ω	60W/70W (H)
Damping Factor	
1kHz, 8Ω	50
Input Sensitivity/Impedance	
Phono MM	2.5mV/47kΩ
CD etc.	150mV/47kΩ
Input Sensitivity (New IHF)	
Phono MM	0.25mV
CD etc.	15mV
Maximum-Input Signal	
1kHz, 0.02% THD, Phono MM	80mV
Output Level/Impedance	
Rec Out	150mV/1.4kΩ
Headphone Jack Rated Output/Impedance	
0.1% THD, RL=8Ω	180mV/150Ω (U, C)
	220mV/100Ω (R, A)
	180mV/100Ω (H)
Frequency Response	
20Hz~20kHz, CD etc.	–0.5dB±0.5dB
RIAA Equalization Deviation	
Phono MM	0dB±0.5dB
Total Harmonic Distortion (20Hz~20kHz)	
Phono MM to Rec Out, 3V	0.1%
CD etc to Speaker Out, 50W/8Ω	0.05% (U, C)
35W/8Ω	0.1% (R, A)
22W/8Ω	0.1% (H)
Signal to Noise Ratio (IHF-A-Network)	
Phono MM (5mV Input Shorted)	79dB
CD etc. (Shorted)	92dB
Residual Noise (IHF-A-Network)	200μV
Channel Separation (Vol. –30dB)	
Phono MM input shorted 1kHz/10kHz	55dB/50dB
CD etc input 5.1kΩ terminated 1kHz/10kHz	55dB/50dB
Graphic Equalizer	
Control Frequency	60Hz, 150Hz, 400Hz, 1kHz, 2.5kHz, 6.3kHz, 16kHz
Boost/Cut	±10dB
Continuous Loudness Control (Level related equalization)	
Attenuation	–20dB (1kHz)
Gain tracking error (0dB~–60dB)	3dB

■ VIDEO SECTION

Video Signal	
Input/Output	1Vp-p/75Ω

■ GENERAL

Power Supply	
U, C models	AC120V, 60Hz
A model	AC240V, 50Hz
H model	AC230V, 50Hz
R model	AC110/120/220/240V, 60/50Hz
Power Consumption	
U model	180W
C model	390VA/300W
A model	400W
C model	200W
A model	400W
AC Outlet	
Switched x 3 (U, R, H)	100W max. (Total)
Switched x 1 (A)	100W max.
Switched x 3 (C)	100W max. (Total)
	1A max. (Total)
Dimensions (WxHxD)	435 x 122.5 x 304.7 mm
	(17-1/8" x 4-13/16" x 12")
Weight	7.4kg (16 lbs 5 oz)

**Specifications subject to change without notice.*

C** ..... **Canadian model
U** ..... **U. S. A. model
A** ..... **Australian model
H** ..... **North European model
R** ..... **General model

● DIMENSIONS

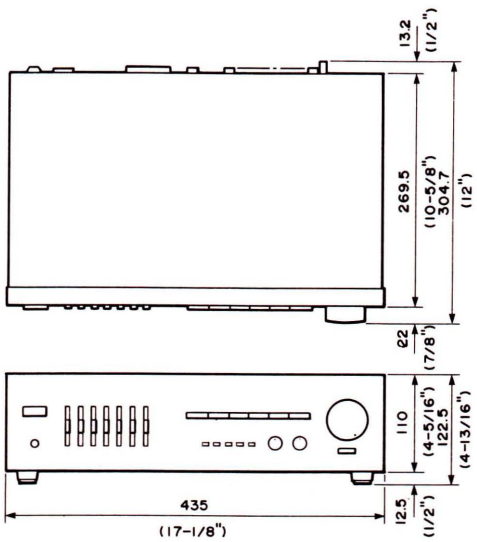

Unit : mm (inch)

■ BLOCK DIAGRAM

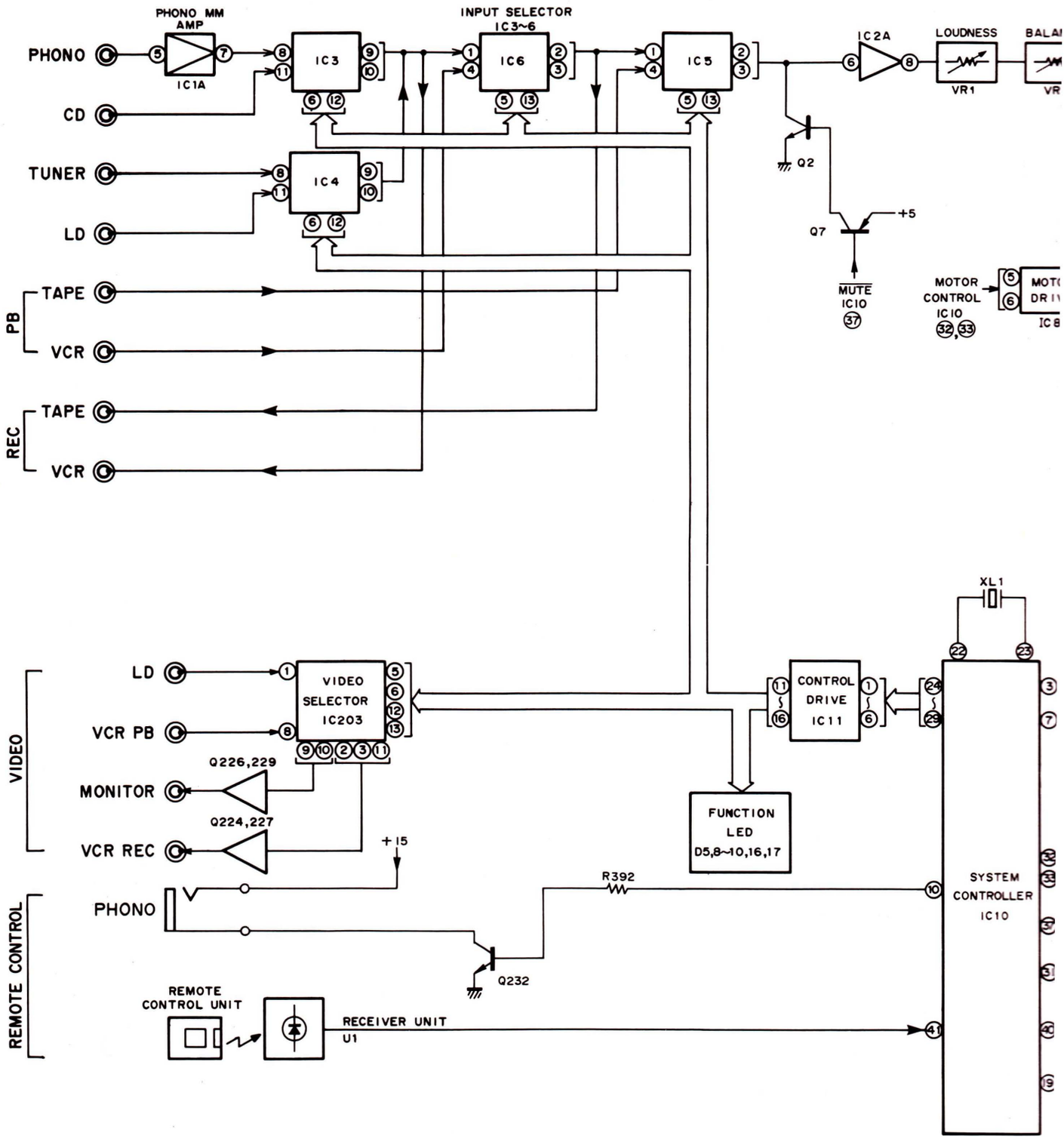

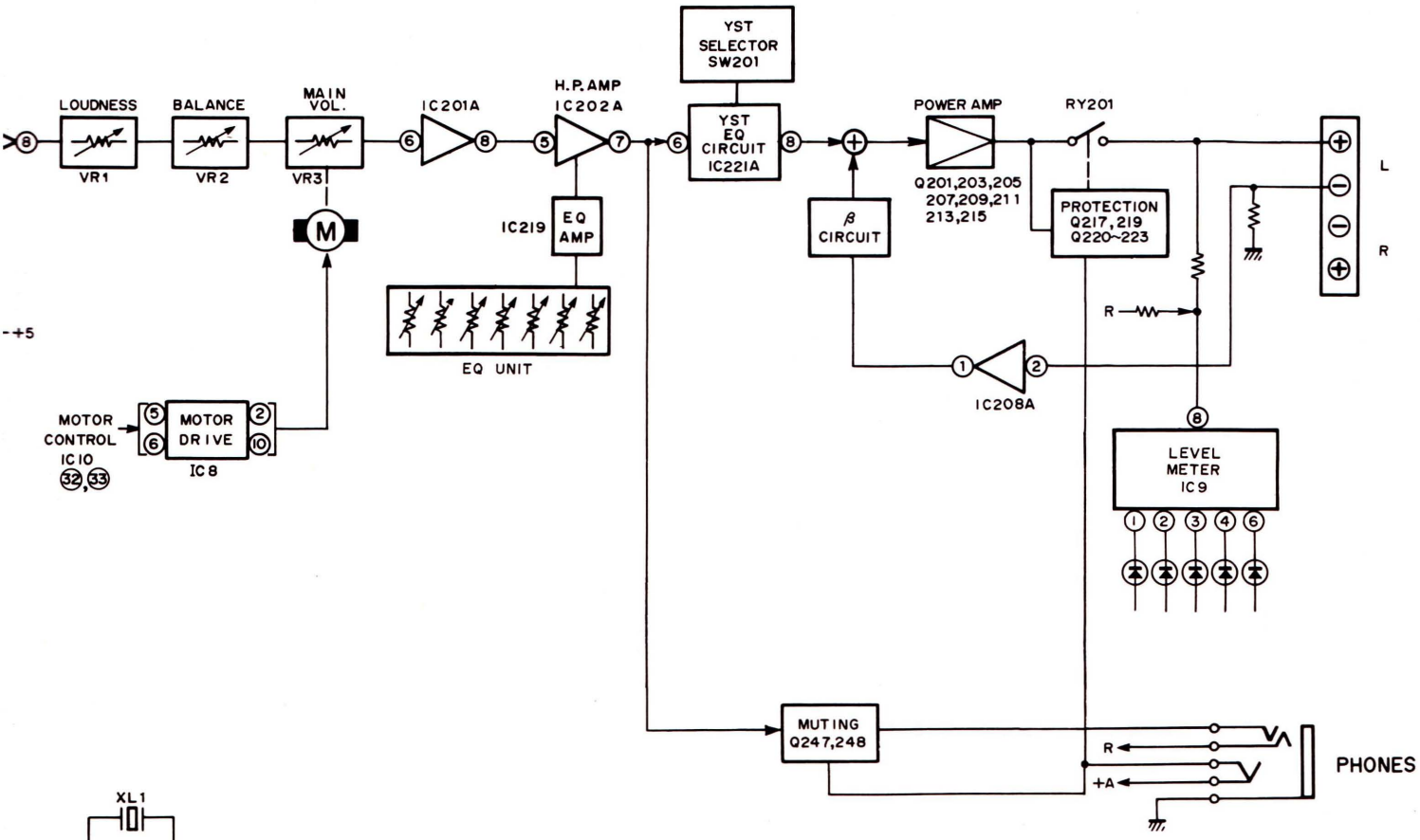
YST SELECTOR SW201
LOUDNESS
BALANCE
MAIN VOL.
VR1
VR2
VR3
IC201A
H.P. AMP IC202A
YST EQ CIRCUIT IC221A
POWER AMP
RY201
Q201,203,205 207,209,211 213,215
PROTECTION Q217,219 Q220~223
β CIRCUIT
IC219
EQ AMP
EQ UNIT
IC208A
MOTOR CONTROL IC10
MOTOR DRIVE
IC8
LEVEL METER IC9
MUTING Q247,248
PHONES
L
R
+A

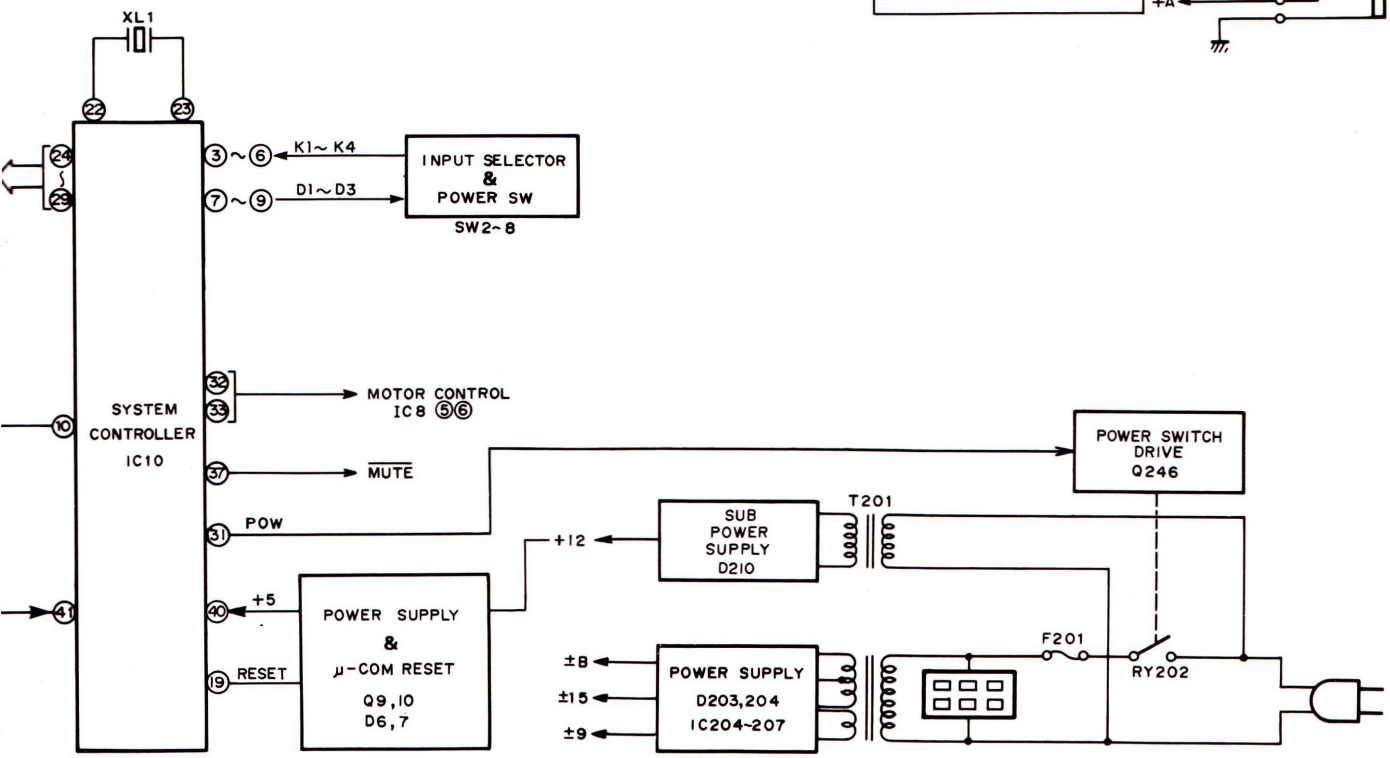
XL1
K1~K4
D1~D3
INPUT SELECTOR & POWER SW
SW2~8
SYSTEM CONTROLLER IC10
MOTOR CONTROL IC8
MUTE
POW
POWER SWITCH DRIVE Q246
SUB POWER SUPPLY D210
T201
+12
+5
POWER SUPPLY & μ-COM RESET Q9,10 D6,7
RESET
F201
RY202
±8
±15
±9
POWER SUPPLY D203,204 IC204~207

■ INTERNAL VIEW

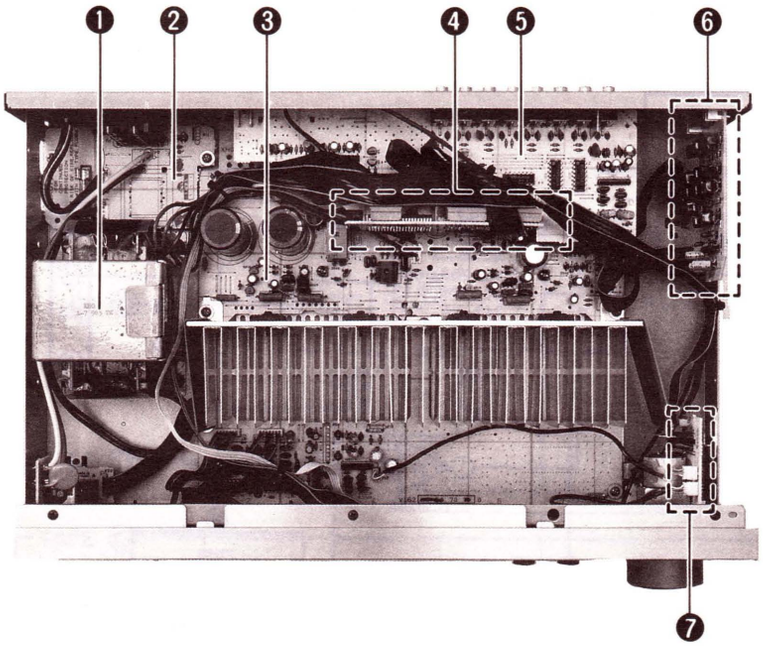

❶ POWER TRANSFORMER
❷ MAIN CIRCUIT BOARD (2)
❸ MAIN CIRCUIT BOARD (1)
❹ μ-COM CIRCUIT BOARD (9)
❺ μ-COM CIRCUIT BOARD (1)
❻ MAIN CIRCUIT BOARD (4)
❼ μ-COM CIRCUIT BOARD (3)

■ DISASSEMBLY PROCEDURES

(Remove parts in disassembly order as numbered.)

1. **Removal of Top Cover**
   Remove 5 screws (①) in Fig. 1, and slide the TOP Cover back.

2. **Removal of Front Panel**
   Remove 6 screws (②) in Fig. 1, and pull the Front Panel foward.

3. **Removal of Bottom Cover**
   Remove 4 screws (③) in Fig. 1.

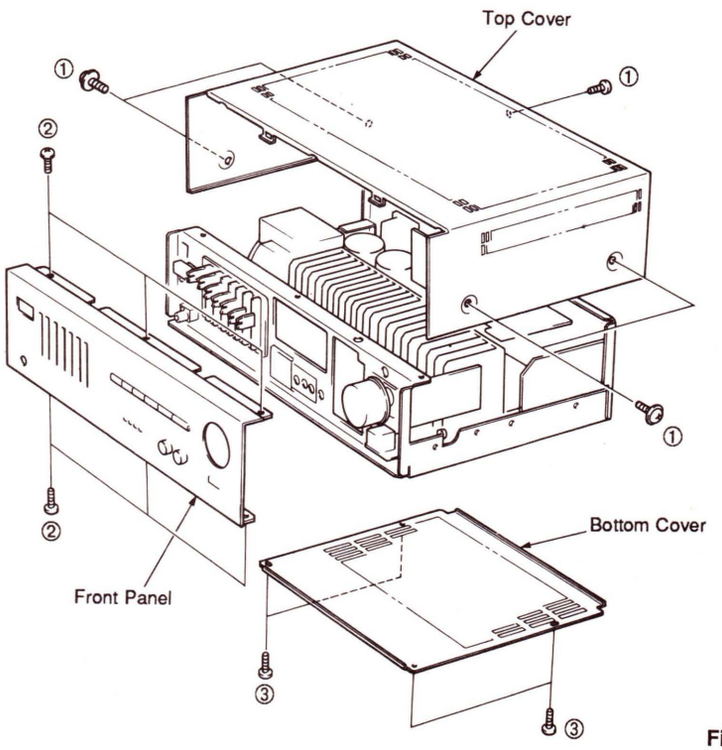

Fig. 1

• Installation of Top Cover

< Example of incorrect installation >

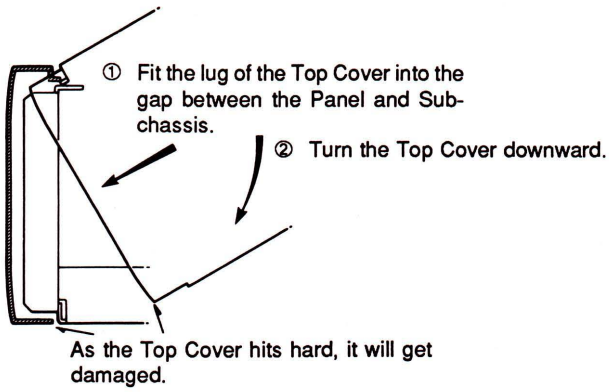

Fig. 2

< Example of correct installation >

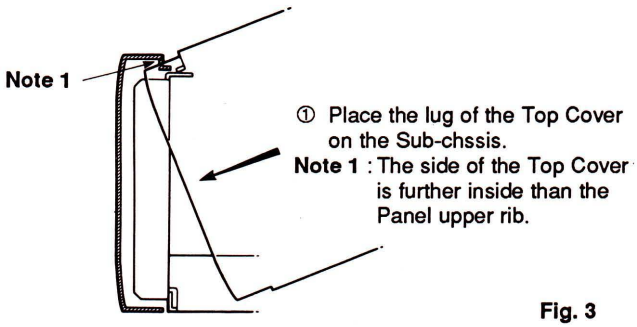

Fig. 3

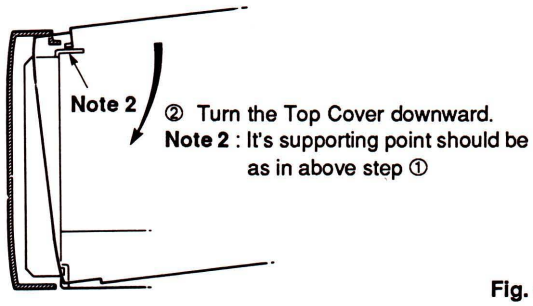

Fig. 4

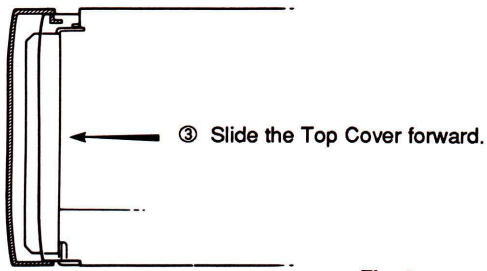

Fig. 5

■ ADJUSTMENTS

• Idling Adjustment

To stabilize operation of the amplifier, turn ON the power in the no-signal state and wait for two minutes before the adjustment.

Adjust VR201 (L ch) so that the voltage at both R255 (L ch) becomes DC1.5mV±0.3mV.

Adjust VR202 (R ch) so that the voltage at both R256 (R ch) becomes DC1.5mV±0.3mV.

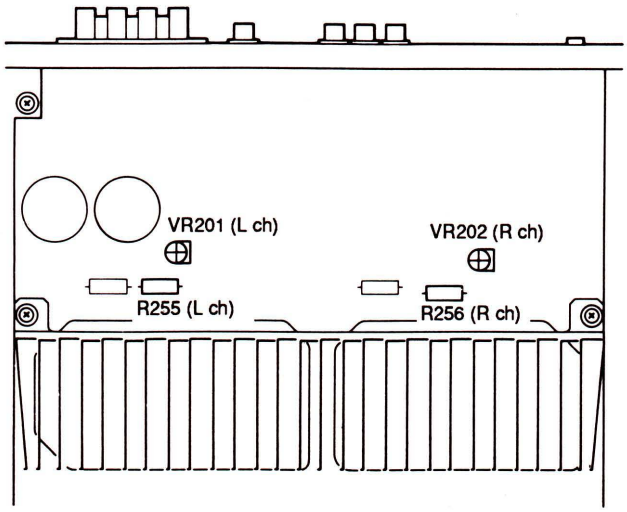

■ PRINTED CIRCUIT BOARD (Foil side)

Note) 文字面 : Component side

REMOTE CONTROL

PHONO

MAIN C. B (1)

● **Semiconductor Location**

Ref. No.	Location
D 201	D2
D 202	D3
D 203	G2
D 205	E3
D 206	F3
D 215	G3
D 216	D3
D 217	F2
IC201	F5
IC202	F5
IC203	D2
IC204	E2
IC205	E3
IC206	D2
IC207	D3
IC208	F2
IC219	G5

Ref. No.	Location
IC220	G5
IC221	B5
Q 201	D2
Q 202	C3
Q 203	C2
Q 204	C3
Q 205	D2
Q 206	D3
Q 207	E4
Q 208	E4
Q 209	G3
Q 210	D3
Q 211	G3
Q 212	D3
Q 213	F4
Q 214	D4
Q 215	G4

Ref. No.	Location
Q 216	E4
Q 217	G3
Q 218	E3
Q 219	G3
Q 220	F2
Q 221	F2
Q 222	F2
Q 223	F2
Q 224	E2
Q 226	F2
Q 227	E2
Q 229	F2
Q 230	D2
Q 232	C2
Q 237	C3
Q 238	C3

MAIN C. B (4)

— YST SELECTOR —

·CONVENTIONAL
·YST-1
·YST-2

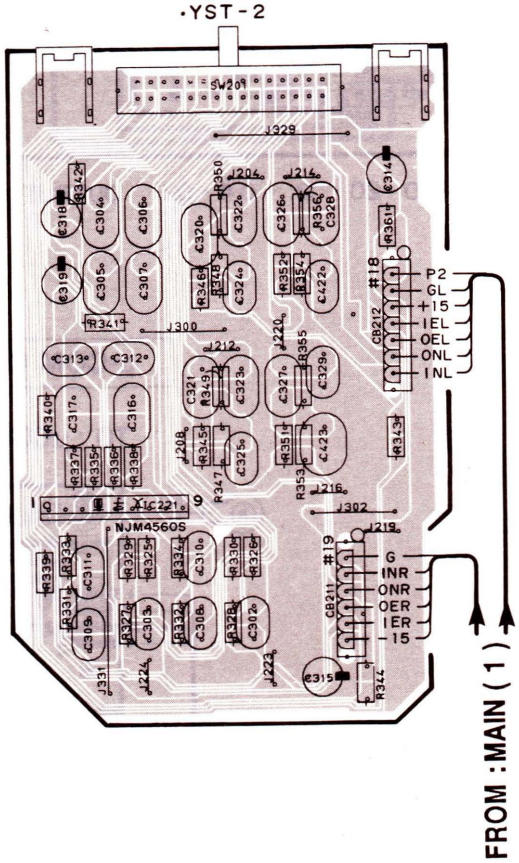

FROM : MAIN (1)

TO : MAIN (4)

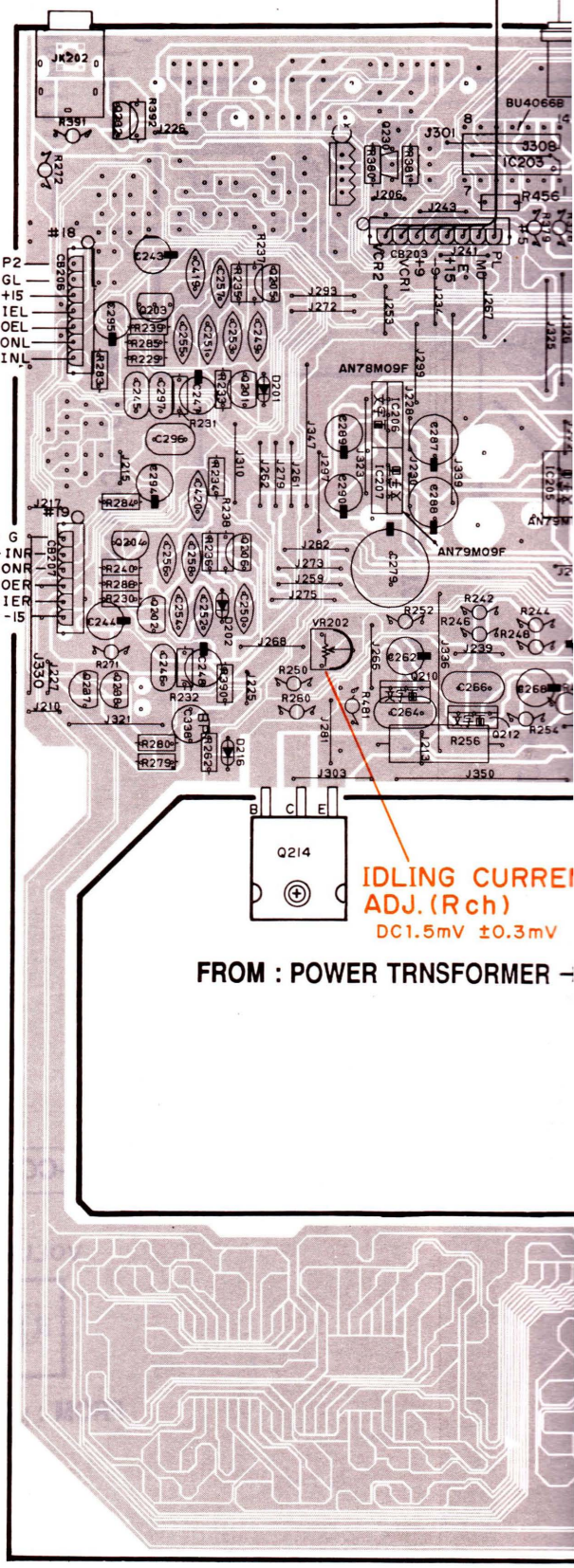

FROM : POWER TRNSFORMER

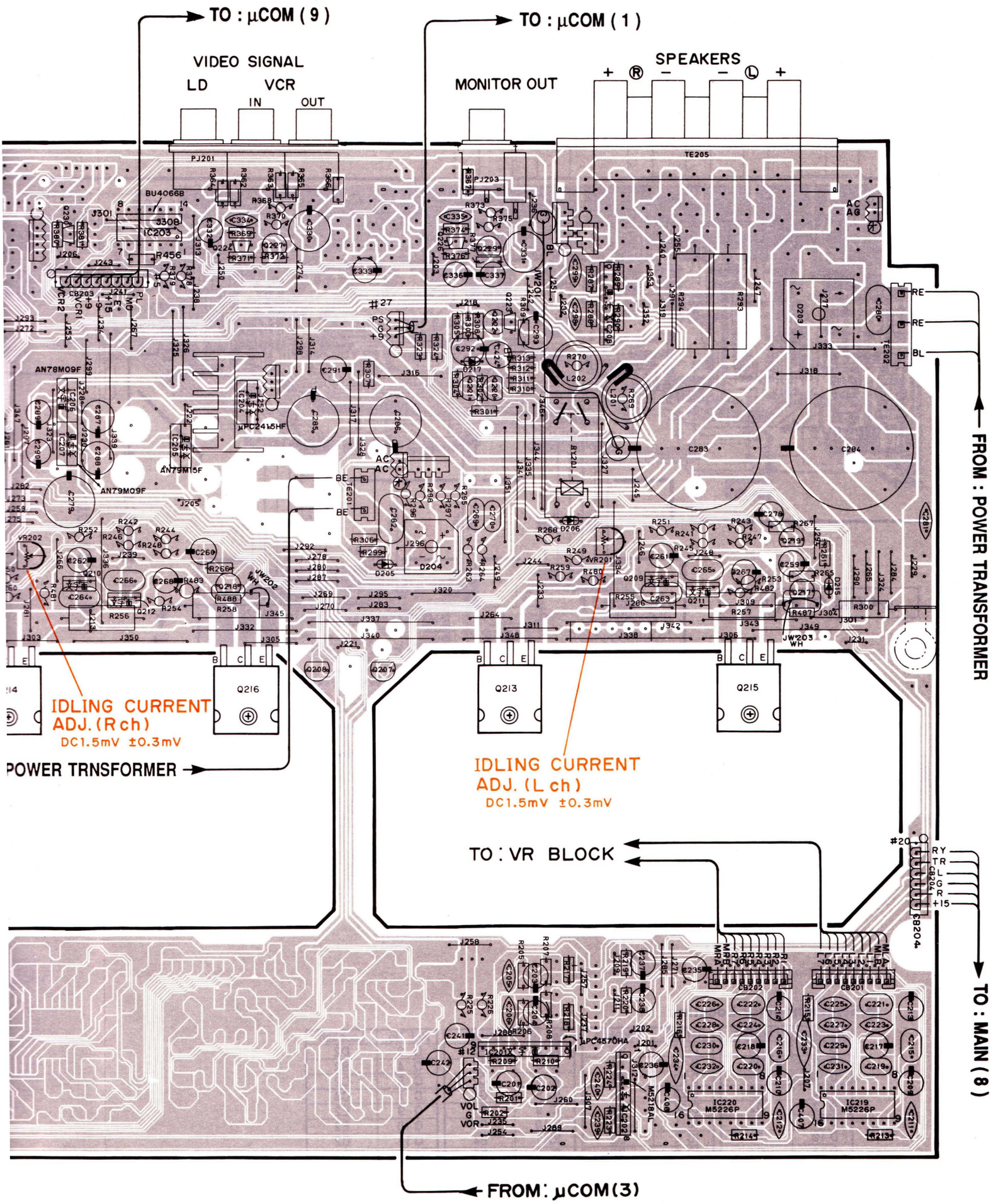
TO : µCOM (9)
TO : µCOM (1)
VIDEO SIGNAL
LD
VCR
IN
OUT
MONITOR OUT
SPEAKERS
+ ® −
− Ⓛ +
FROM : POWER TRANSFORMER
IDLING CURRENT
ADJ. (R ch)
DC1.5mV ±0.3mV
POWER TRNSFORMER
IDLING CURRENT
ADJ. (L ch)
DC1.5mV ±0.3mV
TO : VR BLOCK
TO : MAIN (8)
FROM : µCOM(3)
Q216
Q213
Q215
IC220
M5226P
IC219
M5226P
µPC4570HA
µPC2415HF
AN78M09F
AN79M09F
AN79M15F

■ PRINTED CIRCUIT BOARD (Foil side)

Note) 文字面 : Component side

①to④: WAVEFORM OF TEST POINT (See page 17)

μ-COM C. B (1)

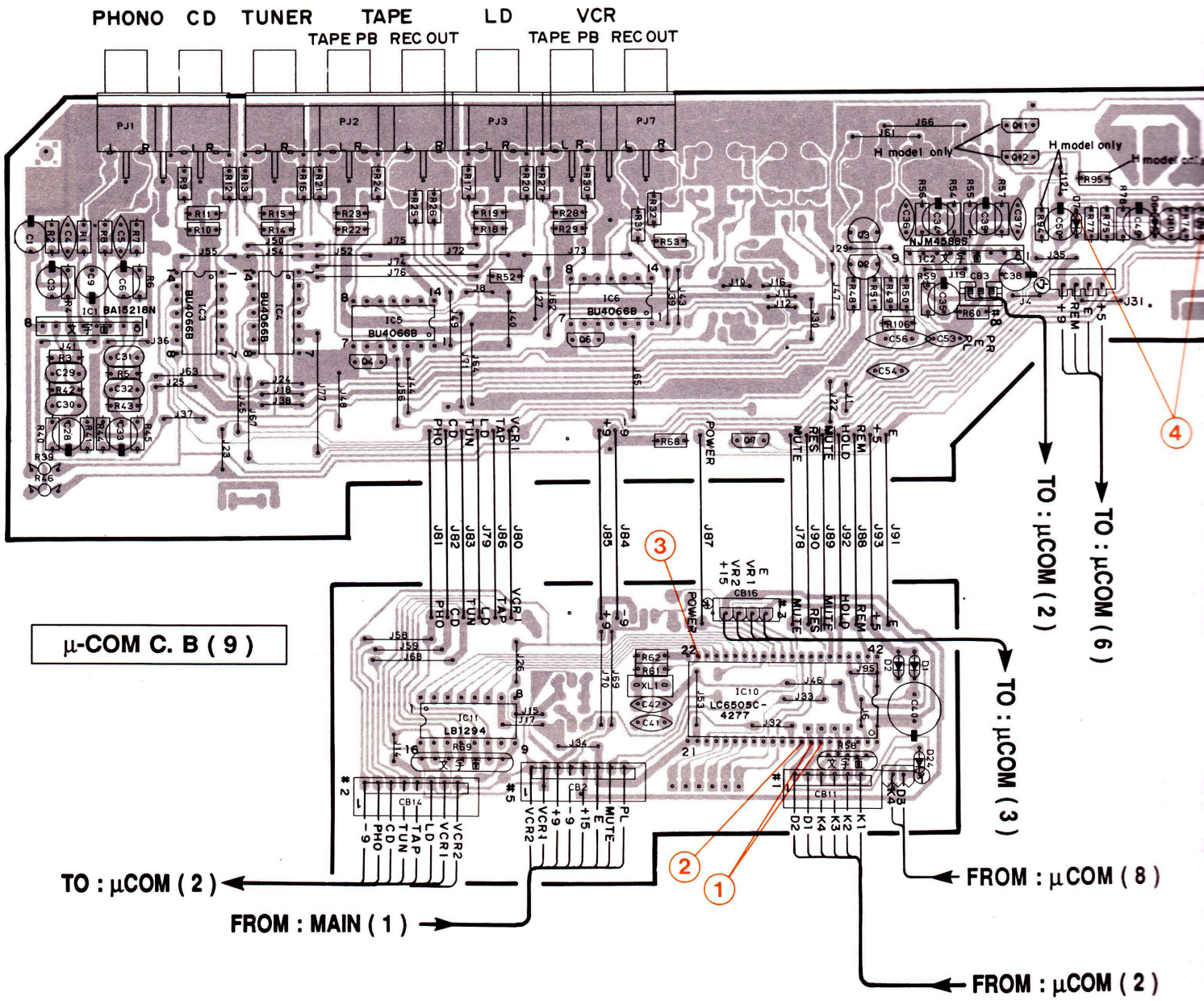

● Semiconductor Location

Ref. No.	Location	Ref. No.	Location	Ref. No.	Location	Ref. No.	Location
D 1	D3	D 14	G4	IC 4	B2	Q 3	D2
D 2	D3	D 15	F4	IC 5	B2	Q 4	B2
D 3	G2	D 20	F5	IC 6	C2	Q 5	C2
D 6	E2	D 23	G5	IC 8	G2	Q 7	C3
D 7	D2	D 24	D4	IC 9	F4	Q 9	E2
D 11	G4	IC 1	A2	IC10	C4	Q 10	E2
D 12	F4	IC 2	D2	IC11	B4	Q 11	D2
D 13	G4	IC 3	B2	Q 2	D2	Q 12	D2

B (1)

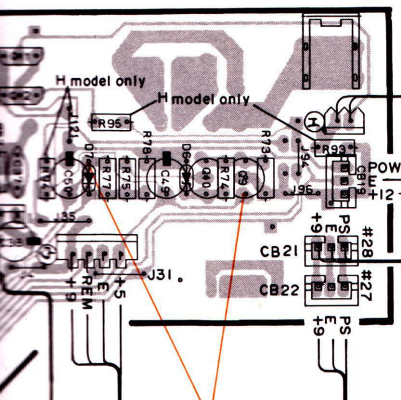

TO : µCOM (7)
(H model only)

FROM : MAIN (2)

TO : µCOM (4)

FROM : MAIN (1)

TO : µCOM (6)

TO : µCOM (2)

TO : µCOM (3)

OM : µCOM (8)

OM : µCOM (2)

µ-COM C. B (3)

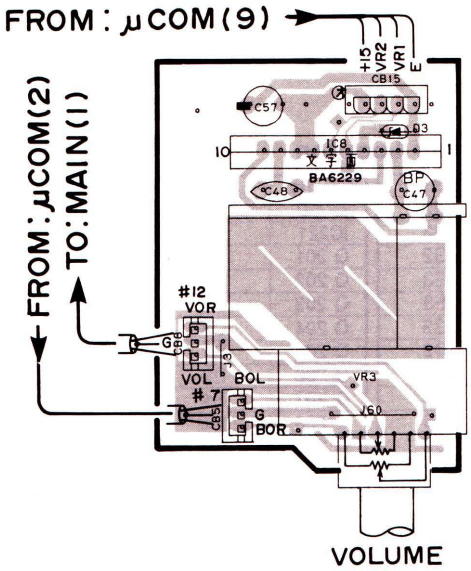

µ-COM C. B (4)

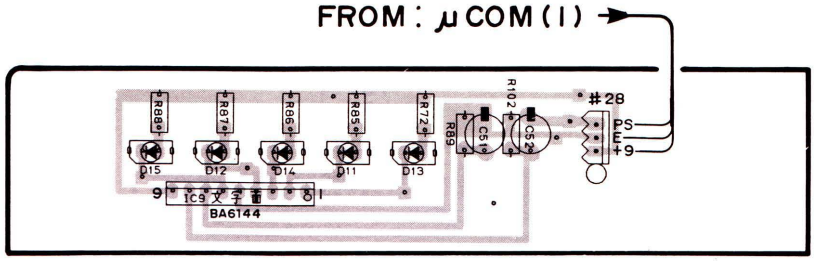

100 · 20 · 2 · 0.4 · 0.1 OUTPUT LEVEL

µ-COM C. B (5)

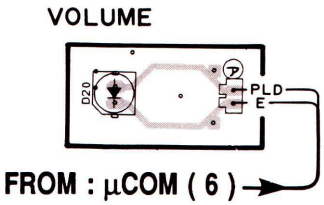

µ-COM C. B (6)

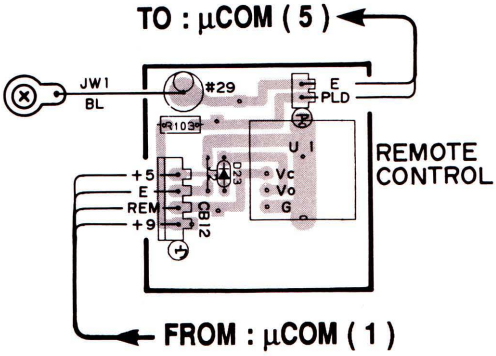

■ PRINTED CIRCUIT BOARD (Foil side)

Note) 文字面 : Component side

MAIN C. B (2)

● U, C models

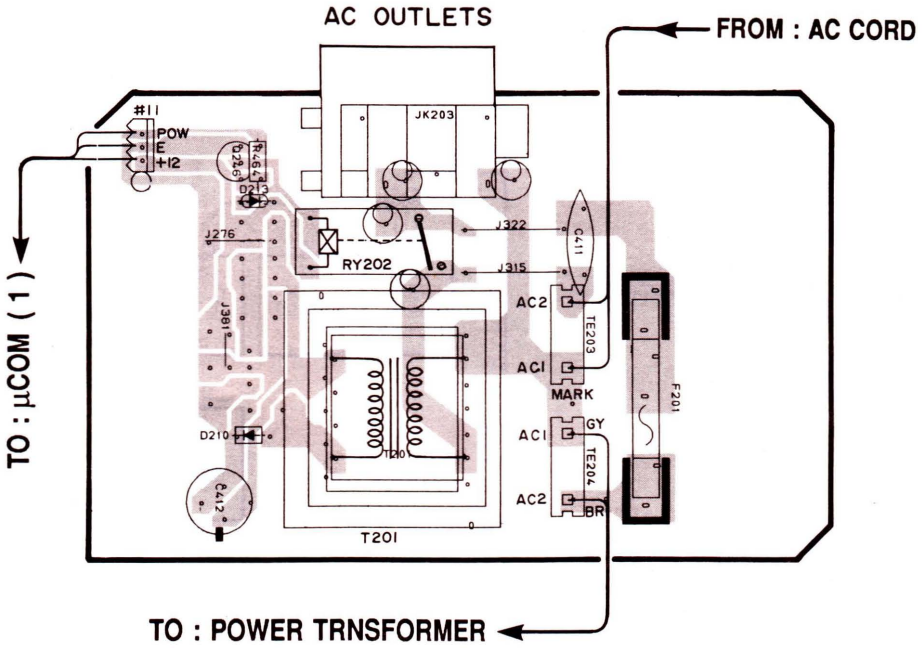

MAIN C. B (2)

● A, H models

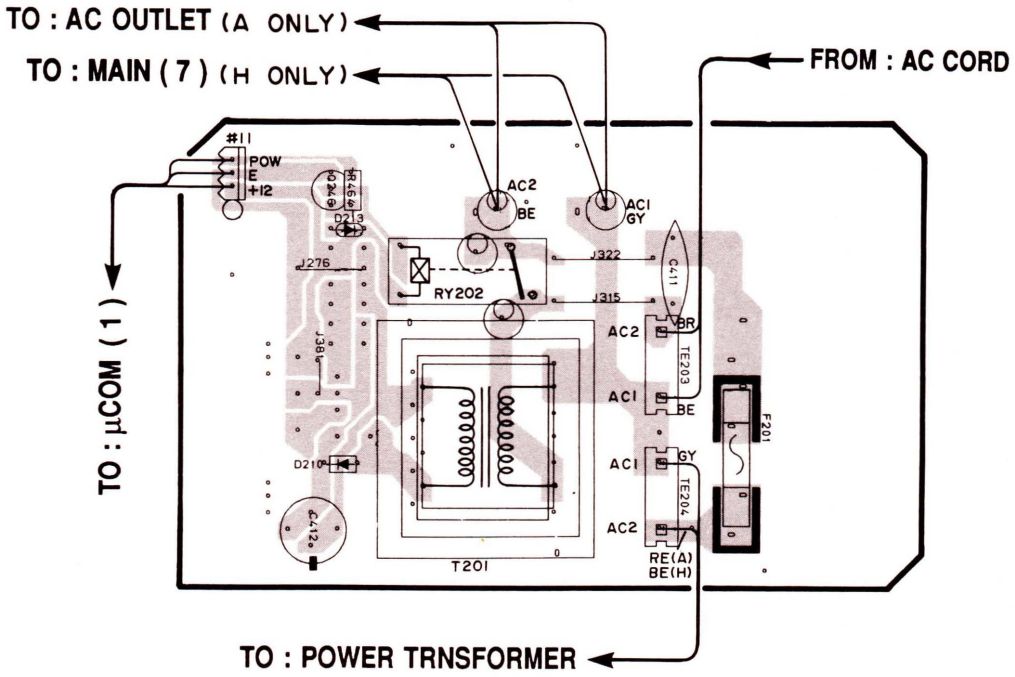

MAIN C. B (2)

● R model

MAIN C. B (6)

● R model

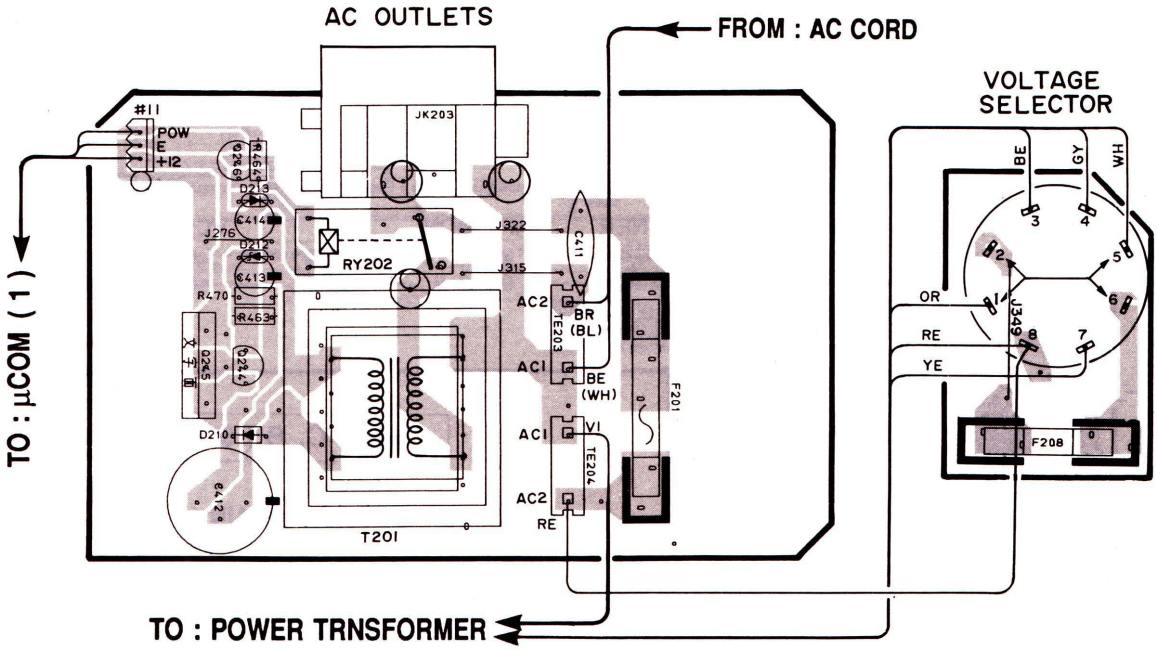

MAIN C. B (7)

● H model

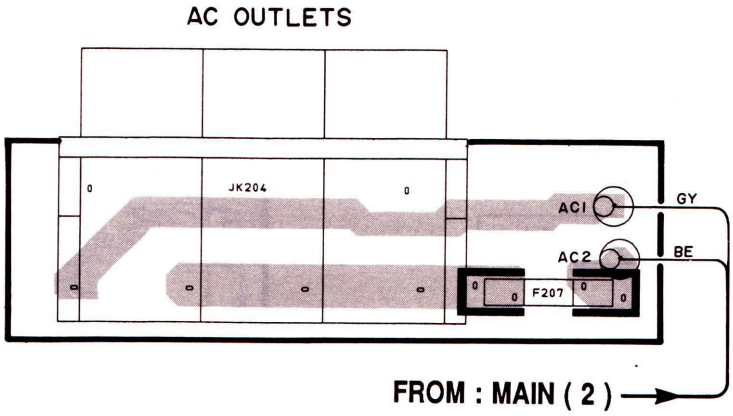

CORD

■ PRINTED CIRCUIT BOARD (Foil side)

Note) 文字面 : Component side

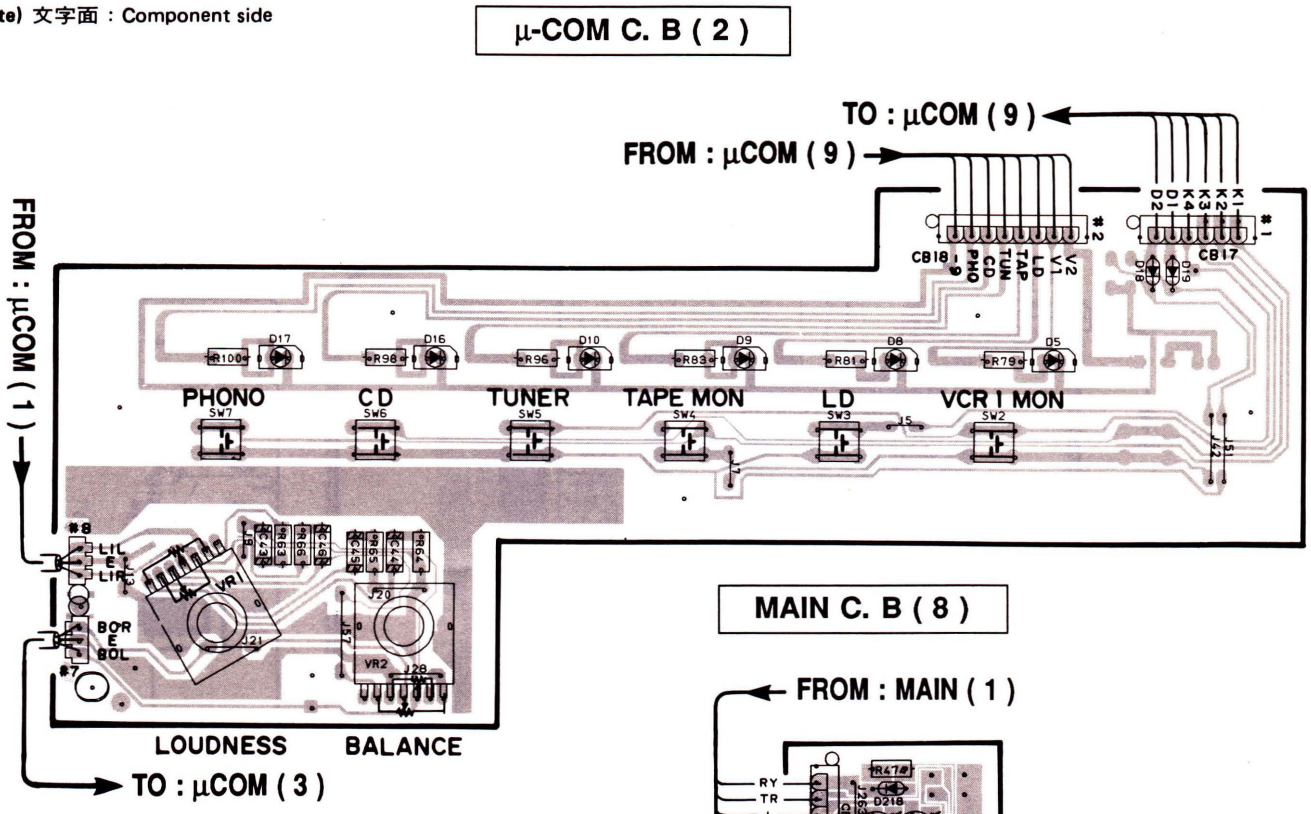

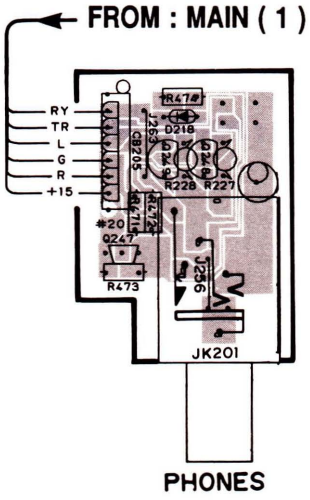

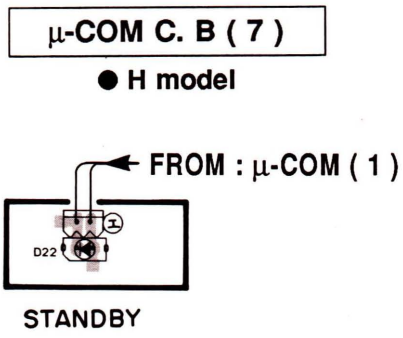

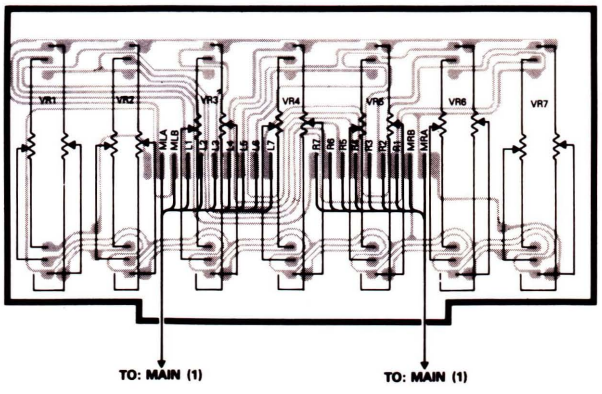

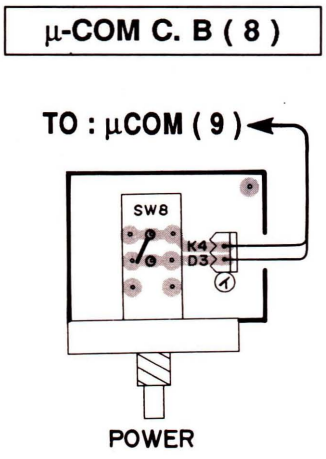

■ INTERCONNECT WIRING DIAGRAM

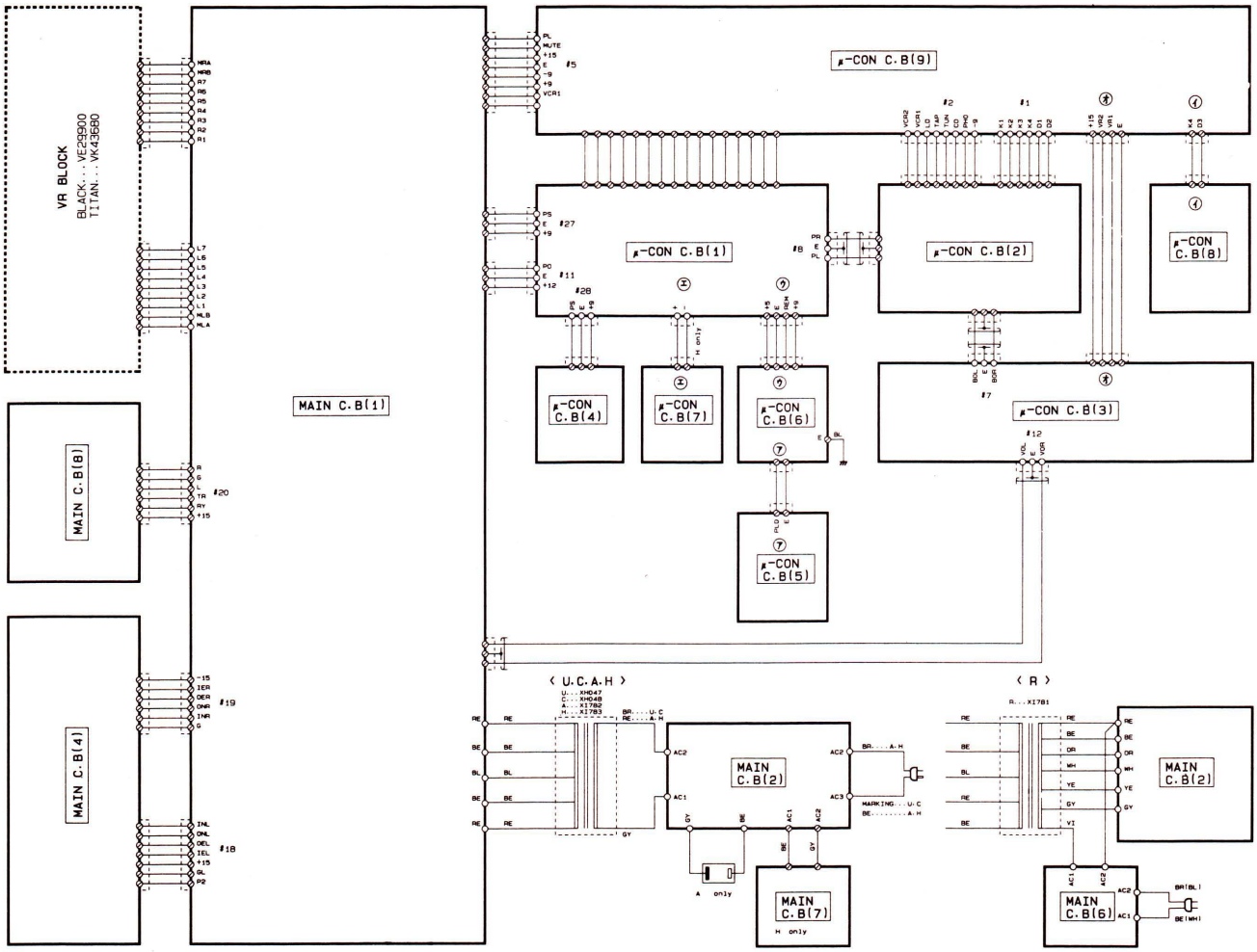

■ IC DATA

IC10 : LC6505C-4277
4 bit μ-COM

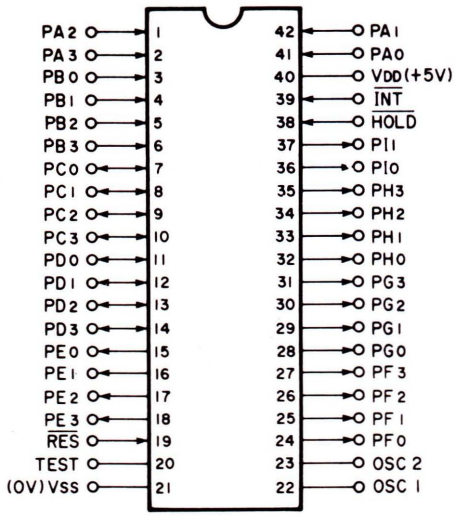

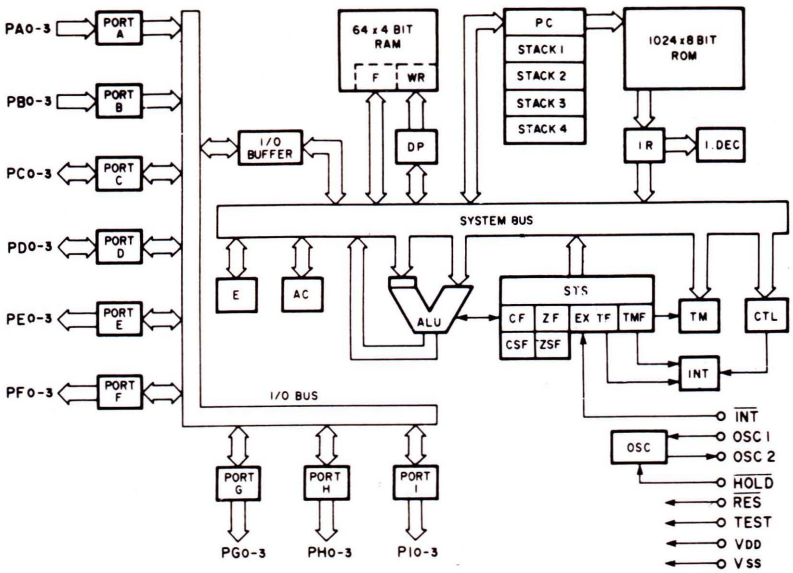

Pin No.	Name	I/O	Function	Pin No.	Name	I/O	Function
1	PA2	I	Not used	24	PF0	O	PHONO } Function control (H : ON, L : OFF)
2	PA3	I	H level (TAPE MON)	25	PF1	O	CD
3	PB0	I	K1 } Key input (H : ON)	26	PF2	O	TUNER
4	PB1	I	K2	27	PF3	O	VDP
5	PB2	I	K3	28	PG0	O	TAPE
6	PB3	I	K4	29	PG1	O	VCR
7	PC0	I/O	D1 } Key scan signal (H : Active)	30	PG2	O	Not used
8	PC1	I/O	D2	31	PG3	O	Power control signal (H : ON)
9	PC2	I/O	D3	32	PH0	O	Volume Up control signal
10	PC3	I/O	PLO PHONO PLAY/CUT Control signal	33	PH1	O	Volume Down control signal
11	PD0	I/O	Not used	34	PH2	O	TU2 } Tuner control signal (Not used)
12	PD1	I/O	CD0 } CD control signal (Not used)	35	PH3	O	TU1
13	PD2	I/O	CD1	36	PI0	O	$\overline{\text{AMUTE}}$ Audio Muting control signal (L : Active) (Not used)
14	PD3	I/O	CD2				
15	PE0	I/O	TP0 } DECK control signal (Not used)	37	PI1	O	$\overline{\text{MUTE}}$ Muting control signal (L : Active)
16	PE1	O	TP1	38	$\overline{\text{HOLD}}$	I	μ-COM Back up control (L : Back up, H : Active)
17	PE2	O	TP2				
18	PE3	O	TP3	39	$\overline{\text{INT}}$	I	+5V
19	$\overline{\text{RES}}$	O	Reset input	40	VDD	—	+5V
20	TEST	I	LSI test terminal (GND)	41	PA0	I	Remote control Data input
21	VSS	—	GND	42	PA1	I	Power ON/OFF back up (H : Back up, L : Ever ON)
22	OSC1	—	μ-COM clock circuit 400kHz				
23	OSC2	I					

■ WAVEFORM OF TEST POINT

Point ①: D1, D2

(Pin 7 and 8 of IC10)

V : 2V/div H : 2msec/div
DC range 1 : 1 probe

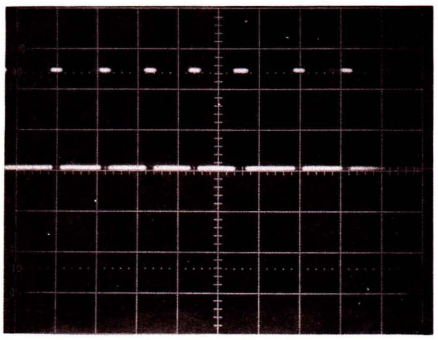

Point ②: D3

(Pin 9 of IC10)

V : 2V/div H : 2msec/div
DC range 1 : 1 probe

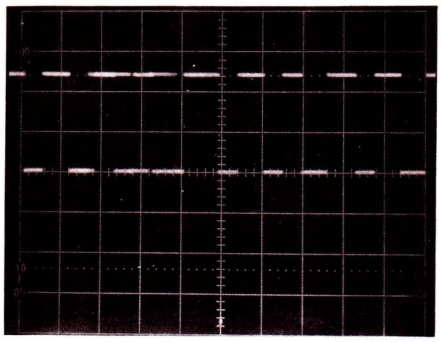

Point ③: OSC

(Pin 23 of IC10)

V : 2V/div H : 2μsec/div
DC range 1 : 1 probe

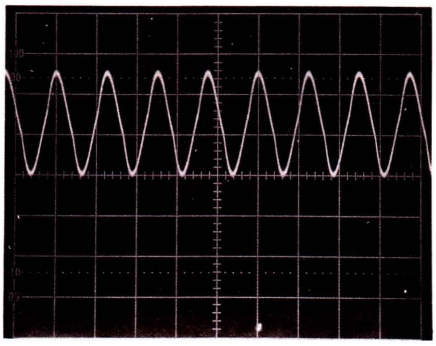

Point ④: +5, $\overline{\text{RES}}$

(CH 1 : Emitter of Q9 CH 2 : Pin 19 of IC10)

V : 2V/div H : 200msec/div
DC range 1 : 1 probe

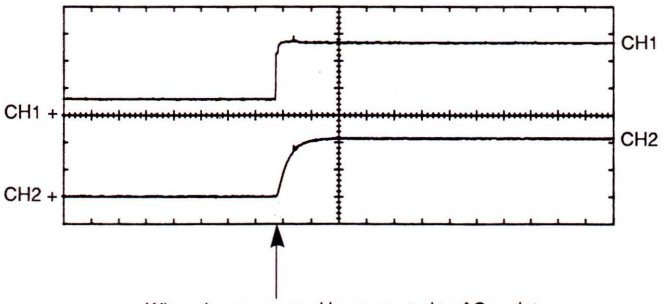

When the power cord is connected to AC outlet.
(This waveform is not available by the power switch ON.)

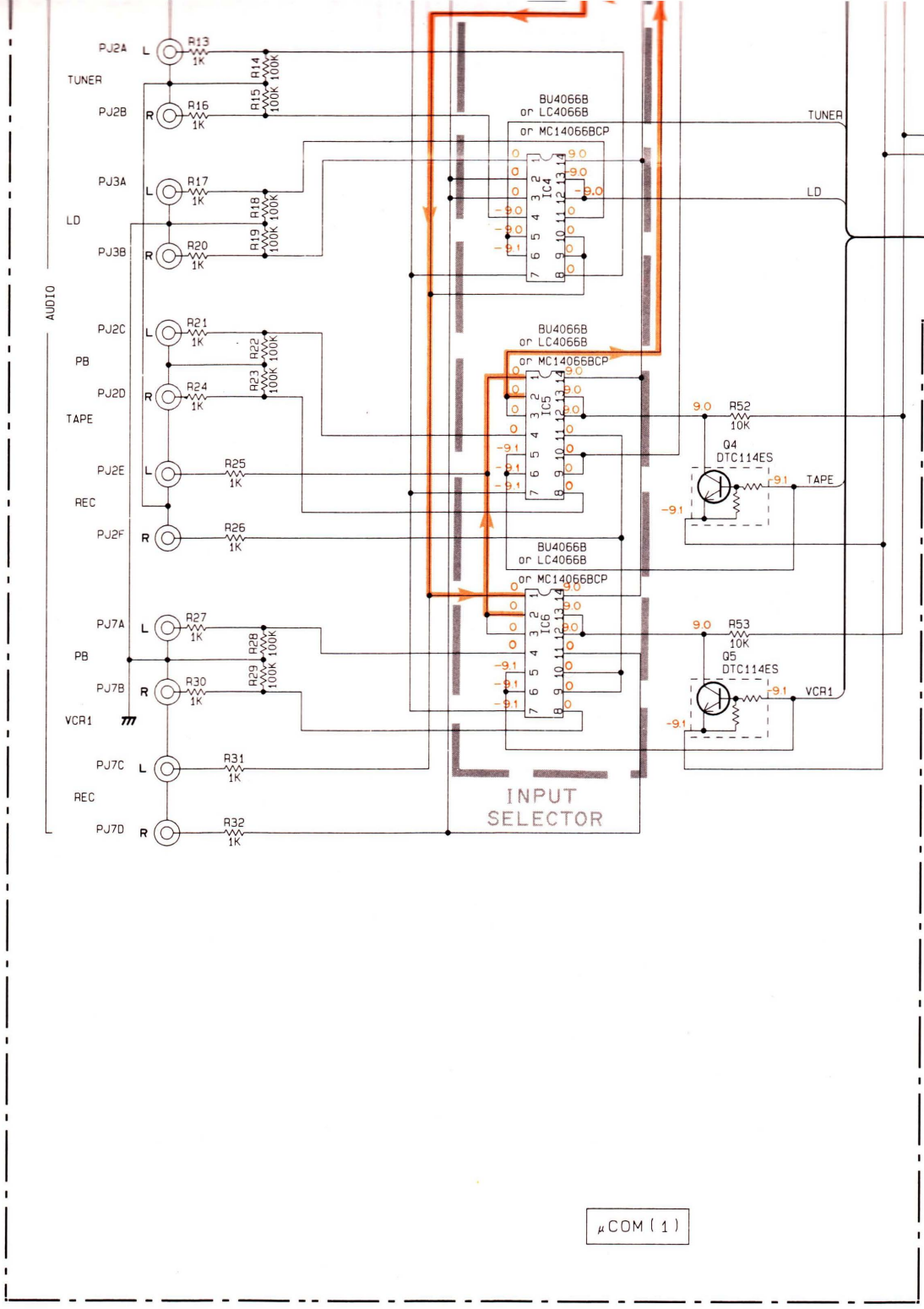

CAPACITOR

REMARKS	PARTS NAME	
NO MARK	ELECTROLYTIC CAPACITOR	⫼
⊗	TANTALUM CAPACITOR	
NO MARK	CERAMIC CAPACITOR	⫼
◉	AXIAL READ CERAMIC CAPACITOR	
◎	POLYESTEL FILM CAPACITOR	
○	POLYSTYRENE FILM CAPACITOR	
Ⓘ	MICA CAPACITOR	
Ⓟ	POLYPROPYLENE FILM CAPACITOR	
⊕	SEMICONDUCTIVE CERAMIC CAPACITOR	

RESISTOR

REMARKS	PARTS NAME
NO MARK	CARBON FILM RESISTOR (1/6W)
⧄	CARBON FILM RESISTOR (1/4W)
△	METAL OXIDE FILM RESISTOR
⊜	METAL FILM RESISTOR
⊠	METAL PLATE RESISTOR
◪	FIRE PROOF CARBON FILM RESISTOR
□	CEMENT MOLDED RESISTOR
⊘	SEMI VARIABLE RESISTOR
▤	CHIP RESISTOR

PIN CONNECTION DIAGRAM OF TRANSISTORS, DIODES AND ICS.

2SA1015(Y) 2SC1740S(S, R) 2SC2603(E, F) 2SC3311A(Q, R, S) 2SC2878(A, B) DTC144ES 2SC2060(P, Q, R) DTA114ES	1SS133 MTZJ5.6A MTZJ5.6B	M5218LV BA15218N	NJM4558S BA6144	BA6229	LC4066B BU4066B MC14066BCP	LB1294

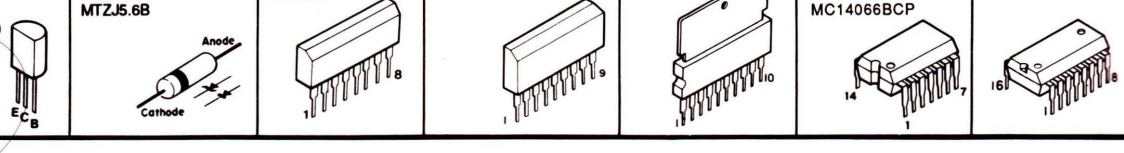

■ SCHEMATIC DIAGRAM

Condition : Set the Input selector to CD position.

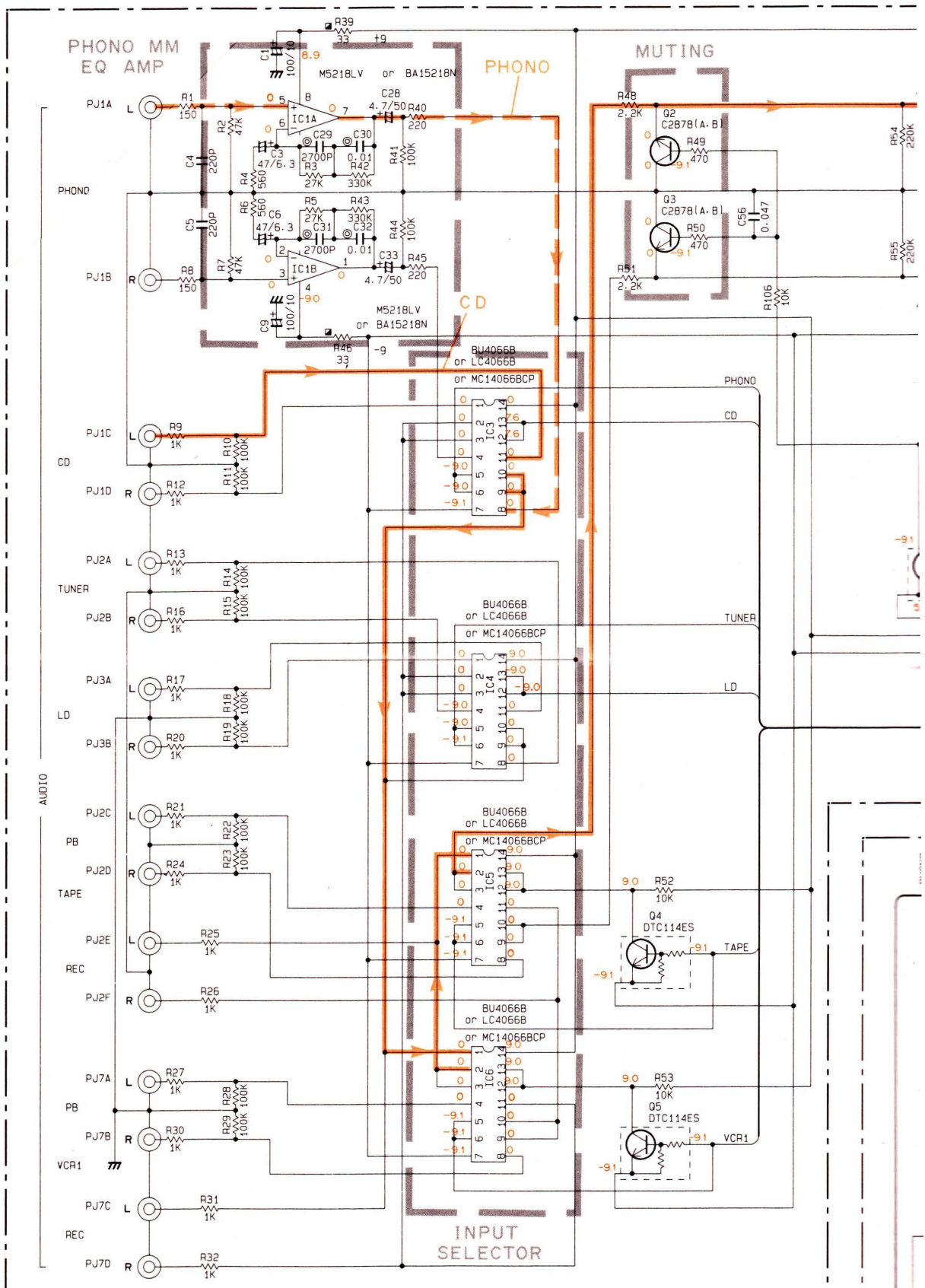

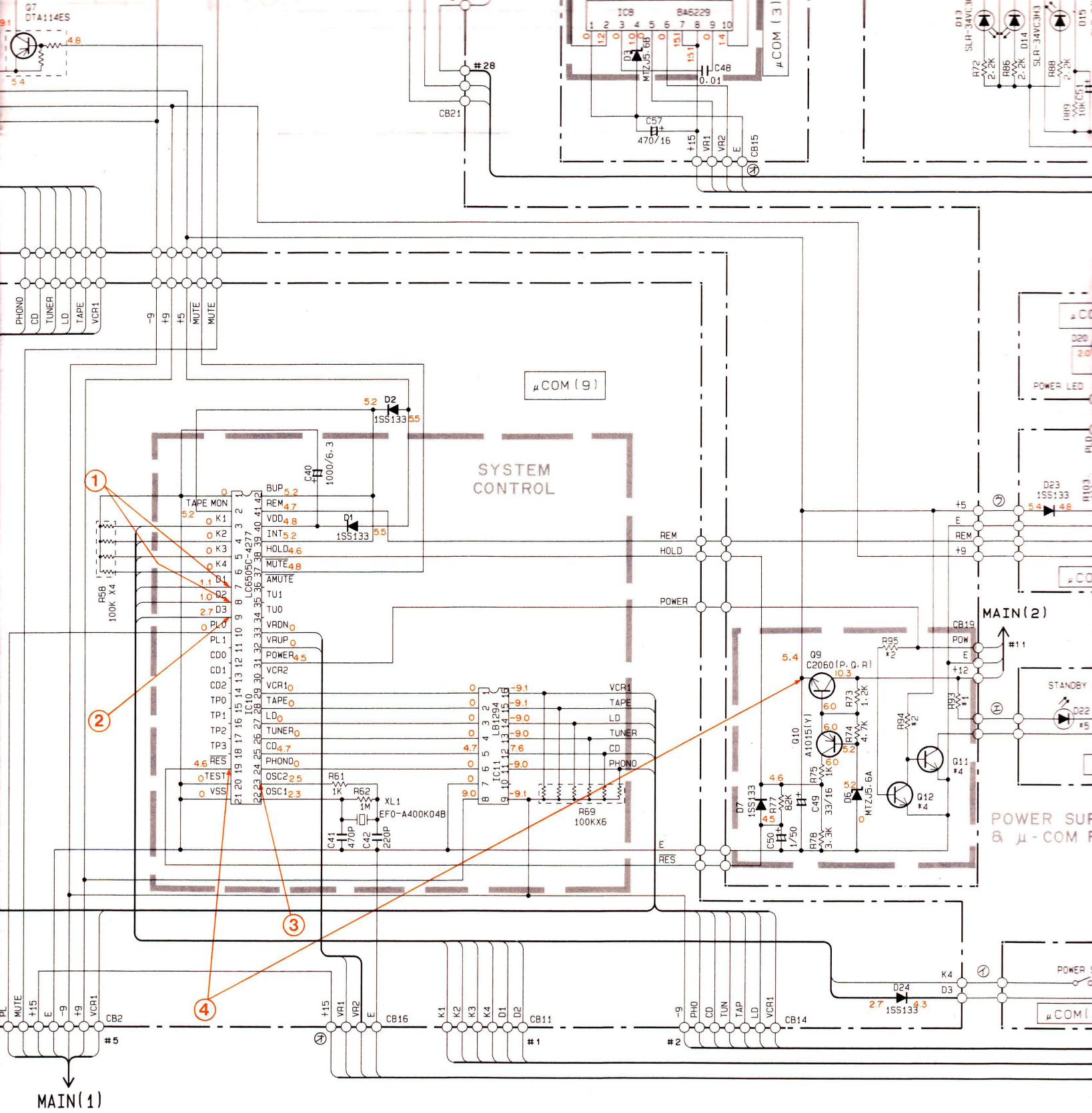

TICE
····· Japanese model
····· U.S.A model
····· Canadian model
····· Australian model
····· European model
····· British model
····· General model
····· RP model

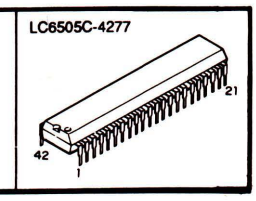

IC1 : BA15218N or M5218L (V)
Dual Ope-amp

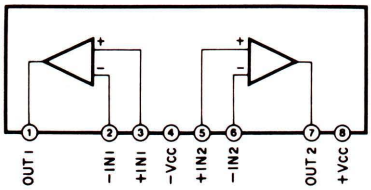

IC2 : NJM4558S
Dual Ope-amp

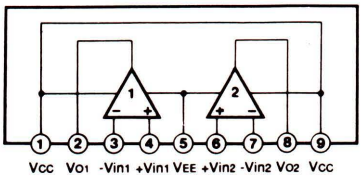

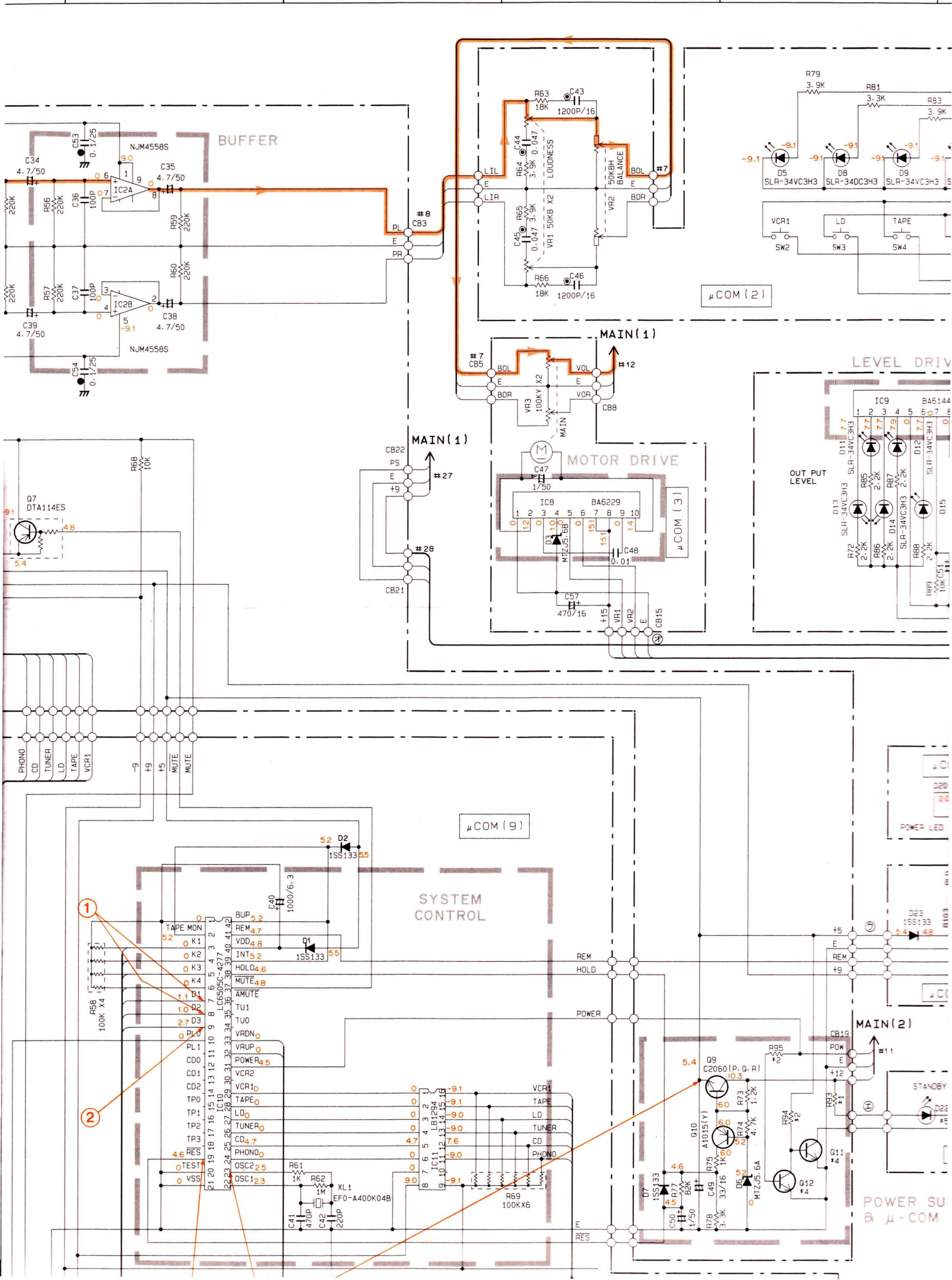
E
F
G
H
BUFFER
NJM4558S
IC2A
IC2B
C34 4.7/50
C35 4.7/50
C38 4.7/50
C39 4.7/50
C53 0.1/25
C54 0.1/25
R56 220K
R57 220K
R58 220K
R59 220K
R60 220K
C36 100P
C37 100P
#8
CB3
PL
E
PR
R63 18K
C43 1200P/16
R64 3.9K
C44 0.047
LOUDNESS
R65 3.9K
C45 0.047
R66 18K
C46 1200P/16
VR1 50KB X2
VR2 50KB BALANCE
LIL
LIR
BOL
BOR
#7
R79 3.9K
R81 3.3K
R83 3.9K
D5 SLR-34VC3H3
D8 SLR-34DC3H3
D9 SLR-34VC3H3
VCR1
LD
TAPE
SW2
SW3
SW4
μCOM (2)
MAIN(1)
#7
CB5
BOL
E
BOR
VR3 100KY X2
VOL
VOR
#12
CB8
MAIN
MOTOR DRIVE
C47 1/50
IC8 BA6229
D3 MTZJ5.6B
C48 0.01
C57 470/16
+15
VR1
VR2
E
CB15
μCOM (3)
CB22
PS
E
+9
#27
#28
CB21
LEVEL DRIV
IC9 BA6144
D11 SLR-34VC3H3
D12 SLR-34VC3H3
D13 SLR-34VC3H3
D14 SLR-34VC3H3
D15
R85 2.2K
R87 2.2K
R72 2.2K
R86 2.2K
R88 2.2K
R89 10K
C51
OUT PUT LEVEL
R68 10K
Q7 DTA114ES
PHONO
CD
TUNER
LD
TAPE
VCR1
-9
+9
+5
MUTE
MUTE
μCOM (9)
SYSTEM CONTROL
D2 1SS133
D1 1SS133
C40 1000/6.3
IC10 LC6505C-4277
BUP
REM
VDD
INT
HOLD
MUTE
AMUTE
TU1
TU0
VRDN
VRUP
POWER
VCR2
VCR1
TAPE
LD
TUNER
CD
PHONO
OSC2
OSC1
TAPE MON
K1
K2
K3
K4
B1
B2
B3
PL0
PL1
CD0
CD1
CD2
TP0
TP1
TP2
TP3
RES
TEST
VSS
R58 100K X4
R61 1K
R62 1M
XL1 EFO-A400K04B
C41 470P
C42 220P
IC11 LB1294
R69 100KX6
REM
HOLD
POWER
E
RES
+5
+9
+12
CB19
POW
MAIN(2)
#11
Q9 C2060(P.Q.R)
Q10 A1015(Y)
R73 1.2K
R74 4.7K
R75 1K
R77 82K
R78 3.3K
C49 33/16
C50 1/50
D6 MTZJ5.6A
D7 1SS133
R95 *2
R94 *2
R93 *1
Q11 *4
Q12 *4
D23 1SS133
STANDBY
POWER LED
POWER SU
& μ-COM
1
2

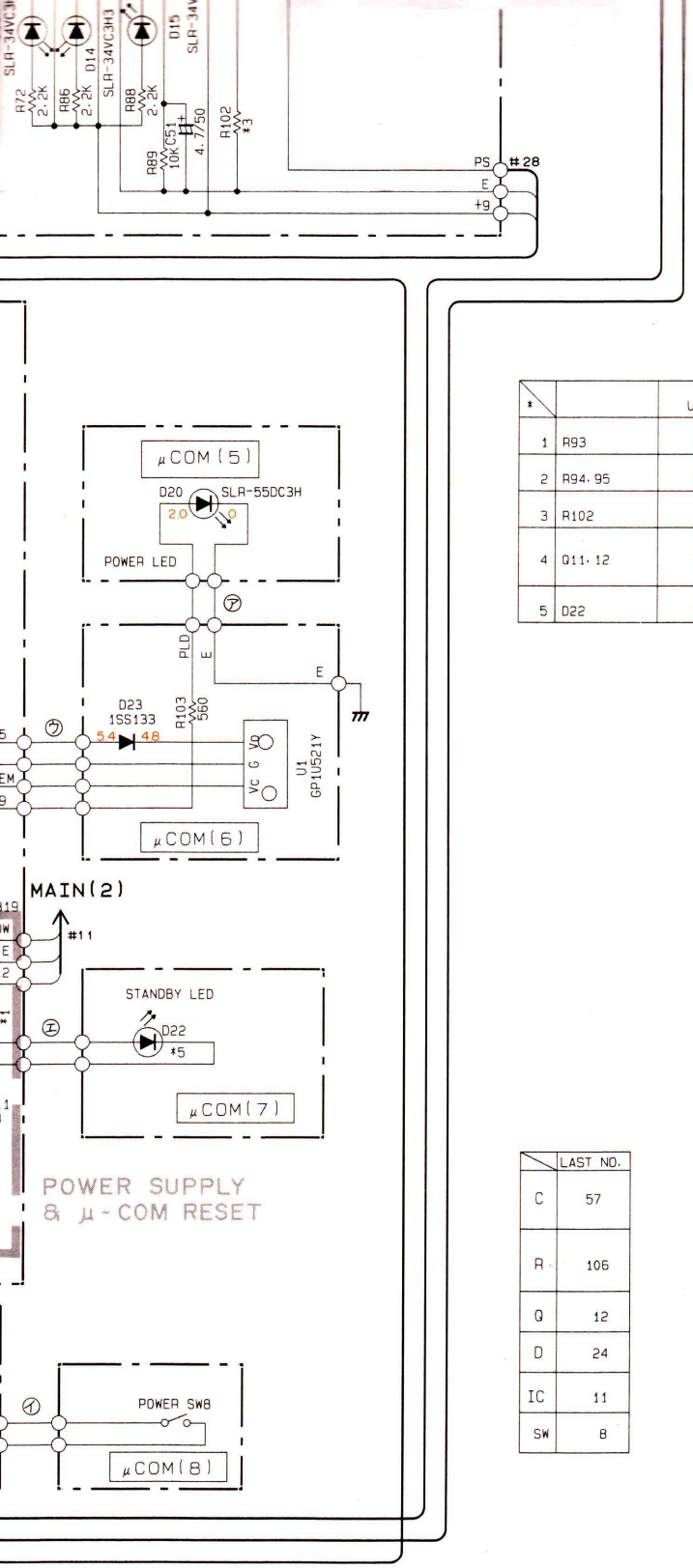

*		U.C.R.A	H
1	R93	OPEN	3.3K
2	R94.95	OPEN	4.7K
3	R102	470	620
4	Q11.12	OPEN	2SC1740S(R.S) 2SC2603(E.F) 2SC3311A(Q.R.S)
5	D22	OPEN	SLR-34VC3H3

	LAST NO.
C	57
R	106
Q	12
D	24
IC	11
SW	8

IC8 : BA6229
Motor Drive

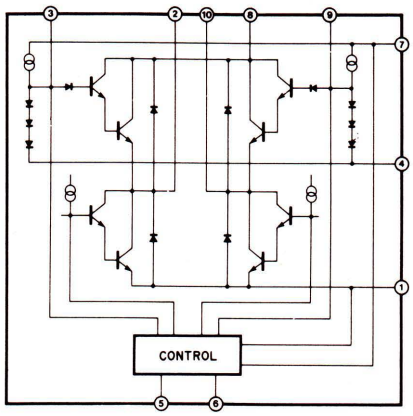

IC11 : LB1294
LED Drive

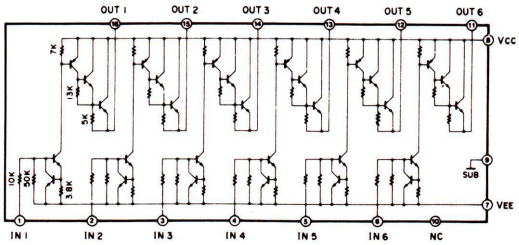

IC9 : BA6144
Level Meter Drive

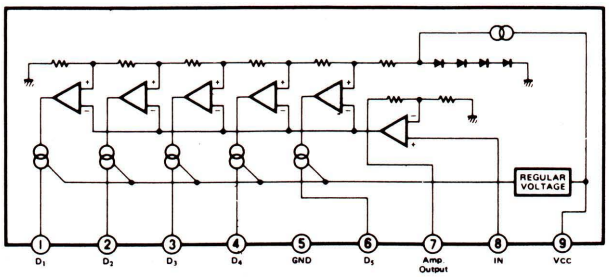

IC3~6 : LC4066B, MC14066BCP or BU4066B
Quad Bilateral Switch

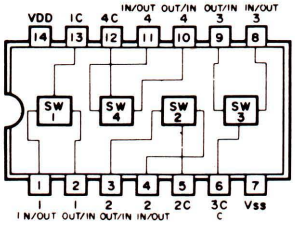

** All voltage are measured with a 10MΩ/V DC electric volt meter.*
** Components having special characteristics are marked ⚠ and must be replaced with parts having specifications equal to those originally installed.*
** Schematic diagram is subject to change without notice.*

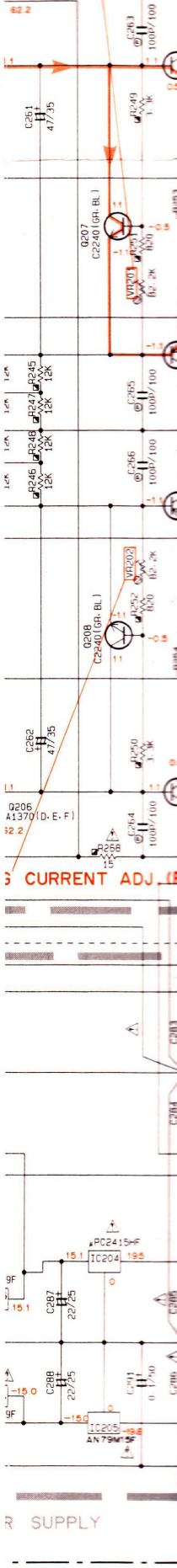

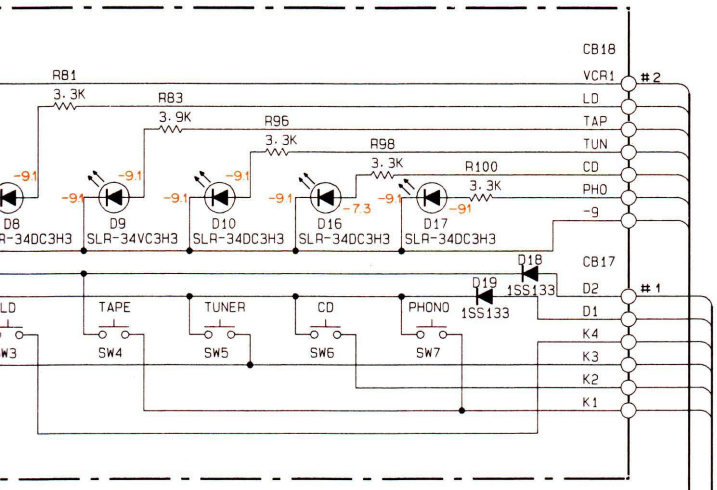

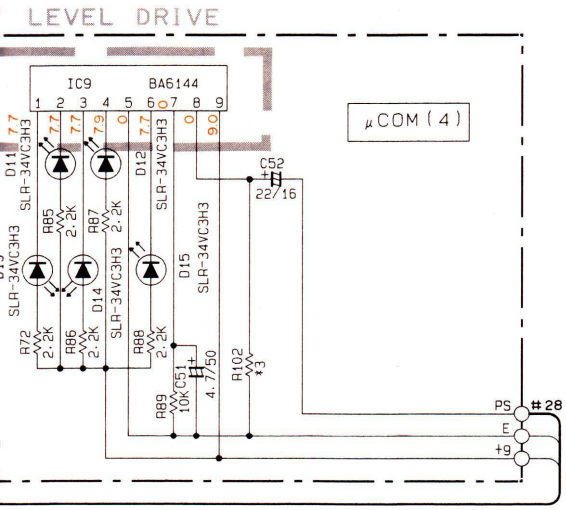

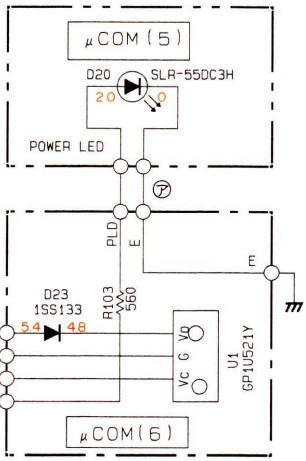

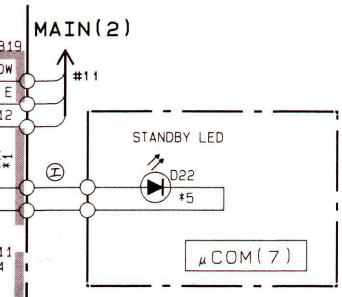

POWER SUPPLY
& μ-COM RESET

*		U.C.R.A	H
1	R93	OPEN	3.3K
2	R94.95	OPEN	4.7K
3	R102	470	620
4	Q11.12	OPEN	2SC1740S(R.S) 2SC2603(E.F) 2SC3311A(Q.R.S)
5	D22	OPEN	SLR-34VC3H3

	LAST NO.
C	57
R	105

IC8 : BA6229
Motor Drive

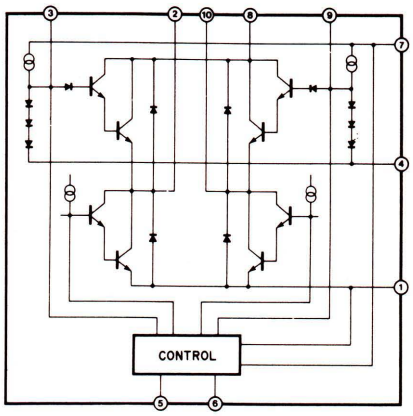

IC11 : LB1294
LED Drive

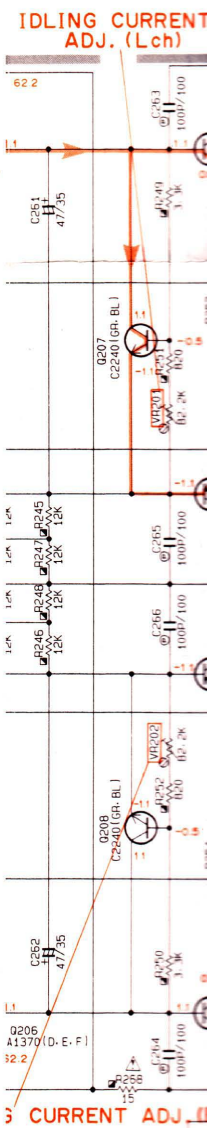

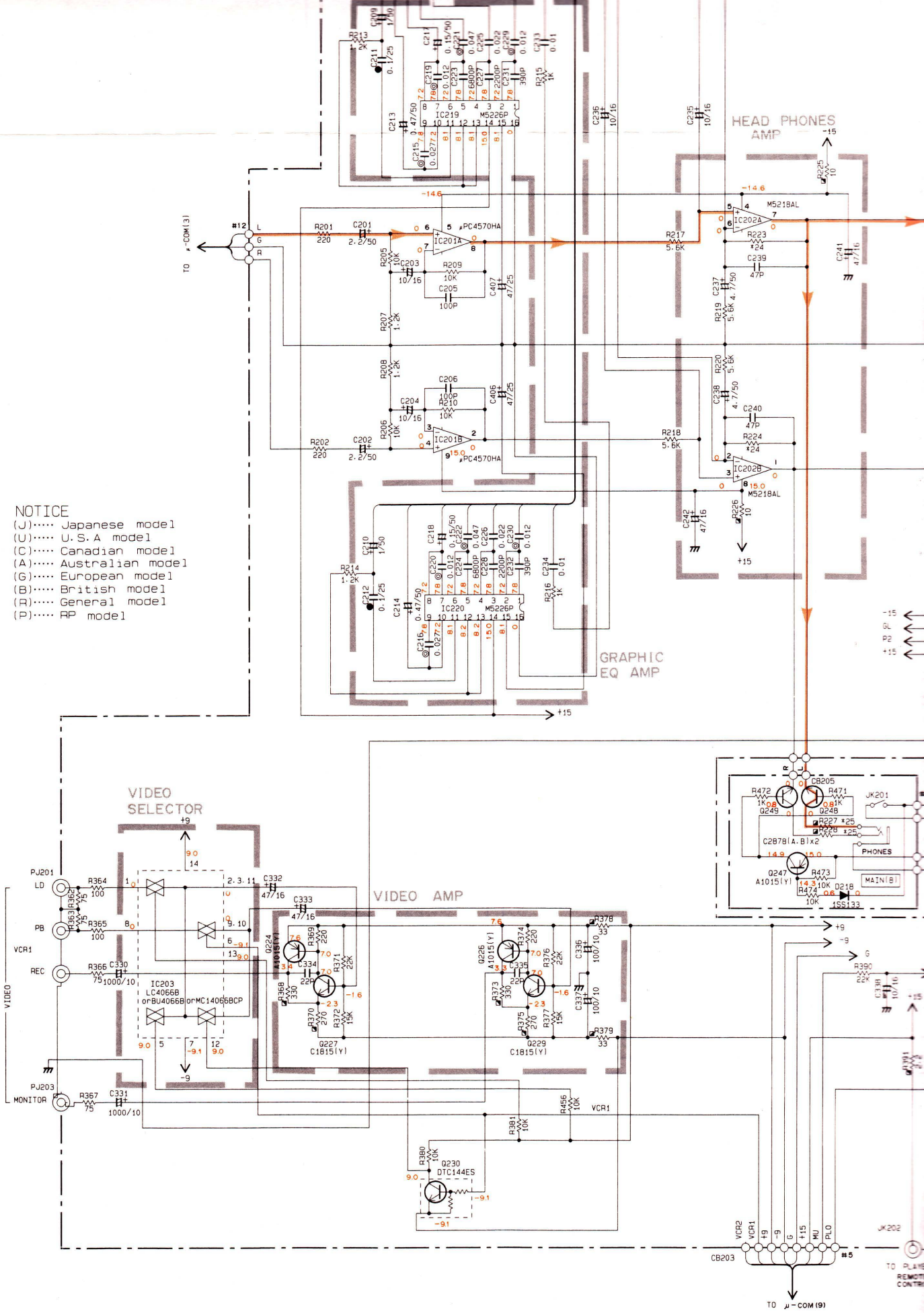

PIN CONNECTION DIAGRAM OF TRANSISTORS, DIODES AND ICS.

2SA1015(Y) 2SA970(GR, BL) 2SA1370(D, E, F) 2SC1815Y 2SC1740S(S, R) 2SC2603(E, F) 2SC3311A(Q, R, S) 2SC2240(GR, BL) 2SC2878(A, B) 2SC2925T DTC144ES 2SD1485(P, Q, R)	μPC2415HF AN78M09F 1: INPUT 2: COMMON 3: OUTPUT	AN79M15F AN79M09F 1: COMMON 2: INPUT 3: OUTPUT	2SA1358 2SC3421	2SA1491 2SC3855	4D4B41 2B4B41	1SS133 MA185 1SR139-100T32 MTZJ12C Anode Cathode

■ SCHEMATIC DIAGRAM

*		U	C	R	A	H
1	F201	7A125V	7A125V	T7A250V	T2.5A250V	
2	C412	470/25	470/25	470/63	470/25	
3	R463.470	OPEN	OPEN	12K	OPEN	
4	C413	OPEN	OPEN	47/16	OPEN	
5	Q244	OPEN	OPEN	C2240 (GR.BL)	OPEN	
6	D212	OPEN	OPEN	MTZJ12C	OPEN	
7	Q245	OPEN	OPEN	DI485 (P.Q.R)	OPEN	
8	C414	OPEN	OPEN	10/16	OPEN	
9	J381	SHORT	SHORT	OPEN	SHORT	
10						
11	R300	2P1.8K		2P12K		2P1K
14	Q213.214	2SD2029				2SC3855
15	Q215.216	2SB1347				2SA1491
16	C283.284	8200/71				6800/56
17	RY201	DH24D2-OTM				DH24-OT(M)II
18	C302.303	0.082				0.068
19	C304.305	0.27				0.15
20	C306.307	0.33				0.18
21	C328.329	0.33				0.22
22	C422.423	0.56				0.39
23	C347~356	2.7K				3.3K
24	R223.224	10K		8.2K		5.6K
25	R227.228	150		100		

CAPACITOR

REMARKS	PARTS NAME
NO MARK	ELECTROLYTIC CAPACITOR
⊗	TANTALUM CAPACITOR
NO MARK	CERAMIC CAPACITOR
◉	AXIAL READ CERAMIC CAPACITOR
◎	POLYESTEL FILM CAPACITOR
○	POLYSTYRENE FILM CAPACITOR
Ⓘ	MICA CAPACITOR
Ⓟ	POLYPROPYLENE FILM CAPACITOR
◉	SEMICONDUCTIVE CERAMIC CAPACITOR

RESISTOR

REMARKS	PARTS NAME
NO MARK	CARBON FILM RESISTOR (1/6W)
◪	CARBON FILM RESISTOR (1/4W)
△	METAL OXIDE FILM RESISTOR
◬	METAL FILM RESISTOR
⊠	METAL PLATE RESISTOR
◪	FIRE PROOF CARBON FILM RESIST
□	CEMENT MOLDED RESISTOR
⊘	SEMI VARIABLE RESISTOR
■	CHIP RESISTOR

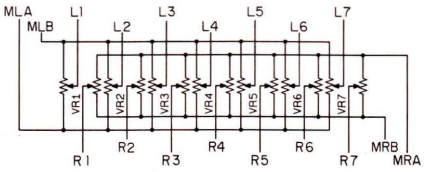

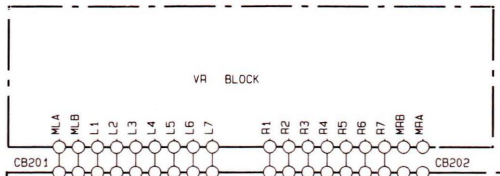

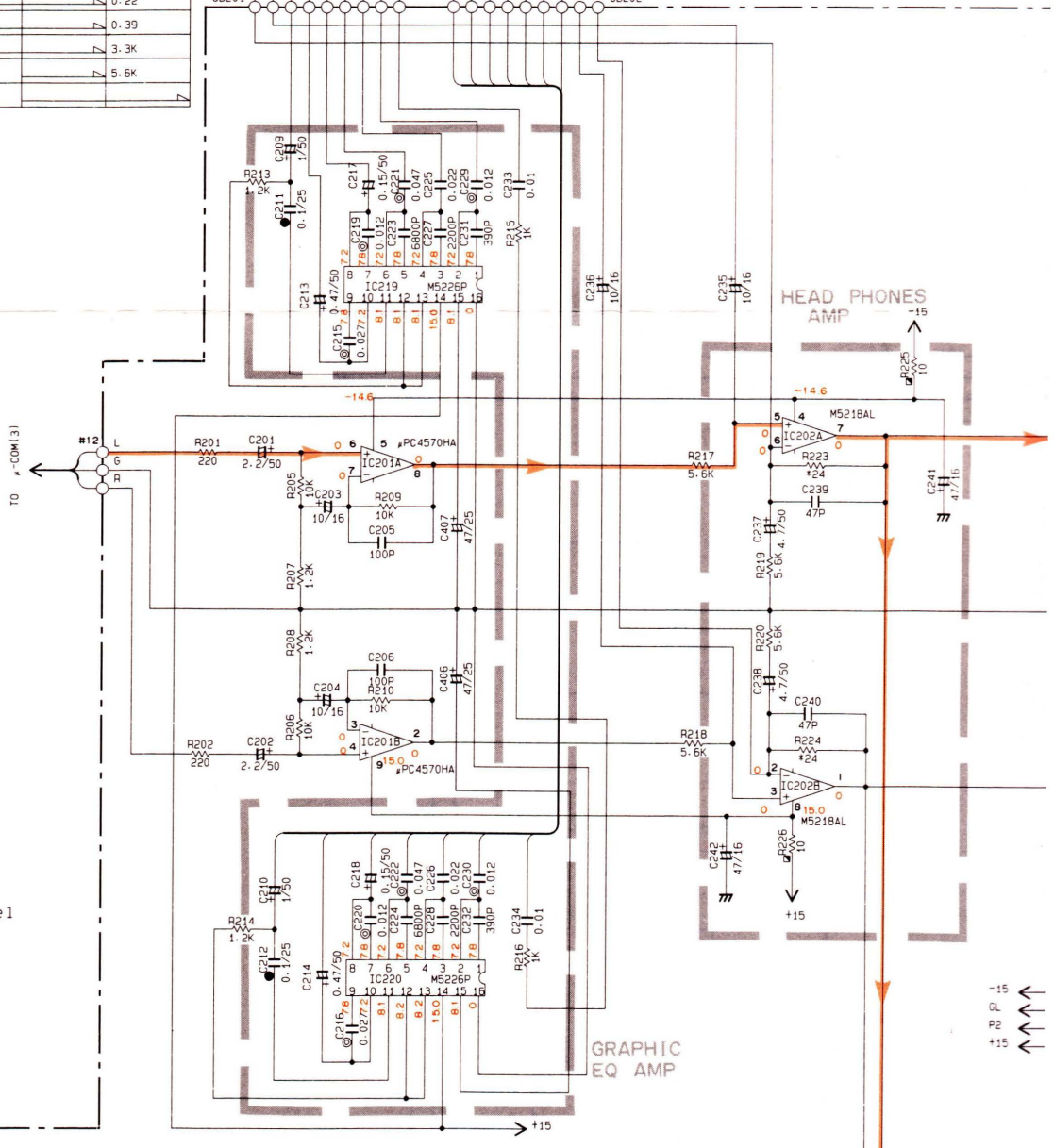

NOTICE
(J)····· Japanese model
(U)····· U.S.A model
(C)····· Canadian model
(A)····· Australian model
(G)····· European model
(B)····· British model
(R)····· General model
(P)····· RP model

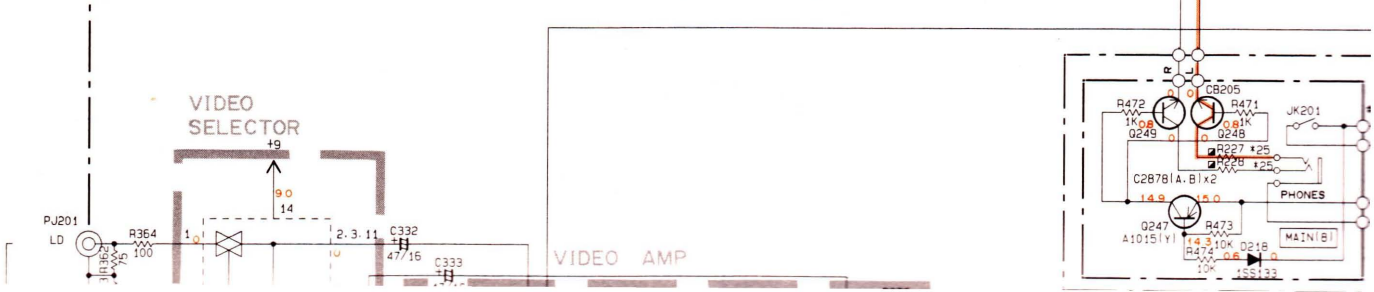

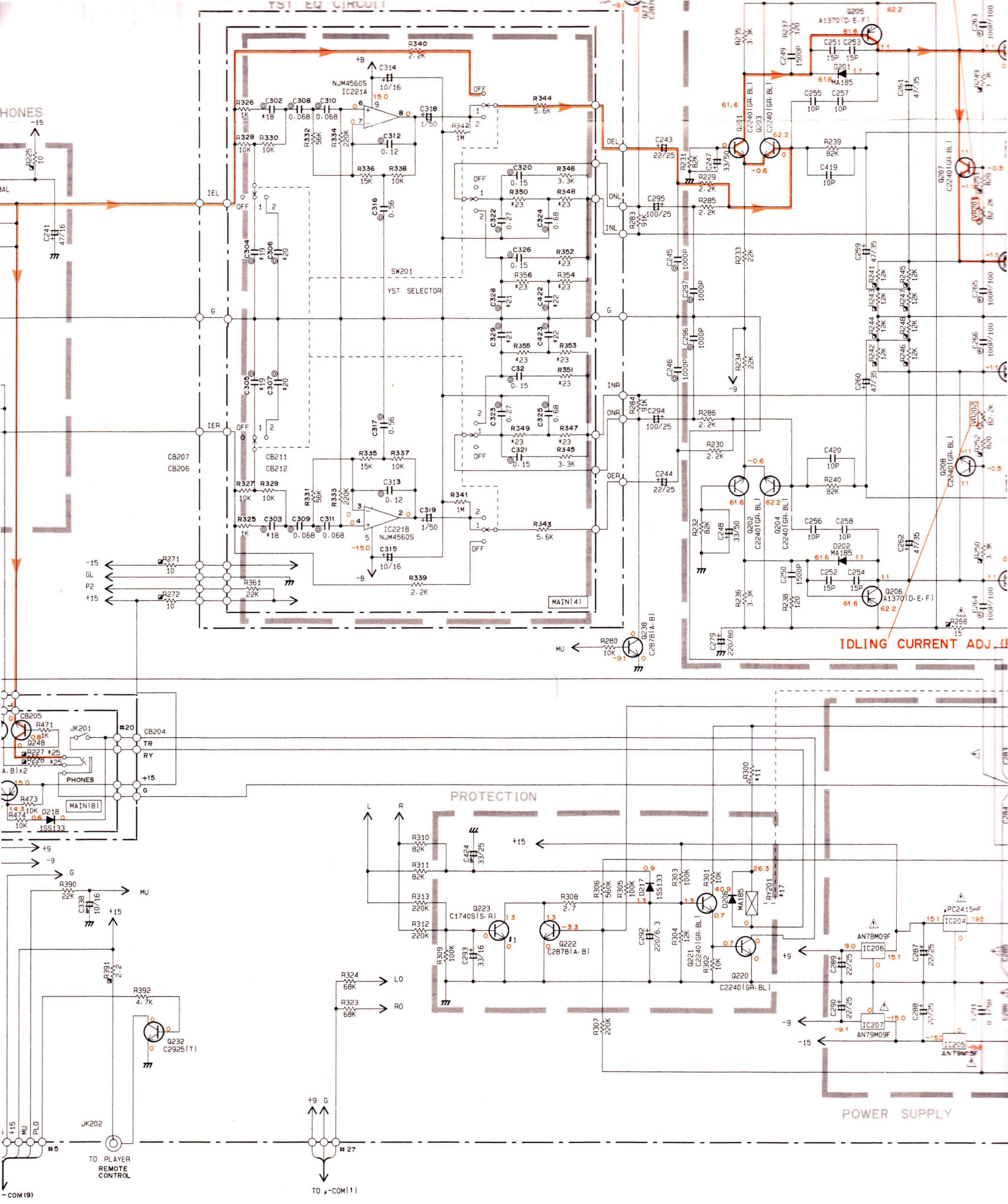

1SS133 MA185 ISR139-100T32 MTZJ12C	M5218AL	μPC4570HA NJM4560S	LC4066B BU4066B MC14066BCP	M5226P
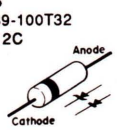	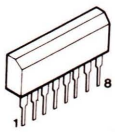	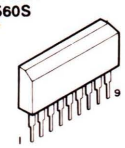	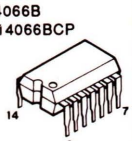	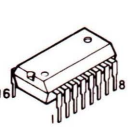

E F G H

NAME	
CAPACITOR	#
CITOR	
ITOR	
AMIC CAPACITOR	
CAPACITOR	
LM CAPACITOR	#
R	
FILM CAPACITOR	
CERAMIC CAPACITOR	

PARTS NAME	
ILM RESISTOR	(1/6W)
ILM RESISTOR	(1/4W)
IDE FILM RESISTOR	
LM RESISTOR	
ATE RESISTOR	
OF CARBON FILM RESISTOR	
OLDED RESISTOR	
IABLE RESISTOR	
ISTOR	

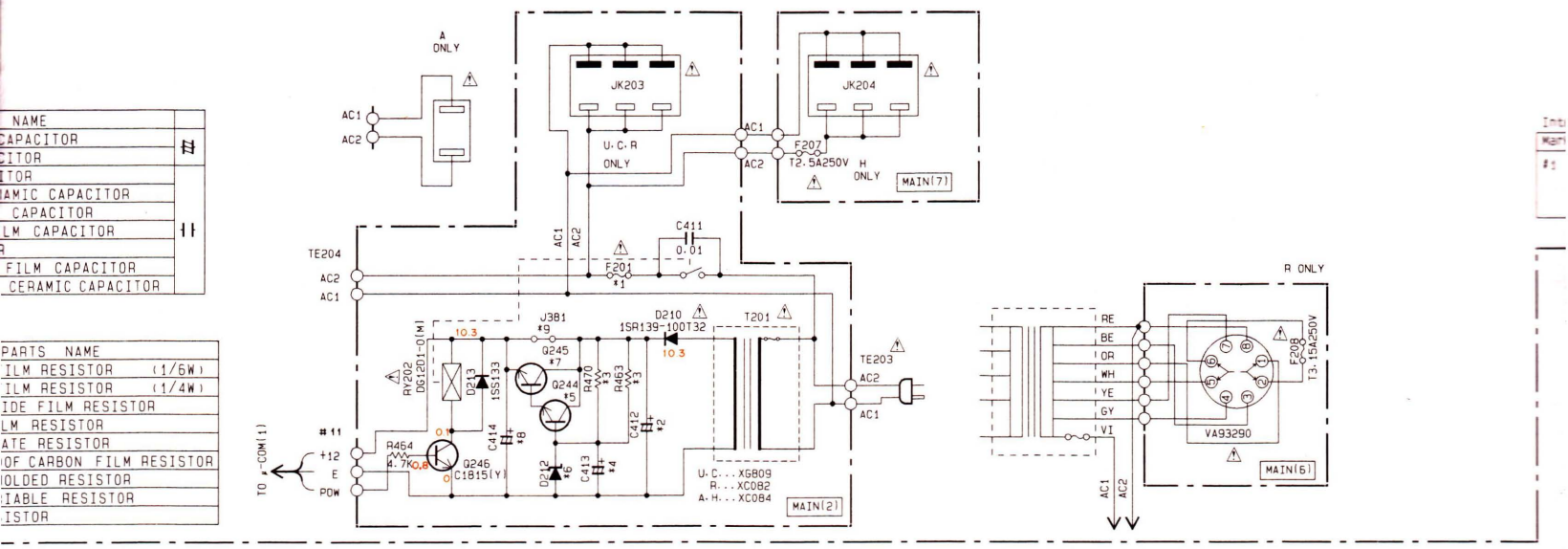

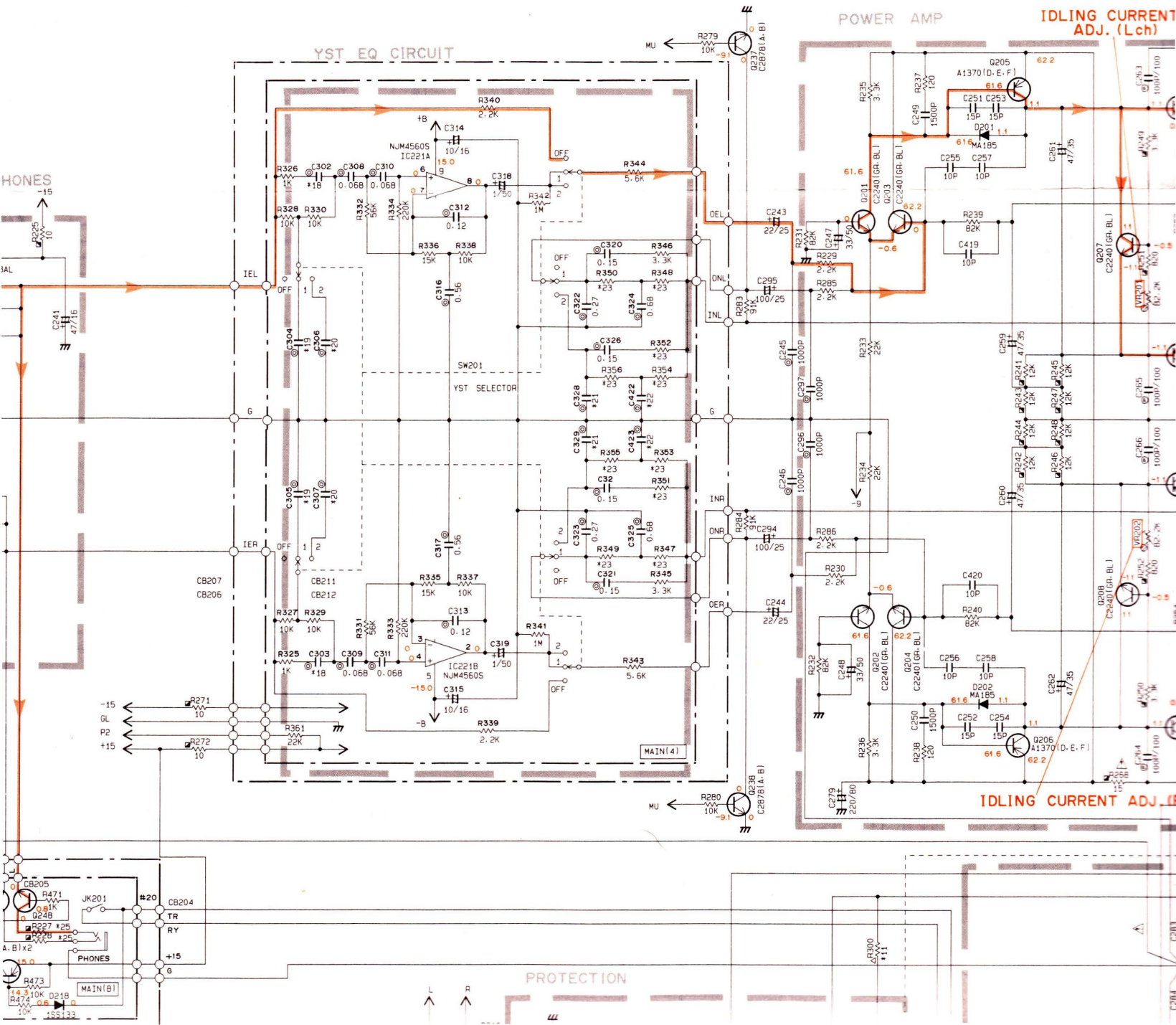

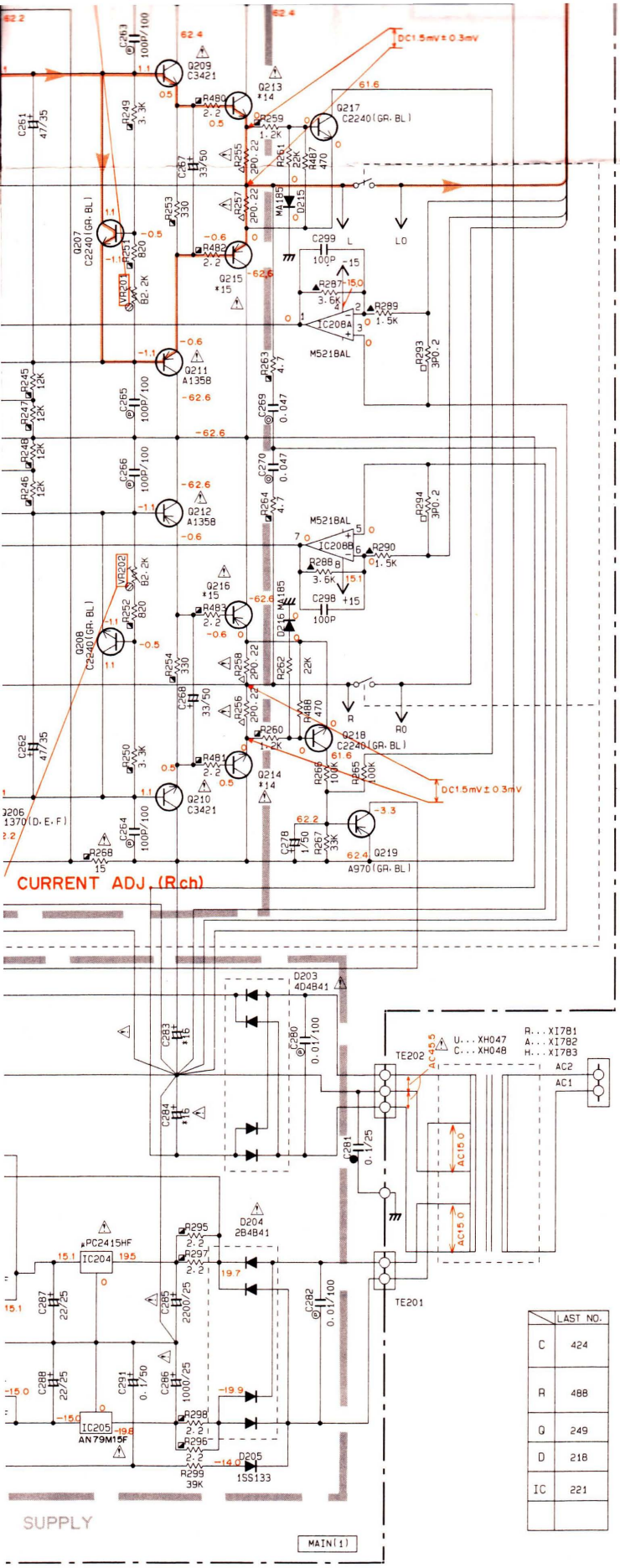

IC201 : μPC4570HA
IC221 : NJM4560S
Dual Ope-amp

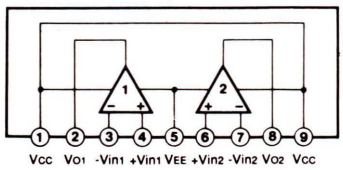

IC202, 208 : M5218AL
Dual Ope-amp

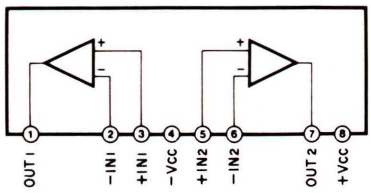

IC203 : LC4066B, MC14066BCP or BU4066B
Quad Bilateral Switch

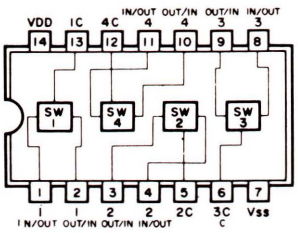

IC219, 220 : M5226P
Wqualizer Amp

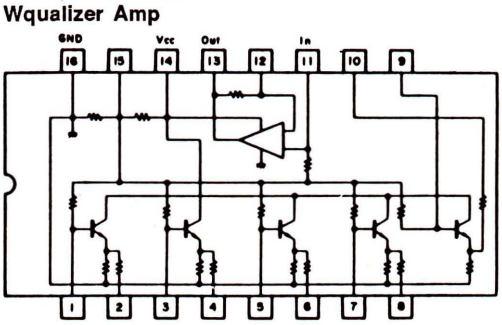

* *All voltage are measured with a 10MΩ/V DC electric volt meter.*
* *Components having special characteristics are marked ⚠ and must be replaced with parts having specifications equal to those originally installed.*
* *Schematic diagram is subject to change without notice.*

Interchangeable Parts at Manufacture-Stage

Mark	Reference Parts Number	Parts Name
#1	Q223	2SC1740S(S.R) 2SC2603(E.F) 2SC3311A(Q.R.S)

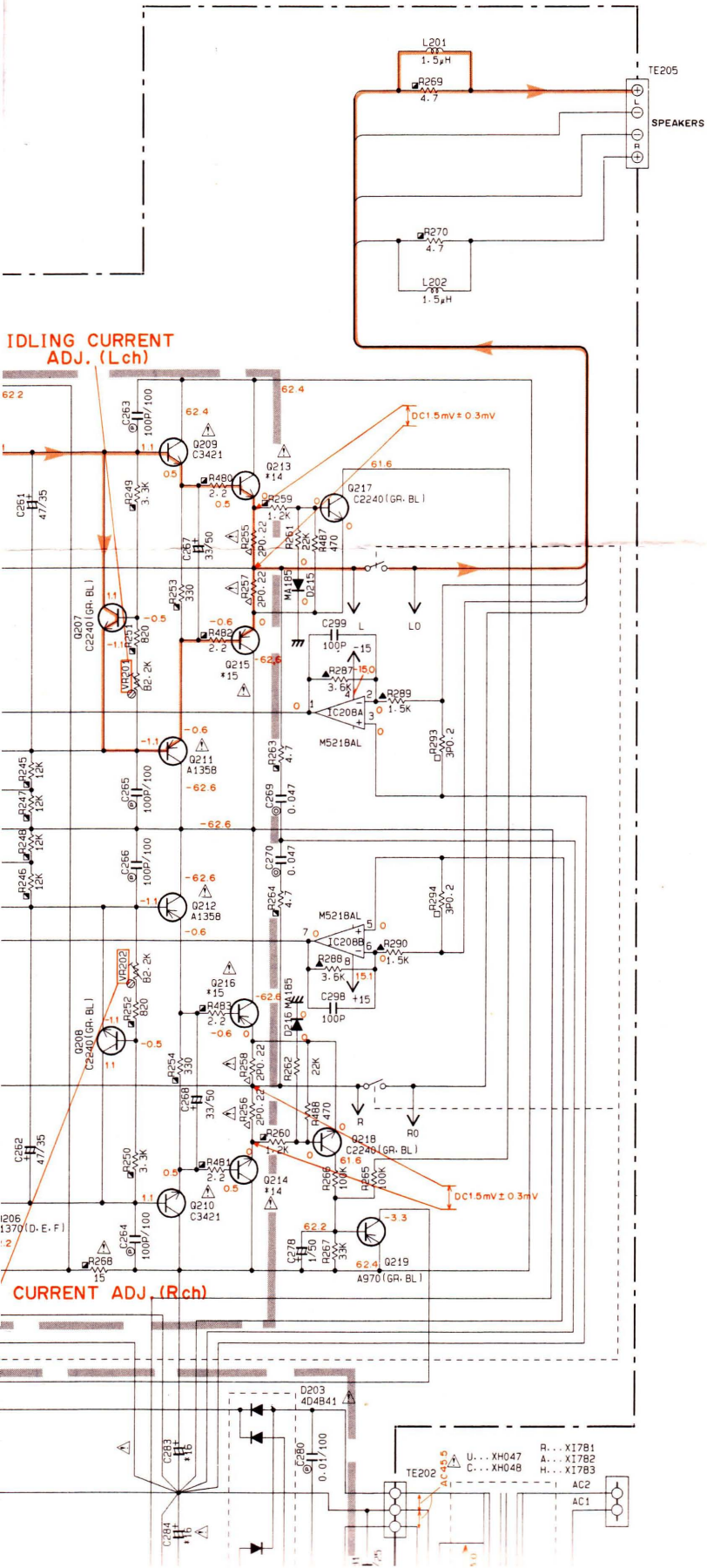

IC201 : μPC4570HA
IC221 : NJM4560S
Dual Ope-amp

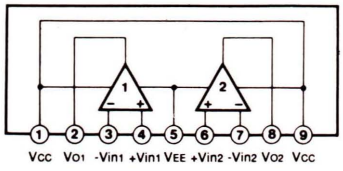

IC202, 208 : M5218AL
Dual Ope-amp

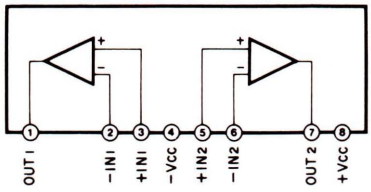

IC203 : LC4066B, MC14066BCP or BU4066B
Quad Bilateral Switch

PARTS LIST

■ **WARNING**

Components having special characteristics are marked ⚠ and must be replaced with parts having specifications equal to those originally installed.

● Carbon resistors (1/6W or 1/4W) are not included in the ELECTRICAL PARTS List. For the parts No. of the carbon resistors, refer to P. 29.

■ ELECTRICAL PARTS

Ref. NO.	PART NO.	Description			部品名	Remarks	Markets	ランク
※	VK461400	MAIN CIRCUIT BOARD			メインシート		U	
※	VK461500	MAIN CIRCUIT BOARD			メインシート		C	
※	VK461600	MAIN CIRCUIT BOARD			メインシート		R	
※	VK461700	MAIN CIRCUIT BOARD			メインシート		A	
※	VK461800	MAIN CIRCUIT BOARD			メインシート		H	
	FA153100	MYLAR FILM CAP	1000pF	50V	マイラーコン	C245,246,296,267		
	FA154120	MYLAR FILM CAP	0.012uF	50V	マイラーコン	C219,220,229,230		
	FA154270	MYLAR FILM CAP	0.027uF	50V	マイラーコン	C215,216		
	FA154470	MYLAR FILM CAP	0.047uF	50V	マイラーコン	C221,222,269,270		
	FA154680	MYLAR FILM CAP	0.068uF	50V	マイラーコン	C308-311		
	FA154820	MYLAR FILM CAP	0.082uF	50V	マイラーコン	C302,303	UCRA	
	FA154680	MYLAR FILM CAP	0.068uF	50V	マイラーコン	C302,303	H	
	FA155120	MYLAR FILM CAP	0.12uF	50V	マイラーコン	C312,313		
	FA155150	MYLAR FILM CAP	0.15uF	50V	マイラーコン	C320,321,326,327		
	FA155270	MYLAR FILM CAP	0.27uF	50V	マイラーコン	C304,305	UCRA	
	FA155150	MYLAR FILM CAP	0.15uF	50V	マイラーコン	C304,305	H	
	FA155270	MYLAR FILM CAP	0.27uF	50V	マイラーコン	C322,323		
	FA155330	MYLAR FILM CAP	0.33uF	50V	マイラーコン	C306,307	UCRA	
	FA155180	MYLAR FILM CAP	0.18uF	50V	マイラーコン	C306,307	H	
	FA155330	MYLAR FILM CAP	0.33uF	50V	マイラーコン	C328,329	UCRA	
	FA155220	MYLAR FILM CAP	0.22uF	50V	マイラーコン	C328,329	H	
	FA155560	MYLAR FILM CAP	0.56uF	50V	マイラーコン	C316,317		
	FA155680	MYLAR FILM CAP	0.68uF	50V	マイラーコン	C324,325		
	FA155560	MYLAR FILM CAP	0.56uF	50V	マイラーコン	C422,423	UCRA	
	FA155390	MYLAR FILM CAP	0.39uF	50V	マイラーコン	C422,423	H	
	UT452100	POLYPROPYLENE FILM CAP	100pF	100V	ＰＰコン	C263-266		
	UT454100	POLYPROPYLENE FILM CAP	0.01uF	100V	ＰＰコン	C280,282		
	FG211100	CERAMIC CAP	10pF	50V	セラコン	C255-258,419,420		
	FG211150	CERAMIC CAP	15pF	50V	セラコン	C251-254		
	FG211220	CERAMIC CAP	22pF	50V	セラコン	C334,335		
	FG211470	CERAMIC CAP	47pF	50V	セラコン	C239,240		
	FG212100	CERAMIC CAP	100pF	50V	セラコン	C205,206,298,299		
	FG212390	CERAMIC CAP	390pF	50V	セラコン	C231,232		
	FG213150	CERAMIC CAP	1500pF	50V	セラコン	C249,250		
	FG213220	CERAMIC CAP	2200pF	50V	セラコン	C227,228		
	FG213680	CERAMIC CAP	6800pF	50V	セラコン	C223,224		
	FG244100	CERAMIC CAP	0.01uF	50V	セラコン	C233,234		
	FG244220	CERAMIC CAP	0.022uF	50V	セラコン	C225,226		
※	UJ818220	ELECTROLYTIC CAP	220uF	6.3V	ケミコン	C292		
	UJ728100	ELECTROLYTIC CAP	100uF	10V	ケミコン	C336,337		
	UJ737100	ELECTROLYTIC CAP	10uF	16V	ケミコン	C203,204,235,236,314,315		
	UJ737100	ELECTROLYTIC CAP	10uF	16V	ケミコン	C414	R	
	UJ837330	ELECTROLYTIC CAP	33uF	16V	ケミコン	C293		
	UJ737470	ELECTROLYTIC CAP	47uF	16V	ケミコン	C241,242,332,333		
	UJ737470	ELECTROLYTIC CAP	47uF	16V	ケミコン	C413	R	
	UH129100	ELECTROLYTIC CAP	1000uF	10V	ケミコン	C330,331		
	UJ847220	ELECTROLYTIC CAP	22uF	25V	ケミコン	C243,244,287-290		
	UJ747470	ELECTROLYTIC CAP	47uF	25V	ケミコン	C406,407		
	UJ848100	ELECTROLYTIC CAP	100uF	25V	ケミコン	C294,295		

※New Parts（新規部品）　　ランク：Japan only

Ref. NO.	PART NO.	Description			部品名	Remarks	Markets	ランク
	UJ757470	ELECTROLYTIC CAP	47uF	35V	ケミコン	C259-262		
	UJ865100	ELECTROLYTIC CAP	0.1uF	50V	ケミコン	C291		
	UJ865150	ELECTROLYTIC CAP	0.15uF	50V	ケミコン	C217,218		
	UJ865470	ELECTROLYTIC CAP	0.47uF	50V	ケミコン	C213,214		
	UJ766100	ELECTROLYTIC CAP	1uF	50V	ケミコン	C209,210,278,318,319		
	UJ766220	ELECTROLYTIC CAP	2.2uF	50V	ケミコン	C201,202		
	UJ866470	ELECTROLYTIC CAP	4.7uF	50V	ケミコン	C237,238		
	UJ748470	ELECTROLYTIC CAP	470uF	25V	ケミコン	C412	UCAH	
	UH178470	ELECTROLYTIC CAP	470uF	63V	ケミコン	C412	R	
	UW888220	ELECTROLYTIC CAP	220uF	80V	ケミコン	C279		
	UJ149100	ELECTROLYTIC CAP	1000uF	25V	ケミコン	C286		⚠
	UJ149220	ELECTROLYTIC CAP	2200uF	25V	ケミコン	C285		⚠
	VI660900	ELECTROLYTIC CAP	8200uF	71V	ケミコン	C283,284	UCRA	⚠
	VK574700	ELECTROLYTIC CAP	6800uF	56V	ケミコン	C283,284	H	⚠
	UK137100	ELECTROLYTIC CAP	10uF	16V	BPケミコン	C338		
	UK347330	ELECTROLYTIC CAP	33uF	25V	BPケミコン	C424		
	VG291100	ELECTROLYTIC CAP	33uF	50V	ケミコン	C247,248,267,268		
	FI514100	CERAMIC CAP	0.01uF	VA-1	スパークキラーコン	C411	UCRA	⚠
	FI504100	CERAMIC CAP	0.01uF	VA-1	スパークキラーコン	C411	H	⚠
	VD930900	SEMI-CONDUCTIVE CERAMIC CAP	0.1uF	25V	半導体セラコン	C211,212,281		
	GD900470	COIL	1.5uH	RZ-001	空芯コイル	L201,202		
	HV453220	FLAME PROOF CARBON RESISTOR	2.2Ω	1/4W	不燃化カーボン抵抗	R295-298,391,480-483		
	HV453470	FLAME PROOF CARBON RESISTOR	4.7Ω	1/4W	不燃化カーボン抵抗	R263,264,269,270		
	HV454100	FLAME PROOF CARBON RESISTOR	10Ω	1/4W	不燃化カーボン抵抗	R225,226,271,272		
	HV454150	FLAME PROOF CARBON RESISTOR	15Ω	1/4W	不燃化カーボン抵抗	R268		⚠
	HV454330	FLAME PROOF CARBON RESISTOR	33Ω	1/4W	不燃化カーボン抵抗	R378,379		
	HV455150	FLAME PROOF CARBON RESISTOR	150Ω	1/4W	不燃化カーボン抵抗	R227,228	UC	
	HV455100	FLAME PROOF CARBON RESISTOR	100Ω	1/4W	不燃化カーボン抵抗	R227,228	RAH	
	HV455270	FLAME PROOF CARBON RESISTOR	270Ω	1/4W	不燃化カーボン抵抗	R370,375		
	HV455330	FLAME PROOF CARBON RESISTOR	330Ω	1/4W	不燃化カーボン抵抗	R253,254,368,373		
	HV455820	FLAME PROOF CARBON RESISTOR	820Ω	1/4W	不燃化カーボン抵抗	R251,252		
	HV456120	FLAME PROOF CARBON RESISTOR	1.2KΩ	1/4W	不燃化カーボン抵抗	R259,260		
	HV456330	FLAME PROOF CARBON RESISTOR	3.3KΩ	1/4W	不燃化カーボン抵抗	R249,250		
	HV457120	FLAME PROOF CARBON RESISTOR	12KΩ	1/4W	不燃化カーボン抵抗	R241-248		
	HU576150	METAL FILM RESISTOR	1.5KΩ	1/4W	金属皮膜抵抗	R289,290		
	HU576360	METAL FILM RESISTOR	3.6KΩ	1/4W	金属皮膜抵抗	R287,288		
	HL322220	METAL OXIDE RESISTOR	0.22Ω	2W	酸化金属被膜抵抗	R255-258		⚠
	HL326180	METAL OXIDE RESISTOR	1.8KΩ	2W	酸化金属被膜抵抗	R300	UC	
	HL326100	METAL OXIDE FILM RESISTOR	1KΩ	2W	酸化金属皮膜抵抗	R300	H	
	HL326120	METAL OXIDE RESISTOR	1.2KΩ	2W	酸化金属被膜抵抗	R300	RA	
	VI470300	WIRE WOUND RESISTOR	0.2Ω	3W	セメント抵抗	R293,294		
	XH503A00	IC	uPC2415HF		IC	IC204		⚠
	XB467001	IC	AN79M15F		IC	IC205		⚠
	XH471A00	IC	M5218AL		IC	IC202,208		
	XB247301	IC	uPC4570HA		IC	IC201		
	IG151400	IC	M5226P		IC	IC219,220		
	IG121800	IC	NJM4560S		IC	IC221		
	XF635A00	IC	AN78M09F		IC	IC206		⚠
	XF637A00	IC	AN79M09F		IC	IC207		⚠
	XD148A00	IC	BU4066B		IC	IC203		

※New Parts（新規部品）　　ランク：Japan only

Ref. NO.	PART NO.	Description		部品名	Remarks	Markets	ランク	
	VI283000	SLIDE SWITCH	SSSF16	スライドSW	SW201 YST-SELECTOR			
	KC002020	RELAY	DH24D2-OTM	リレー	RY201	UCRA		
	VK438300	RELAY	DH24D2-OT(M)-II	リレー	RY201	H		
	VD506000	RELAY	AC DG12D1-0(M)	リレー	RY202			⚠
	KB001520	FUSE	7A 125V	ヒューズ	F201	UC		⚠
	KB001300	FUSE	T7A 250V	ヒューズ	F201	R		⚠
	KB002980	FUSE	T2.5A 250V	ヒューズ	F201	AH		⚠
	KB000690	FUSE	T2.5A 250V	ヒューズ	F207	H		⚠
	KB003090	FUSE	T3.15A 250V	ヒューズ	F208	R		⚠
	LA002000	WRAPPING TERMINAL	2P i-TYPE P=7.5	ラッピング端子	TE201			
	LA002320	WRAPPING TERMINAL	3P i-TYPE P=7.5	ラッピング端子	TE202			
	LA002140	WRAPPING TERMINAL	2P i-TYPE P=10	ラッピング端子	TE203,204			
	VG741000	SPEAKER TERMINAL	4P	スピーカターミナル	TE205			
	VI683800	PIN JACK	1P T6312-CAAD	ピンジャック	PJ203			
	VI683900	PIN JACK	3P T6125-BAAE	ピンジャック	PJ201			
	VI661600	PHONES JACK	M1658-A0AA	ヘッドホンジャック	JK201			
	VE116900	MINI JACK	EX362GL	ミニジャック	JK202			
	VI327500	AC OUTLET		ACアウトレット	JK203	UCR		⚠
	VI283100	AC OUTLET	YKE31-0092	ACアウトレット	JK204	H		⚠
	VD005200	BASE PIN	PH 9P TE	ベースピン	CB201,202			
	VA725600	HOLDER	6P	パラレルホルダ	CB204,205,207,211			
	VA725700	HOLDER	7P	パラレルホルダ	CB206,212			
	VA725800	HOLDER,WIRE	8P	パラレルホルダ	CB203			
	VA787700	PRE-SET POTENTIOMETER	B2.2KΩ	半固定VR	VR201,202			
	IA101521	TRANSISTOR	2SA1015 Y	トランジスタ	Q224,226,247			
	IA097000	TRANSISTOR	2SA970 GR,BL	トランジスタ	Q219			
	VA854700	TRANSISTOR	2SA1370 D,E,F	トランジスタ	Q205,206			
	IC1815C0	TRANSISTOR	2SC1815 Y	トランジスタ	Q227,229,246			
	IC174070	TRANSISTOR	2SC1740S R,S	トランジスタ	Q223			
	IC224000	TRANSISTOR	2SC2240 GR,BL	トランジスタ	Q201-204,207,208,217,			
					218,220,221			
	IC224000	TRANSISTOR	2SC2240 GR,BL	トランジスタ	Q244	R		
	IC287800	TRANSISTOR	2SC2878 A,B	トランジスタ	Q222,237,238,248,249			
	VE919600	TRANSISTOR	2SC2925 T	トランジスタ	Q232			
	VB222700	TRANSISTOR	2SD1485 P,Q,R	トランジスタ	Q245	R		
	IX608510	TRANSISTOR	2SA1358	トランジスタ	Q211,212			⚠
	IX608520	TRANSISTOR	2SC3421	トランジスタ	Q209,210			⚠
	VG722000	DIGITAL TRANSISTOR	DTC144ES	デジタルトランジスタ	Q230			
	VH770800	DIODE	1SR139-100 T-32	ダイオード	D210			⚠
	IF004600	DIODE	1SS133	ダイオード	D205,213,217,218			
	VC398400	DIODE	MA185	ダイオード	D201,202,206,215,216			
	IH001160	DIODE BRIDGE	4D4B41	ダイオードスタック	D203			⚠
	IH000990	DIODE BRIDGE	2B4B41 2A 100V	ダイオードスタック	D204			⚠
	VG440300	ZENER DIODE	MTZJ12C	ツェナーダイオード	D212	R		
	XG809A00	SUB TRANSFORMER		サブトランス	T201	UC		⚠
	XC082A00	SUB TRANSFORMER		サブトランス	T201	R		⚠
	XC084A00	SUB TRANSFORMER		サブトランス	T201	AH		⚠
	LB201880	FUSE HOLDER PIN	PC-FH1	ヒューズホルダピン				
	CB644670	CAP,CAPACITOR		コンデンサーカバー		H		
	BA092970	RADIATOR		放熱器				

※New Parts（新規部品）　　ランク：Japan only

Ref. NO.	PART NO.	Description			部品名	Remarks	Markets	ランク
	BB066290	WASHER,GROUND			アースワッシャー			
	BB071360	TERMINAL,SCREW	8.3x13		ネジ端子			
	VF453200	RADIATOR			ラジエータ		C	
	ED330086	BIND HEAD SCREW	3x8	FCRM3-BL	バインド小ネジ			
	EZ001350	CUP B-TITE SCREW	3x14	FCRM3-BL	カップネジBタイト		C	
※	VK462100	μ-COM CIRCUIT BOARD			マイコンシート		UCRA	
※	VK625700	μ-COM CIRCUIT BOARD			マイコンシート		H	
	FA153270	MYLAR FILM CAP	2700pF	50V	マイラーコン	C29,31		
	FA154100	MYLAR FILM CAP	0.01uF	50V	マイラーコン	C30,32		
	FG212100	CERAMIC CAP	100pF	50V	セラコン	C36,37		
	FG212220	CERAMIC CAP	220pF	50V	セラコン	C4,5,42		
	FG212470	CERAMIC CAP	470pF	50V	セラコン	C41		
	FG244100	CERAMIC CAP.	0.01uF	50V	セラコン	C48		
	FG244470	CERAMIC CAP	0.047uF	50V	セラコン	C56		
	VG279100	CERAMIC CAP	1200pF	16V	円筒セラコン	C43,46		
	VI101300	CERAMIC CAP	0.047uF	50V	円筒セラコン	C44,45		
	UJ817470	ELECTROLYTIC CAP	47uF	6.3V	ケミコン	C3,6		
	UJ719100	ELECTROLYTIC CAP	1000uF	6.3V	ケミコン	C40		
	UJ728100	ELECTROLYTIC CAP	100uF	10V	ケミコン	C1,9		
	UJ837330	ELECTROLYTIC CAP	33uF	16V	ケミコン	C49		
	UJ838470	ELECTROLYTIC CAP	470uF	16V	ケミコン	C57		
	UJ766100	ELECTROLYTIC CAP	1uF	50V	ケミコン	C50		
	UJ866470	ELECTROLYTIC CAP	4.7uF	50V	ケミコン	C28,33-35,38,39		
	UM397220	ELECTROLYTIC CAP	22uF	16V	ケミコン	C52		
※	UM416470	ELECTROLYTIC CAP	4.7uF	50V	ケミコン	C51		
	FM116100	ELECTROLYTIC CAP	1uF	50V	BPケミコン	C47		
	VD930900	SEMI-CONDUCTIVE CERAMIC CAP	0.1uF	25V	半導体セラコン	C53,54		
	HV454330	FLAME PROOF CARBON RESISTOR	33Ω	1/4W	不燃化カーボン抵抗	R39,46		
	VI660300	RESISTOR ARRAY	100KΩx4		抵抗アレイ	R58		
	VI660200	RESISTOR ARRAY	100KΩx6		抵抗アレイ	R69		
	XG938A00	IC	BA15218N		IC	IC1		
	IG076800	IC	NJM4558S		IC	IC2		
	XD148A00	IC	BU4066B		IC	IC3-6		
	XA549001	IC	LB1294		IC	IC11		
	XA552001	IC	BA6144		IC	IC9		
	IG152500	IC	BA6229		IC	IC8		
	XH076A00	IC	LC6505C-4277		IC	IC10		
	VE989900	LIGHT DETECTING MODULE	GP1U521Y		リモコン受光ユニット	U1		
	KA906380	PUSH SWITCH			プッシュSW	SW2-7 INP.SELECTOR		
	KA804550	PUSH SWITCH			プッシュスイッチ	SW8 POWER		
	LB202270	PIN JACK	2P		ピンジャック	PJ3		
	LB401040	PIN JACK	4P	T5858-A	ピンジャック	PJ7		
	LB401050	PIN JACK	4P		ピンジャック	PJ1		

※New Parts（新規部品）　　ランク：Japan only

Ref. NO.	PART NO.	Description		部品名	Remarks	Markets	ランク
	LB606090	PIN JACK	T5916-A	ピンジャック	PJ2		
	VA826700	SOCKET	6P	ジャンパーソケット	CB11		
	VA826900	SOCKET	8P	ジャンパーソケット	CB2,14		
	VD004600	BASE PIN	PH 3P TE	ベースピン	CB3,5,8,19,21,22		
	VI583600	CERAMIC RESONATOR	400K	セラミック振動子	XL1		
	VI136900	POTENTIOMETER	B50KΩx2	二連ロータリーVR	VR1 LOUDNESS		
	VI137000	POTENTIOMETER	BH50KΩ	二連ロータリーVR	VR2 BALANCE		
	VI660400	POTENTIOMETER WITH MOTOR	Y100KΩx2	モーター付VR	VR3 VOLUME		
	VA725400	HOLDER	4P	パラレルホルダ	CB15,16		
	VA725600	HOLDER	6P	パラレルホルダ	CB17		
	VA725800	HOLDER,WIRE	8P	パラレルホルダ	CB18		
	IA101521	TRANSISTOR	2SA1015 Y	トランジスタ	Q10		
	IC206000	TRANSISTOR	2SC2060 P,Q,R	トランジスタ	Q9		
	IC287800	TRANSISTOR	2SC2878 A,B	トランジスタ	Q2,3		
	IC174070	TRANSISTOR	2SC1740S R,S	トランジスタ	Q11,12	H	
	VD678500	DIGITAL TRANSISTOR	DTA114ES	デジタルトランジスタ	Q7		
	VD678700	DIGITAL TRANSISTOR	DTC114ES	デジタルトランジスタ	Q4,5		
	IF004600	DIODE	1SS133	ダイオード	D1,2,7,18,19,23,24		
	VG437600	ZENER DIODE	MTZJ5.6A	ツェナーダイオード	D6		
	VG437700	ZENER DIODE	MTZJ5.6B	ツェナーダイオード	D3		
	VF402500	LED	SLR-34DC3H3 (ORA)	LED	D8,10,16,17		
	VH293600	LED	SLR-55DC3H (ORA)	LED	D20		
	VI013600	LED	SLR-34VC3H3 (RED)	LED	D5,9,11-15		
	VI013600	LED	SLR-34VC3H3 (RED)	LED	D22	H	
	BB071360	TERMINAL,SCREW	8.3x13	ネジ端子			
	CB091290	P.C.B SUPPORT	NO.1645	基板サポート			

※New Parts（新規部品）　　ランク：Japan only

■ EXPLODED VIEW

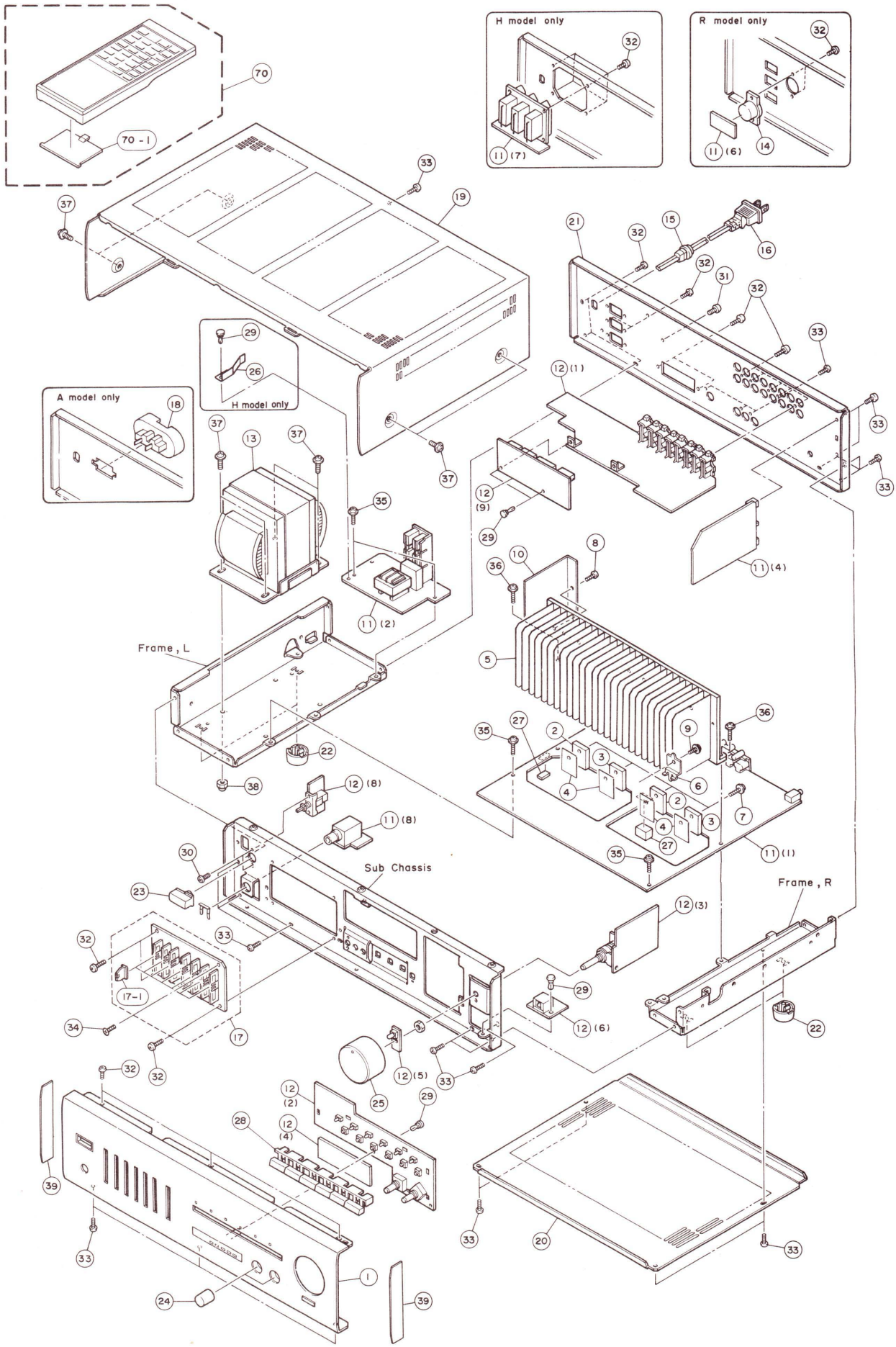

■ MECHANISM PARTS Note) Ø : Diameter

	Ref. NO.	PART NO.	Description		部品名	Remarks	Markets	ランク	
☆	1	VK461200	PANEL UNIT		パネルユニット	BL	UCRA		
☆	1	VK461300	PANEL UNIT		パネルユニット	T	UCRA		
☆	1	VK967800	PANEL UNIT		パネルユニット	BL	H		
☆	1	VK967900	PANEL UNIT		パネルユニット	T	H		
	2	IX611021	TRANSISTOR	2SB1347	トランジスタ	Q215,216	UCRA		⚠
	2	IX609730	TRANSISTOR	2SA1491	トランジスタ	Q215,216	H		⚠
	3	IX611031	TRANSISTOR	2SD2029	トランジスタ	Q213,214	UCRA		⚠
	3	IX609740	TRANSISTOR	2SC3855	トランジスタ	Q213,214	H		⚠
	4	VK195900	SHEET	19x24	シート				
☆	5	VK636300	RADIATOR		ラジエータ				
	6	VF545900	SUPPORT		サポート				
	7	VK173200	SCREW,TRANSISTOR		スクリューＴＲ				
	8	EX601250	BIND HEAD TAP TYTE SCREW	3x8	バインドＢタイトネジ				
	9	EK330030	BW HEAD TAPPING SCREW	3x10-8 FCRM3-BL	ＢＷヘッドタッピングネジ				
	10	VI632700	SHIELD PLATE		シールドプレート				
☆	11	VK461400	MAIN CIRCUIT BOARD		メインシート		U		
☆	11	VK461500	MAIN CIRCUIT BOARD		メインシート		C		
☆	11	VK461600	MAIN CIRCUIT BOARD		メインシート		R		
☆	11	VK461700	MAIN CIRCUIT BOARD		メインシート		A		
☆	11	VK461800	MAIN CIRCUIT BOARD		メインシート		H		
☆	12	VK462100	μ-COM CIRCUIT BOARD		マイコンシート		UCRA		
☆	12	VK625700	μ-COM CIRCUIT BOARD		マイコンシート		H		
	13	XH047A00	POWER TRANSFORMER		電源トランス		U		⚠
	13	XH048A00	POWER TRANSFORMER		電源トランス		C		⚠
☆	13	XI781A00	POWER TRANSFORMER		電源トランス		R		⚠
☆	13	XI782A00	POWER TRANSFORMER		電源トランス		A		⚠
☆	13	XI783A00	POWER TRANSFORMER		電源トランス		H		⚠
	14	VA932900	VOLTAGE SELECTOR	ESE-37226	電圧切替器		R		⚠
	15	CB620200	CORD STOPPER	CM-22C	コードストッパー		UC		
	15	CB620190	CORD STOPPER	CM-22B	コードストッパー		RAH		
	16	MG002220	POWER CORD	10A	電源コード		UC		⚠
	16	VE371000	POWER CORD	6A 2.0m	電源コード		R		⚠
	16	MG002310	POWER CORD	7.5A	電源コード		A		⚠
	16	MG002320	POWER CORD	2.5A	電源コード		H		⚠
	17	VE299000	SLIDE POTENTIOMETER BLOCK	B250KΩx7	スライドＶＲブロック	BL			
☆	17	VK436800	SLIDE POTENTIOMETER BLOCK	B250KΩx7	スライドＶＲブロック	T			
	17-1	CX603580	NOB		ノブ	BL			
	17-1	CX617430	KNOB		ノブ	T			
	17-2	CX603590	MAKER		マーカー				
	18	VC626100	AC OUTLET	S2-739T	電源コネクタ		A		⚠
	19	VI207500	TOP COVER		トップカバー	T			
	19	VI207600	TOP COVER		トップカバー	BL			
	20	VI209900	BOTTOM COVER		ボトムカバー				
☆	21	VK428900	REAR PANEL		リヤパネル		U		
☆	21	VK429000	REAR PANEL		リヤパネル		C		
☆	21	VK429100	REAR PANEL		リヤパネル		R		
☆	21	VK429200	REAR PANEL		リヤパネル		A		
☆	21	VK429700	REAR PANEL		リヤパネル		H		
	22	CB610390	LEG		トランレッグ				
	23	VH842000	BUTTON		ボタン	T POWER			

☆New Parts（新規部品） ランク：Japan only

Ref. NO.	PART NO.	Description			部品名	Remarks	Markets	ﾗﾝｸ
23	VH841900	BUTTON			ボタン	BL POWER		
24	VI211200	KNOB			ノブ	T BALANCE,LOUDNESS		
24	VI211300	KNOB			ノブ	BL BALANCE,LOUDNESS		
25	VI051300	KNOB	LED		ノブ	T VOLUME		
25	VI051200	KNOB	LED		ノブ	BL VOLUME		
26	VF992300	STOPPER			ストッパ		H	
27	VF201500	DAMPER			ダンパー			
28	VI210800	BUTTON	6P		ボタン	T INP.SELECTOR		
28	VI210900	BUTTON	6P		ボタン	BL INP.SELECTOR		
29	CB068880	PLASTIC RIVET	#1027		プラリベット			
30	ED330066	BIND HEAD SCREW	3x6	FCRM3-BL	バインド小ネジ			
31	EX601890	BIND HEAD BONDING SCREW	3x6	FCRM3-BL	ボンディング小ネジ			
32	EI330086	BIND HEAD TAPPING SCREW	3x8	FCRM3-BL	バインドタッピングネジ			
33	EN340020	BIND HEAD BONDING TAP. SCREW	3x8	FCRM3-BL	ボンディングBタイトネジ			
34	EO330086	FLAT HEAD TAPPING SCREW	3x8	FCRM3-BL	皿タッピングネジ			
35	EK336010	BW HEAD TAPPING SCREW	3x8	FCM3	BWタッピングネジ			
36	EK330030	BW HEAD TAPPING SCREW	3x10-8	FCM3-BL	BWヘッドタッピングネジ			
37	EK365040	BW HEAD S-TITE SCREW	4x8-10	FNM3-BL	BWヘッドSタイトネジ	T		
37	EK365090	BW HEAD S-TITE SCREW	4x8-10	ZMC2-BL	BWヘッドSタイトネジ	BL		
38	EX601580	HEXAGONAL BLIND NUT	M4	FCRM3-BL	六角袋ナット			
39	VJ078800	PLATE SIDE			プレート／サイド	BL		
39	VJ078900	PLATE SIDE			プレート／サイド	T		
	CB069250	BINDING TIE	BK-1		束線止め			
※70	VK843700	REMOTE CONTROL TRANSMITTER			リモコントランスミッター			
70-1	CX607200	LID			電池蓋			
		DRY CELL	SUM-4,AAA,R03		マンガン電池			

※New Parts（新規部品）　　ランク：Japan only

REMOTE CONTROL TRANSMITTER

■ SCHEMATIC DIAGRAM

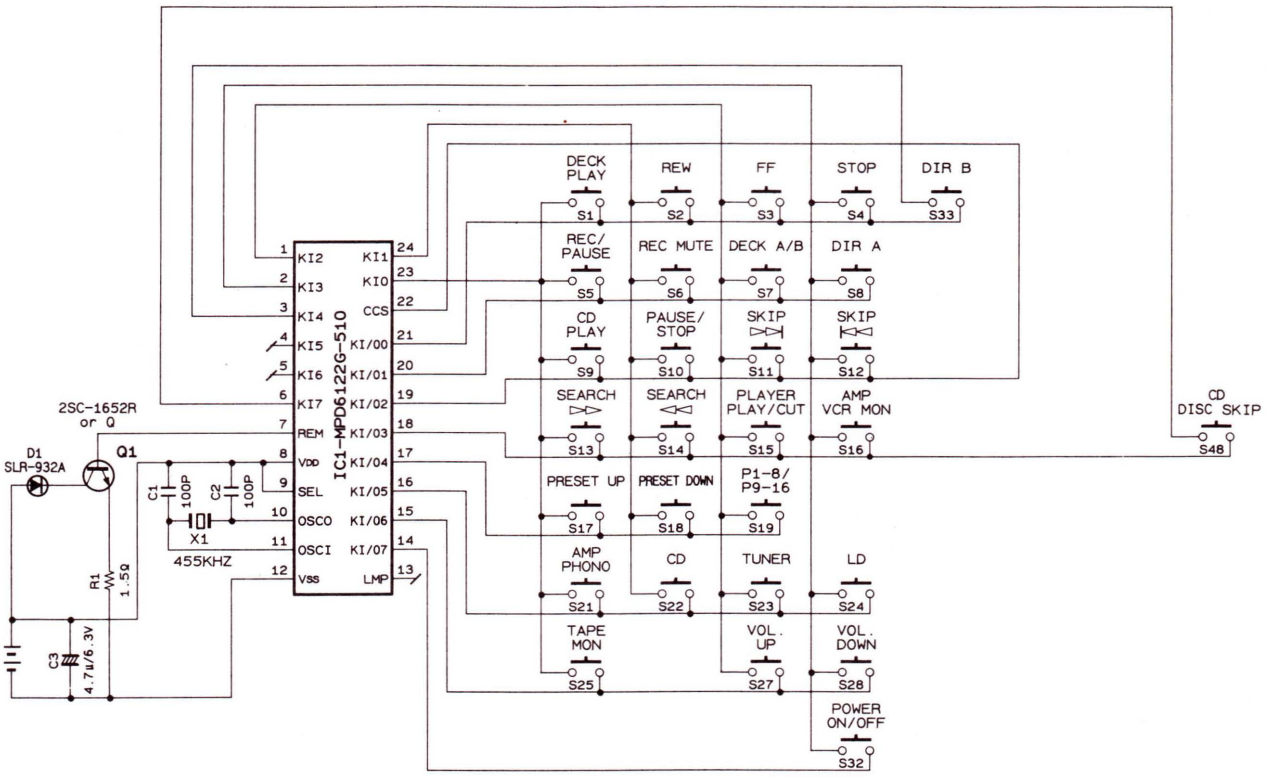

CUSTOM CODE C0 C1 C2 C3 C4 C5 C6 C7
0 1 0 1 1 1 1 0

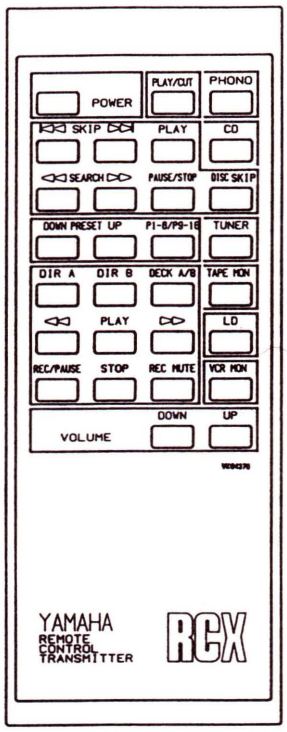

KEY No.	DATA CODE D0	D1	D2	D3	D4	D5	D6	D7	FUNCTION
1	0	0	0	0	0	0	0	0	TAPE PLAY
2	1	0	0	0	0	0	0	0	REW
3	0	1	0	0	0	0	0	0	FF
4	1	1	0	0	0	0	0	0	STOP
5	0	0	1	0	0	0	0	0	REC/PAUSE
6	1	0	1	0	0	0	0	0	REC MUTE
7	0	1	1	0	0	0	0	0	DECK A/B
8	1	1	1	0	0	0	0	0	DIR A
9	0	0	0	1	0	0	0	0	CD PLAY
10	1	0	0	1	0	0	0	0	PAUSE/STOP
11	0	1	0	1	0	0	0	0	SKIP ▶▶I
12	1	1	0	1	0	0	0	0	SKIP I◀◀
13	0	0	1	1	0	0	0	0	SEARCH ▶▶
14	1	0	1	1	0	0	0	0	SEARCH ◀◀
15	0	1	1	1	0	0	0	0	PLAYER PLAY/CUT
16	1	1	1	1	0	0	0	0	AMP VCR MON
17	0	0	0	0	1	0	0	0	TUNER PRESET UP
18	1	0	0	0	1	0	0	0	TUNER PRESET DOWN
19	0	1	0	0	1	0	0	0	TUNER P1—8/P9—16
21	0	0	1	0	1	0	0	0	AMP PHONO
22	1	0	1	0	1	0	0	0	CD
23	0	1	1	0	1	0	0	0	TUNER
24	1	1	1	0	1	0	0	0	LD
25	0	0	0	1	1	0	0	0	TAPE MON
27	0	1	0	1	1	0	0	0	VOL. UP
28	1	1	0	1	1	0	0	0	VOL. DOWN
32	1	1	1	1	1	0	0	0	POWER ON/OFF
33	0	0	0	0	0	0	1	0	TAPE DIR B
48	1	1	1	1	0	0	1	0	CD DISC SKIP

Parts List for Carbon Resistors

Value	1/4W Type Part No.	1/6W Type Part No.	Value	1/4W Type Part No.	1/6W Type Part No.
1.0 Ω	HJ35 3100	HF85 3100	12 KΩ	HJ35 7120	HF85 7120
1.8 Ω	HJ35 3180	*	15 KΩ	HJ35 7150	HF85 7150
2.2 Ω	HJ35 3220	HF85 3220	18 KΩ	HJ35 7180	HF85 7180
3.3 Ω	HJ35 3330	HF85 3330	22 KΩ	HJ35 7220	HF85 7220
4.7 Ω	HJ35 3470	HF85 3470	27 KΩ	HJ35 7270	HF85 7270
5.6 Ω	HJ35 3560	HF85 3560	33 KΩ	HJ35 7330	HF85 7330
10 Ω	HJ35 4100	HF85 4100	39 KΩ	HJ35 7390	HF85 7390
15 Ω	HJ35 4150	HF85 4150	47 KΩ	HJ35 7470	HF85 7470
22 Ω	HJ35 4220	HF85 4220	56 KΩ	HJ35 7560	HF85 7560
27 Ω	HJ35 4270	HF85 4270	68 KΩ	HJ35 7680	HF85 7680
33 Ω	HJ35 4330	HF85 4330	82 KΩ	HJ35 7820	HF85 7820
39 Ω	HJ35 4390	HF85 4390	91 KΩ	HJ35 7910	HF85 7910
47 Ω	HJ35 4470	HF85 4470	100 KΩ	HJ35 8100	HF85 8100
56 Ω	HJ35 4560	HF85 4560	120 KΩ	HJ35 8120	HF85 8120
68 Ω	HJ35 4680	HF85 4680	150 KΩ	HJ35 8150	HF85 8150
82 Ω	HJ35 4820	HF85 4820	180 KΩ	HJ35 8180	HF85 8180
100 Ω	HJ35 5100	HF85 5100	220 KΩ	HJ35 8220	HF85 8220
110 Ω	HJ35 5110	HF85 5110	270 KΩ	HJ35 8270	HF85 8270
120 Ω	HJ35 5120	HF85 5120	330 KΩ	HJ35 8330	HF85 8330
150 Ω	HJ35 5150	HF85 5150	390 KΩ	HJ35 8390	HF85 8390
160 Ω	HJ35 5160	*	470 KΩ	HJ35 8470	HF85 8470
180 Ω	HJ35 5180	HF85 5180	560 KΩ	HJ35 8560	HF85 8560
220 Ω	HJ35 5220	HF85 5220	680 KΩ	HJ35 8680	HF85 8680
270 Ω	HJ35 5270	HF85 5270	820 KΩ	HJ35 8820	HF85 8820
330 Ω	HJ35 5330	HF85 5330	1.0 MΩ	HJ35 9100	HF85 9100
390 Ω	HJ35 5390	HF85 5390	1.2 MΩ	HJ35 9120	*
470 Ω	HJ35 5470	HF85 5470	1.5 MΩ	HJ35 9150	HF85 9150
510 Ω	*	HF85 5510	1.8 MΩ	HJ35 9180	HF85 9180
560 Ω	HJ35 5560	HF85 5560	2.2 MΩ	HJ35 9220	HF85 9220
680 Ω	HJ35 5680	HF85 5680	3.3 MΩ	HJ35 9330	HF85 9330
820 Ω	HJ35 5820	HF85 5820	3.9 MΩ	HJ35 9390	*
910 Ω	HJ35 5910	HF85 5910	4.7 MΩ	HJ35 9470	HF85 9470
1.0 KΩ	HJ35 6100	HF85 6100			
1.2 KΩ	HJ35 6120	HF85 6120			
1.5 KΩ	HJ35 6150	HF85 6150			
1.8 KΩ	HJ35 6180	HF85 6180			
2.0 KΩ	HJ35 6200	HF85 6200			
2.2 KΩ	HJ35 6220	HF85 6220			
2.4 KΩ	HJ35 6240	HF85 6240			
2.7 KΩ	HJ35 6270	HF85 6270			
3.0 KΩ	HJ35 6300	HF85 6300			
3.3 KΩ	HJ35 6330	HF85 6330			
3.6 KΩ	HJ35 6360	HF85 6360			
3.9 KΩ	HJ35 6390	HF85 6390			
4.7 KΩ	HJ35 6470	HF85 6470			
5.1 KΩ	HJ35 6510	HF85 6510			
5.6 KΩ	HJ35 6560	HF85 6560			
6.8 KΩ	HJ35 6680	HF85 6680			
8.2 KΩ	HJ35 6820	HF85 6820			
9.1 KΩ	HJ35 6910	HF85 6910			
10 KΩ	HJ35 7100	HF85 7100			

1/4W Type

HJ35 ○○○○

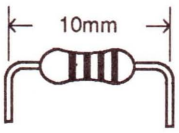

1/6W Type

HF85 ○○○○

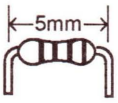

TECHNICAL BULLETIN

YAMAHA ELECTRONICS CORPORATION, USA

Number: **154H**
Effective Date: May 14,1993

MODEL: **AV-80Y**
SERIAL NUMBERS AFFECTED: **All**
FUNCTIONS AFFECTED: **YST Amplifier Operation**

TYPE OF CHANGE

MANDATORY	OPTIONAL	FOR INFO ONLY
X		

SYMPTOM: No output in YST modes only, OK in NORMAL (YST switch is on the rear panel), OR output offset in excess of 100 mV in YST modes only which causes a "pop" in the loudspeakers when the protection relay opens or closes.

CAUSE: C294 and/or C295 are getting leaky because a reverse voltage is applied across them after the unit is turned off (for about five to ten minutes).

SOLUTION: Replace C294 and C295 with a 100 ufd. 25 Volt non-polar capacitor (part # UK748100) any time the unit is brought in for service.
NOTE: Be sure to discharge the main filter capacitors (C283 & C284) before replacing C294 and C295.

6660 Orangethorpe Avenue, Buena Park, CA 90620-1345 Telephone: (714) 522-9105