CENTER

AV AMPLIFIER

DSP-A592

SERVICE MANUAL

IMPORTANT NOTICE

This manual has been provided for the use of authorized YAMAHA Retailers and their service personnel. It has been assumed that basic service procedures inherant to the industry, and more specifically YAMAHA Products, are already known and understood by the users, and have therefore not been restated.

WARNING: Failure to follow appropriate service and safety procedures when servicing this product may result in personal injury, destruction of expensive components and failure of the product to perform as specified. For these reasons, we advise all YAMAHA product owners that all service required should be performed by an authorized YAMAHA Retailer or the appointed service representative.

IMPORTANT: The presentation or sale of this manual to any individual or firm does not constitute authorization, certification or recognition of any applicable technical capabilities, or establish a principle-agent relationship of any form.

The data provided is believed to be accurate and applicable to the unit(s) indicated on the cover. The research, engineering, and service departments of YAMAHA are continually striving to improve YAMAHA products. Modifications are, therefore, inevitable and specifications are subject to change without notice or obligation to retrofit. Should any discrepancy appear to exist, please contact the distributor's Service Division.

WARNING: Static discharges can destroy expensive components. Discharge any static electricity your body may have accumulated by grounding yourself to the ground buss in the unit (heavy gauge black wires connect to this buss).

IMPORTANT: Turn the unit OFF during disassembly and parts replacement. Recheck all work before you apply power to the unit.

■ CONTENTS

TO SERVICE PERSONNEL 1
FRONT PANEL 1
REAR PANELS 2
SPECIFICATIONS 3
INTERNAL VIEW 4
DISASSEMBLY PROCEDURES 4
SELF CHECK MODE ..... 5~7
PROTECTION OPERATION CHECK FUNCTION 7
ADJUSTMENTS 8
IC DATA ..... 9~12
PIN CONNECTION DIAGRAM 13
PRINTED CIRCUIT BOARD ..... 14~23
BLOCK DIAGRAM ..... 24~25
SCHEMATIC DIAGRAM ..... 26~30
PARTS LIST ..... 31~41
REMOTE CONTROL TRANSMITTER 42

100580

YAMAHA
YAMAHA CORPORATION
P.O.Box1,Hamamatsu,Japan

1.65K-72.177 D.H Printed in Japan '97.5

DSP-A592

■ TO SERVICE PERSONNEL

Critical Components Information.
Components having special characteristics are marked and must be replaced with parts having specifications equal to those originally installed.

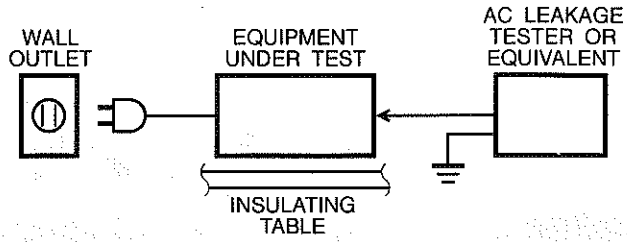

■ FRONT PANEL

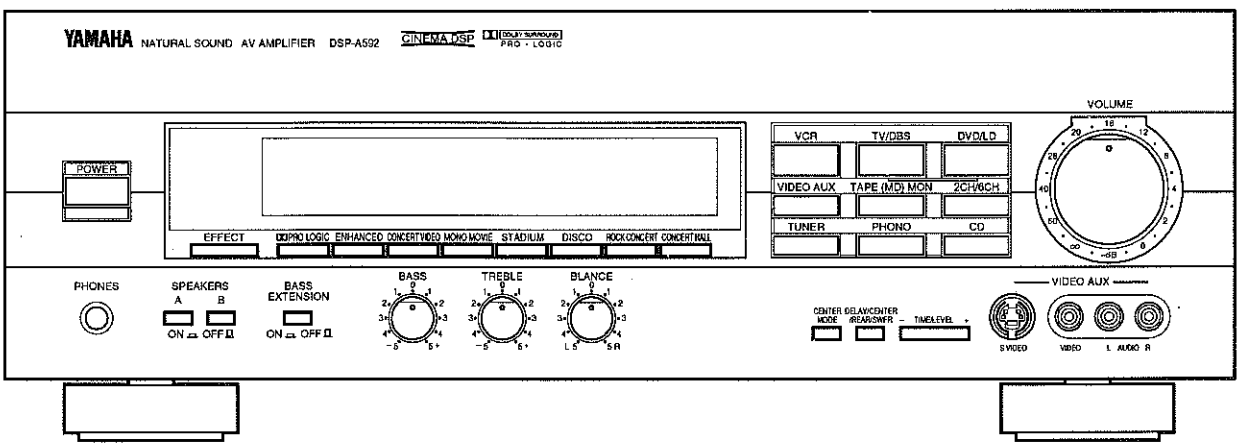

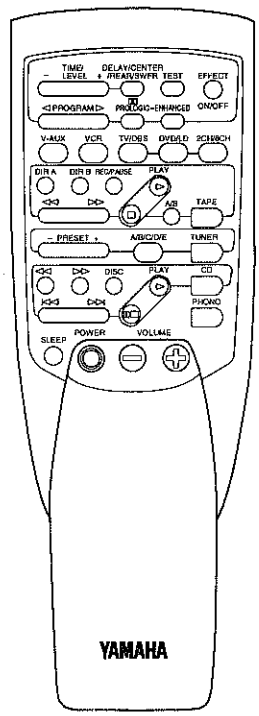

WARNING

Do not change the IMPEDANCE SELECTOR switch setting while the power to this unit is on, otherwise this unit may be damaged.

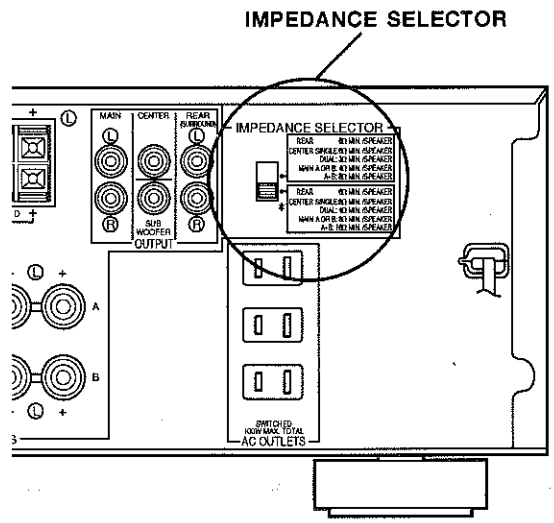

■ REAR PANELS

▼ R model

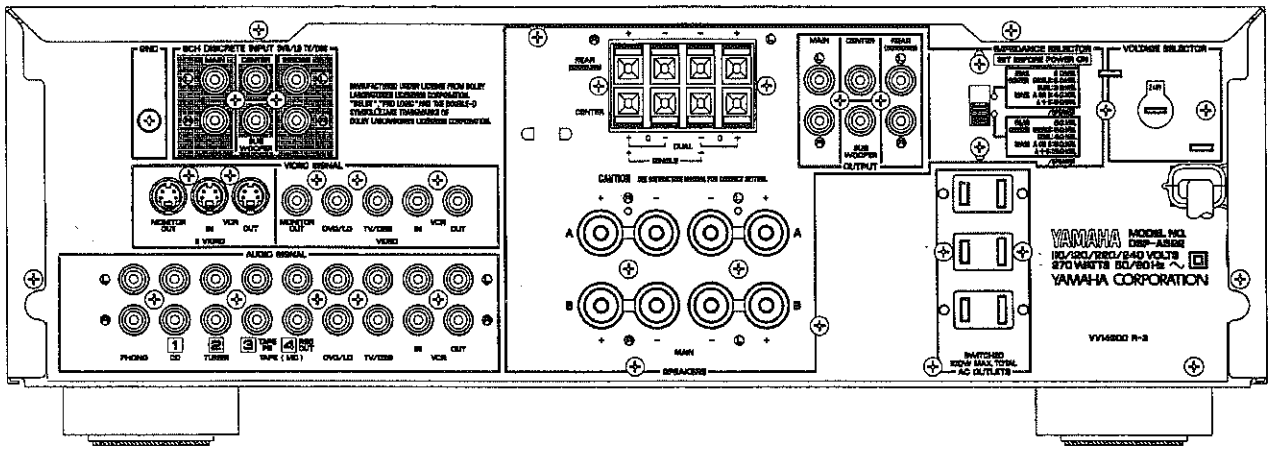

▼ B model

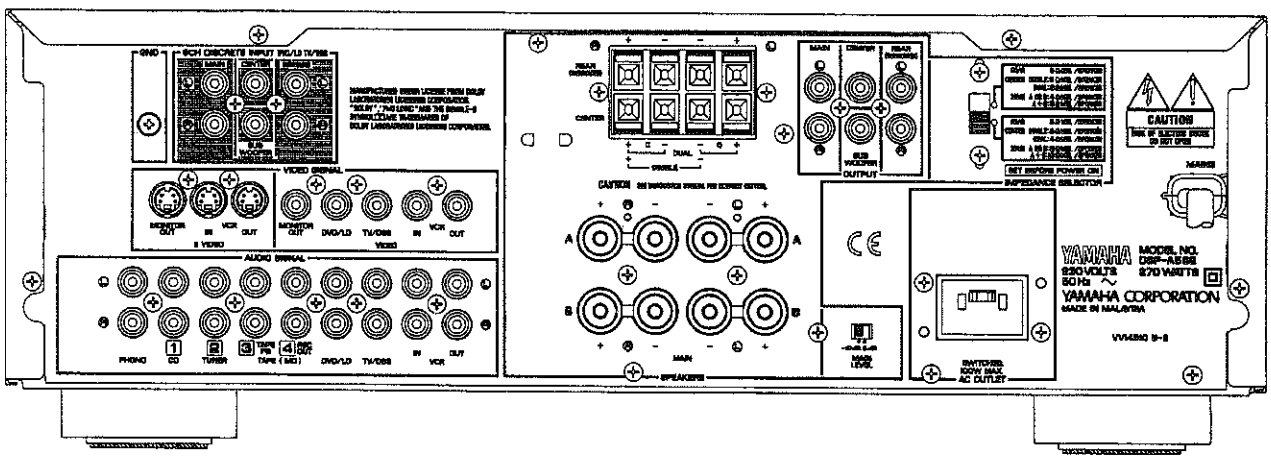

▼ G model

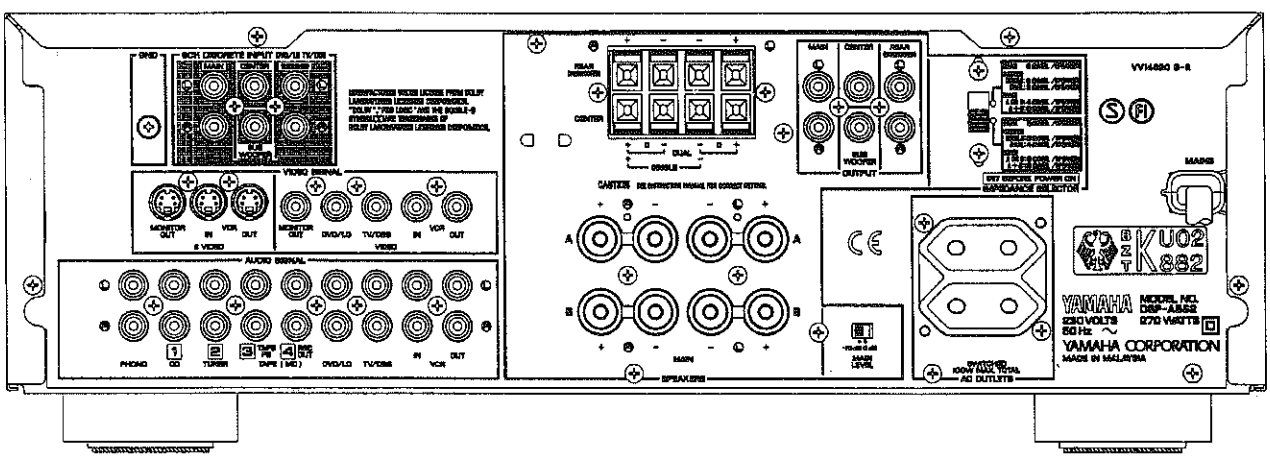

SPECIFICATIONS

Minimum RMS Output Power Per Channel	
MAIN (20Hz—20kHz, 0.04% THD, 8Ω)	70W
CENTER (1kHz, 0.07% THD, 8Ω)	70W
REAR (1kHz, 0.3% THD, 8Ω)	35W
Maximum Power (R model)	
MAIN & CENTER (1kHz, 10% THD, 8Ω)	110W
REAR (1kHz, 10% THD, 8Ω)	50W
Dynamic Power Per Channel (by IHF Dynamic Headroom Measuring Method)	
MAIN (8Ω/6Ω/4Ω/2Ω)	95W/120W/150W/170W
DIN Standard Output Power Per Channel (G model)	
MAIN (1kHz, 0.7% THD, 4Ω)	110W
IEC Power (G model)	
MAIN (1kHz, 0.1% THD, 8Ω)	85W
Power Band Width	
MAIN (0.09% THD, 30W/8Ω)	10Hz—50kHz
Damping Factor	
MAIN (20Hz—20kHz, 8Ω)	80
Input Sensitivity/Impedance	
PHONO (MM)	2.5mV/47kΩ
CD, etc	150mV/47kΩ
6 ch DISCRETE INPUT	150mV/50kΩ
Maximum Input Signal (1kHz)	
PHONO (MM), 0.04% THD	110mV
CD, etc, 0.5% THD	2. 2V
Output Level/Impedance (Effect off)	
REC OUT	150mV/2.5kΩ
PRE OUT (MAIN/CENTER)	2.2V/1.2kΩ
PRE OUT (REAR)	1.6V/1.2kΩ
SUB WOOFER	6.0V/1.5kΩ
Headphone Jack Rated Output/Impedance	
0.04% THD, 8Ω	0.5V/390Ω
Frequency Response (20Hz—20kHz)	
CD, etc.	0±0.5dB
RIAA Equalization Deviation(20Hz—20kHz)	
PHONO (MM)	0±0.5dB
Total Harmonic Distortion	
PHONO (MM) to REC OUT (20Hz—20kHz) 1V	0.02%
CD, etc. to MAIN SP out 20Hz—20kHz, 30W/8Ω (Effect off)	0.025%
Signal-to-Noise Ratio (IHF-A-Network)	
PHONO (MM), Input Shorted	
R models	85dB
B, G models	82dB
CD, etc, Input Shorted	98dB
Residual Noise (IHF-A-Network)	
MAIN L, R SP out	140μV
Channel Separation (Vol –30dB, Effect off)	
PHONO (MM), Input Shorted, 1kHz/10kHz	60dB/50dB
CD, etc, Input 5.1kΩ Shorted, 1kHz/10kHz	60dB/45dB
Tone Control Characteristics	
Bass Boost/Cut	±10dB (50Hz)
Turnover frequency	350Hz
Treble Boost/Cut	±10dB (20kHz)
Turnover frequency	3.5kHz
BASS EXTENTION	+6dB (50Hz)
Gain Tracking Error (0dB to –60dB)	3dB

Video	
Video Signal Type	
R model	NTSC/PAL
B, G models	PAL
Video Signal Level	1Vp-p/75Ω
S-Video Signal Level Y	1Vp-p/75Ω
C	0.286Vp-p/75Ω
Maximum Input Level	1.5Vp-p
S/N	50dB
Monitor Out Frequency Response	5Hz—10MHz, –3dB
Power Supply	
B, G models	AC230V 50Hz
R model	AC110/120/220/240V 60/50Hz
Power Consumption	270W
AC Outlets	
3 Switched Outlets (R model)	100W max. total
2 Switched Outlets (G model)	100W max. total
1 Switched Outlet (B model)	100W max.
Dimensions (W x H x D)	435 x 151 x 379.5mm (17-1/8" x 5-15/16" x 14-15/16")
Weight	11.0kg (24 lbs. 4 oz)

**Specifications are subject to change without notice.*

B ..... British model

G ..... European model

R ..... General model

Manufactured under license from Dolby Laboratories Licensing Corporation. "Dolby", "Pro Logic", and the double-D symbol ▯▯ are trademarks of Dolby Laboratories Licensing Corpolation.

● DIMENSIONS

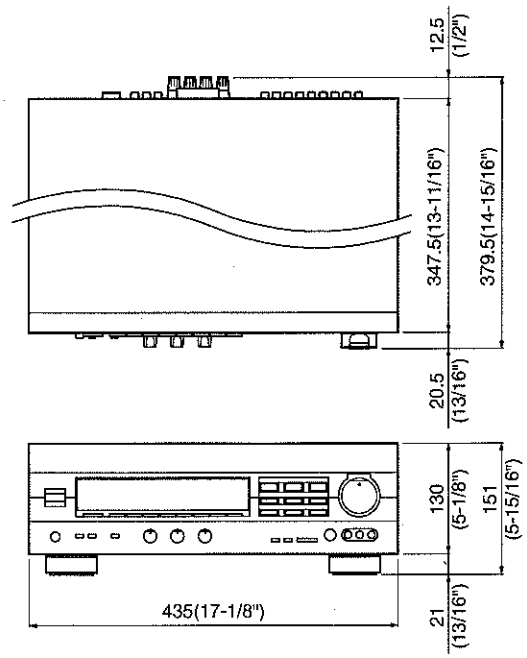

Unit : mm (inch)

■ INTERNAL VIEW

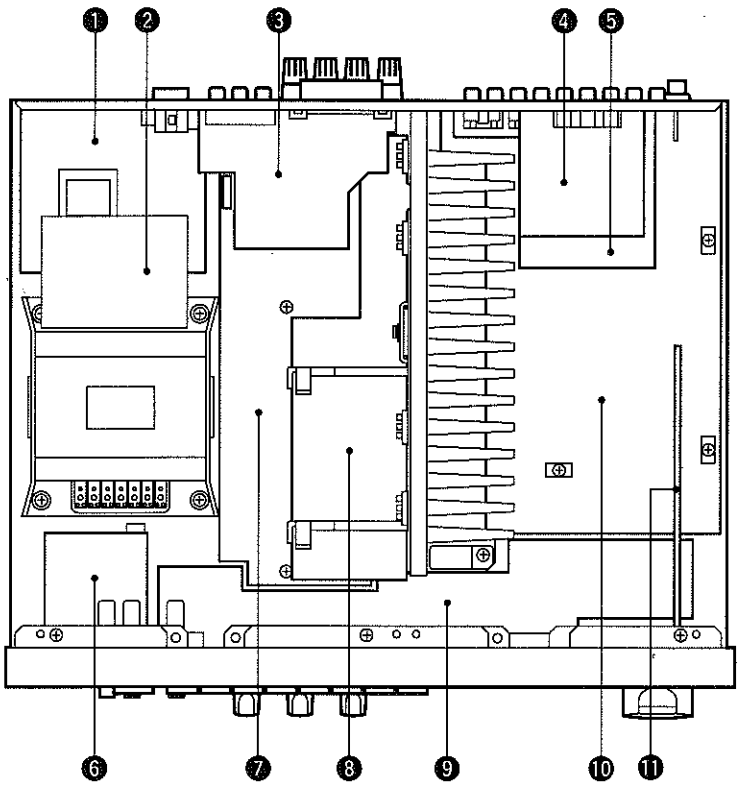

❶ P. C. B. INPUT (4)
❷ P. C. B. INPUT (3)
❸ P. C. B. AMP (3)
❹ P. C. B. OPERATION (4)
❺ P. C. B. INPUT (2)
❻ P. C. B. AMP (4)
❼ P. C. B. AMP (2)
❽ P. C. B. AMP (1)
❾ P. C. B. OPERATION (3)
❿ P. C. B. INPUT (1)
⓫ P. C. B. OPERATION (2)

■ DISASSEMBLY PROCEDURES (Remove parts in disassembly order as numbered.)

1. Removal of Top Cover

a. Remove 4 screws (①) and 4 screws (②) in Fig. 1.

2. Removal of Bottom Cover

a. Remove 6 screws (③) in Fig. 1.

3. Removal of Front Panel

a. Remove 4 knobs.

b. Remove 6 screws (④) in Fig. 1.

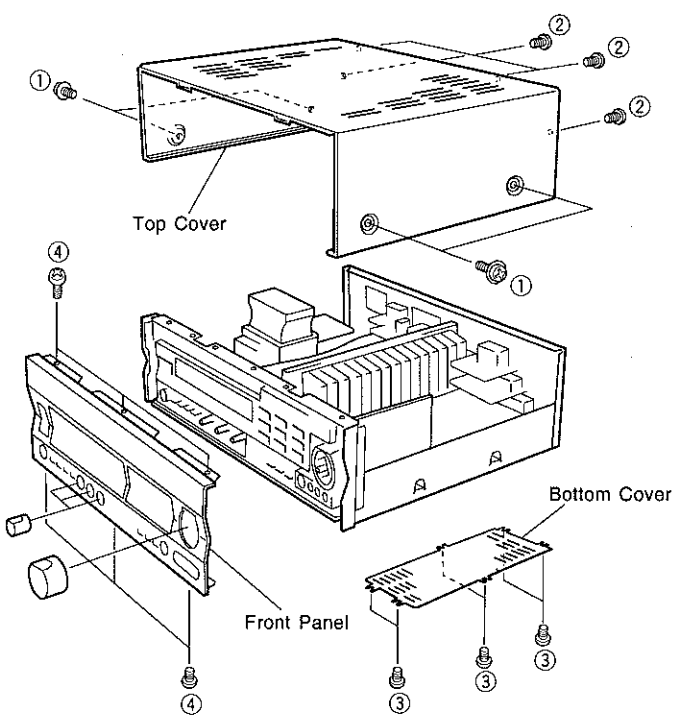

Fig. 1

■ SELF CHECK MODE (SELF)

This machine has the SELF CHECK MODE (SELF) for facilitating inspection and measurement.

HOW TO START & CANCEL

Turn the POWER switch ON while pressing the DVD/LD and CONCERT HALL keys simultaneously, and then the unit enters the SELF CHECK MODE (SELF). FL displays "SELF 1" first.
(The INPUT CD and SW levels are 0dB.)
If the sound field program key of the main unit is pressed, the mode is set to the CHECK mode of that number. It is possible to select the INPUT even during the self check (except for SELF 8).
* Switching between 2CH and 6CH is possible when SELF1 is selected.

To cancel the SELF CHECK MODE, turn the POWER switch OFF or press the CONCERT HALL key. (The unit enters the normal mode.)

CONTENTS OF SELF CHECK MODE

No.	Menu	Select Key
1	RAM THROUGH A	DD PRO LOGIC
2	RAM THROUGH B	ENHANCED
3	RAM THROUGH C	CONCERT VIDEO
4	EFFECT OFF/DISCO/FL ALL ON	MONO MOVIE
5	MANUAL TEST	STADIUM
6	DOLBY PRO LOGIC	DISCO
7	MAKER PRESET	ROCK CONCERT
8	EXIT	CONCERT HALL

HOW TO USE SELF CHECK MODE

In order to confirm characteristics (specifications) listed in the table below, use SELF NO. 1, 3 and 4. (For specifications, refer to page 3.)

No.	Items
1	• Output Level/Impedance • Frequency Response • Total Harmonic Distortion (Rec Out & MAIN) • S/N
3	• Minimum RMS Output Power Per Channel (Center & Rear) • Total Harmonic Distortion (Rear)
4	• Minimum RMS Output Power Per Channel (MAIN) • Input Sensitivity/Impedance • Headphone Jack Rated Output/Impedance • Channel Separation • Tone Control Characteristics

DETAILS OF SELF CONTENT

SELF 1 RAM THROUGH A

- MAIN L/R is output through the bypass.
- CENTER is output with the steering OFF and by (L+R)/2. (WIDE mode)
- RL/RR passes through the PS-RAM and is output through the DSP.
- The electronic volume is 0dB for CENTER and -2dB for REAR.
- FL displays "SELF 1"

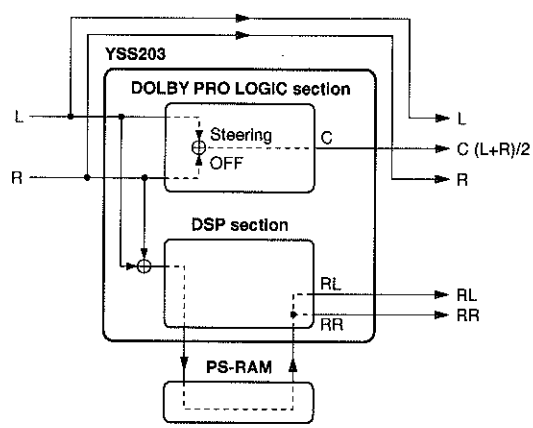

CD INPUT	: 1kHz, –20dB	
VOLUME	: MAX	
PRE OUT	: MAIN	+4.1dB±1dB
	: REAR	+1.0dB±1dB
	: CENTER	+4.9dB±1dB

SELF 2 RAM THROUGH B

- L/R and RL/RR pass through the PS-RAM and are output through the DSP.
- CENTER is output with the steering OFF and by (L+R)/2. (WIDE mode)
- The electronic volume (for CENTER/REAR) is -10dB.
- FL displays "SELF 2"

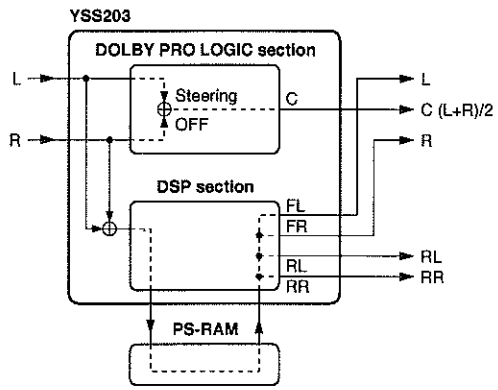

CD INPUT	: 1kHz, –20dB	
VOLUME	: MAX	
PRE OUT	: MAIN	+3.5dB±1dB
	: REAR	–6.7dB±1dB
	: CENTER	–∞dB

SELF 3 RAM THROUGH C

- L/R is output with the steering OFF.
- CENTER is output with the steering OFF and by (L+R)/2. (WIDE mode)
- RL/RR passes through the PS-RAM and is output through the DSP.
- The electronic volume is +10dB for CENTER and +9dB for REAR.
- FL displays "SELF 3"

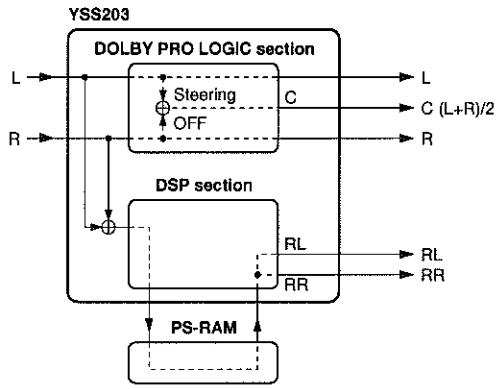

CD INPUT	: 1kHz, –35dB	
VOLUME	: MAX	
PRE OUT	: MAIN	–10.4dB±1dB
	: REAR	–2.8dB±1dB
	: CENTER	–∞dB

SELF 4 EFFECT OFF/DISCO/FL ALL ON

- Every time the MONO MOVIE key is pressed, the menu changes.

1: EFFECT OFF
2: DISCO (electronic volume is 0dB.)
3: FL displays all ON

SELF 5 MANUAL TEST

- Every time STADIUM key is pressed, the TEST TONE shifts in the order of →L→C→R→S→ and is output.
  (The CENTER mode is WIDE)
- The electronic volume (for CENTER/REAR) is 0dB.

SELF 6 DOLBY PRO LOGIC

- The auto input balance which is ON in the normal mode is turned OFF.
- CENTER MODE is changed by pressing the DISCO key or the CENTER MODE key.
- The electronic volume (for CENTER/REAR) is 0dB.
- The FL displays "SELF 6" and the center mode.

CD INPUT	: 1kHz, -35dB	
VOLUME	: MAX	
PRE OUT	: MAIN	-30.7dB±1dB
	: REAR	-∞dB
	: CENTER	-8.2dB±1dB

SELF 7 MAKER PRESET

- Every time the ROCK CONCERT key is pressed, the mode changes between the KEEP DATA and PRESET modes. Turning OFF the power in the "PRESET" mode will restore the FACTORY PRESET mode.

- **Factory Preset**

1) SURROUND section

DELAY TIME	: DD PRO LOGIC	20ms
	ENHANCED	20ms
	CONCERT VIDEO	28ms
	MONO MOVIE	20ms
	STADIUM	45ms
	DISCO	14ms
	ROCK CONCERT	17ms
	CONCERT HALL	30ms
CENTER MODE	: NORMAL	
VOLUME LEVEL	: CENTER	0dB
	REAR	0dB
	SW	0dB

2) SELECTOR section

INPUT	: CD
VIDEO (BGV)	: DVD/LD

SELF 8 EXIT

- "MODEL/DESTINATION" is displayed first. When the CONCERT HALL key is pressed again, the unit will exit the SELF CHECK mode and enters the NORMAL mode.

■ PROTECTION OPERATION CHECK FUNCTION

1. Turn the POWER switch ON while pressing the TUNER and CONCERT HALL keys simultaneously, and the protection operation mode and the microprocessor AD input value are displayed for 3 seconds.

Example : PRT-PS [AD value]
PRT-DC [AD value]
PRT-I

[PRT-PS] indicates detection of an abnormal voltage of the power supply.

[PRT-DC] indicates detection of an abnormal DC value from the amplifier.

[PRT-I] indicates detection of an abnormal overcurrent from the amplifier.

[PRT-NON] indicates no detection.

When the CONCERT HALL key is pressed during the above display, the input data are retained till they are cleared.
("PRT-NON" appears on display when the data are cleared.)

2. Turn the POWER switch ON while pressing the TUNER and the ROCK CONCERT keys simultaneously, and the input value for detection of an abnormal power supply voltage and the input value for detection of an abnormal amplifier DC will be displayed.

Example : P - [AD value] D - [AD value]

[P-] indicates detection of an abnormal power supply voltage.

[DC-] indicates detection of an abnormal amplifier DC.

Type of protection	Normal (AD value)	Abnormal (AD value)
Detection of an abnormal power supply voltage	37 - 74	0 - 36 & 75 - 255
Detection of an abnormal amplifier DC	3 - 35	0 - 2 & 36 - 255

Press any key, and the display will be canceled.

■ ADJUSTMENTS

● Confirmation of Idling Current

1) No signal applied.
2) Non-loaded condition.
3) Aging is not neccessary.

Item	Test Point	Rating (DC)	Note
MAIN L	CB529	0.1mV~3mV	If the measured voltage exceeds 3.1mV, cut the lead wires of R557(L ch), R565(R ch), R572(C ch), R731(RL ch) and R738(RR ch) and then check again if each measured value satisfies the rating.
MAIN R	CB530		
CENTER	CB531		
REAR L	R745		
REAR R	R748		

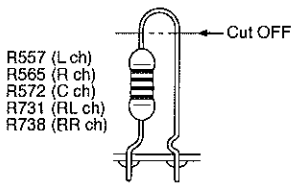

Note)

- If R557(L ch), R565(R ch), R572(C ch), R731(RL ch) or R738(RR ch) have already been cut off and idling current does not flow, reconnect R557(820Ω), R565(820Ω), R572(820Ω), R731(1kΩ) or R738(1kΩ).
- Q514, Q516, Q518, Q708 and Q713 are transistors for temperature correction. Apply silicone grease to the contact surface with the heat sink.

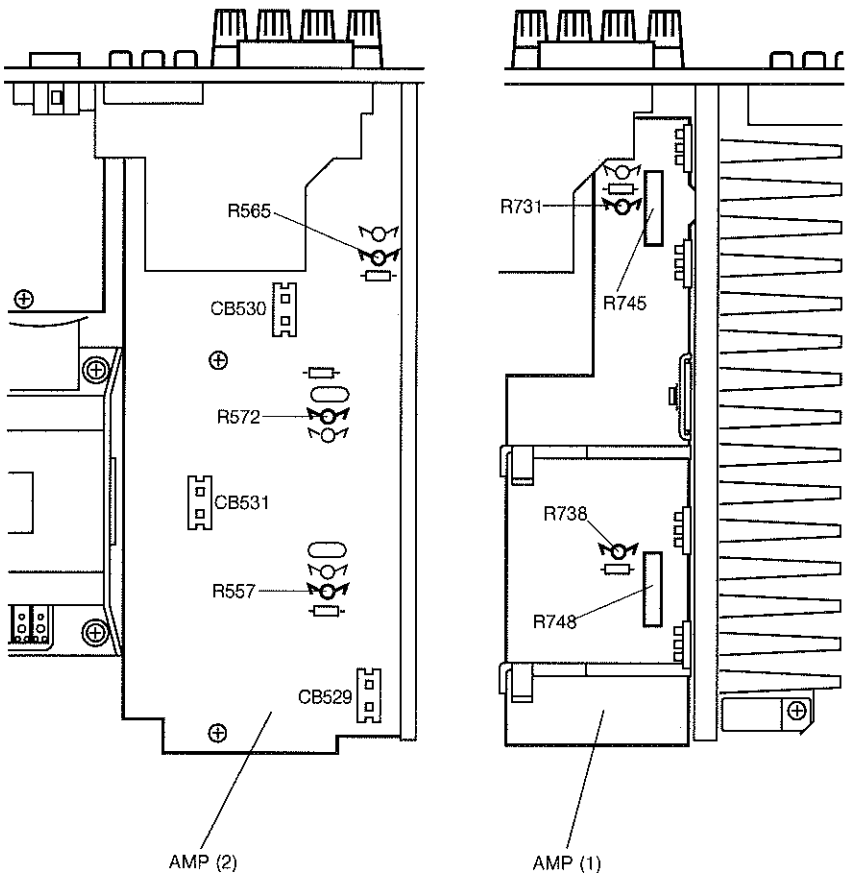

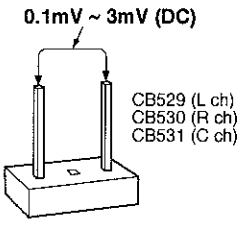

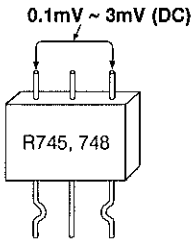

IC DATA

IC601 : M38172M4-192FP
8 bit μ-COM

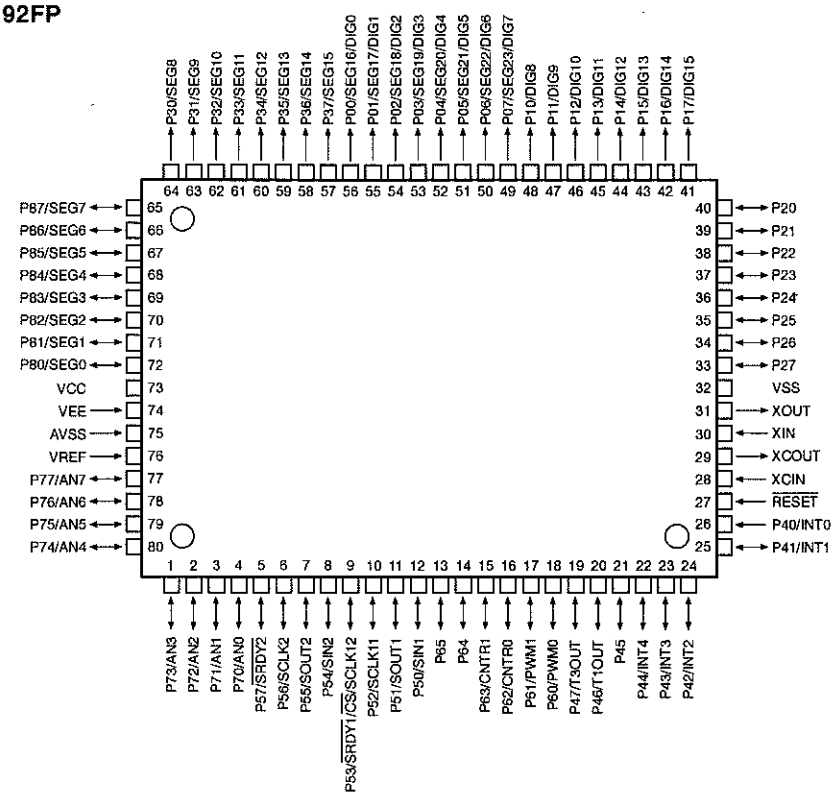

Pin No.	Port	I/O	Function	
1	P73	I	KEY AD IN 1	(A-D)
2	P72	I	METER IN (Not used)	(A-D)
3	P71	I	PROTECTION 1 DETECT (PS)	(A-D)
4	P70	I	PROTECTION 2 DETECT (DC)	(A-D)
5	P57	I	PROTECTION 3 DETECT (I)	
6	P56	O	SCLK 2	
7	P55	O	SOUT 2	
8	P54	I	DO IN for tuner	
9	P53	O	Full mute out	[L : ON]
10	P52	I	SCLK IN RDS	
11	P51	I/O	V2 market / RES OUT RDS	
12	P50	I/O	V1 market / SDATA IN RDS	
13	P65	I	RDS SELECT IN	[H : RDS]
14	P64	I	DSP-A SELECT IN	[H : DSPA]
15	P63	I	492 SELECT IN	[H : 492]
16	P62	I	V392 SELECT IN	[H : V392]
17	P61	O	Speaker relay out (Center & Rear)	[EFFECT ON or 6ch or TEST mode : H]
18	P60	O	OPEN	
19	P47	O	CETUN for tuner	
20	P46	O	TMUTE for tuner	[L : ON]
21	P45	I/O	Standby = Pull up	[L : LED ON]

Protection 1 (3 pin)
Detection of an abnormal power supply voltage. Normal when AD value (37 - 74)/256. Detection starts 2 seconds after the power is turned ON.
50ms wait time before detection

Protection 2 (4 pin)
Detection of an abnormal amplifier DC. Normal when AD value (3 - 35)/256.
Detection starts 2 seconds after the power is turned ON.

Protection 3 (5 pin)
Detection of an abnormal amplifier overcurrent. Abnormality detected at H.
Detection starts after the power is turned ON.

Pin No.	Port	I/O	Function	
22	P44	I	/ST for tuner	[L : STEREO]
23	P43	I	Power switch in	[H : ON]
24	P42	I	Power down detect	[L : DOWN]
25	P41	I	REMOTE CONTROL IN	(INT1)
26	P40	I	START IN RDS	(INT0)
27	RES		RESET	
28	XCIN		GND	
29	XCOUT		OPEN	
30	XIN		6.3 MHz IN (CLOCK)	
31	XOUT		6.3 MHz OUT (CLOCK)	
32	VSS		GND	
33	P27	O	VIDEO SELECTOR A	(VSEL1)
34	P26	O	VIDEO SELECTOR B	(VSEL2)
35	P25	O	NOT VCR SELECT	[H : VCR]
36	P24	O	CE VR	
37	P23	O	CE SEL	
38	P22	O	CE DSP	
39	P21	O	VOL UP OUT	
40	P20	O	VOL DOWN OUT	
41	P17	O	DSP SERIAL SELECT	[H : DSP]
42	P16	O	POWER RELAY OUT	[H : ON]
43	P15	O	SPEAKER RELAY OUT (MAIN)	[H : ON]
44	P14	O	FL DIGIT 1	[H : ON]
45	P13	O	FL DIGIT 2	[H : ON]
46	P12	O	FL DIGIT 3	[H : ON]
47	P11	O	FL DIGIT 4	[H : ON]
48	P10	O	FL DIGIT 5	[H : ON]
49	P07	O	FL DIGIT 6	[H : ON]
50	P06	O	FL DIGIT 7	[H : ON]
51	P05	O	FL DIGIT 8	[H : ON]
52	P04	O	FL DIGIT 9	[H : ON]
53	P03	O	FL DIGIT 10	[H : ON]
54	P02	O	FL DIGIT 11	[H : ON]
55	P01	O	FL DIGIT 12	[H : ON]
56	P00	O	FL DIGIT 13	[H : ON]
57	P37	O	FL SEGMENT 16	[H : ON]
58	P36	O	FL SEGMENT 15	[H : ON]
59	P35	O	FL SEGMENT 14	[H : ON]
60	P34	O	FL SEGMENT 13	[H : ON]
61	P33	O	FL SEGMENT 12	[H : ON]
62	P32	O	FL SEGMENT 11	[H : ON]
63	P31	O	FL SEGMENT 10	[H : ON]
64	P30	O	FL SEGMENT 9	[H : ON]
65	P87	O	FL SEGMENT 8	[H : ON]
66	P86	O	FL SEGMENT 6	[H : ON]
67	P85	O	FL SEGMENT 5	[H : ON]
68	P84	O	FL SEGMENT 4	[H : ON]
69	P83	O	FL SEGMENT 3	[H : ON]
70	P82	O	FL SEGMENT 2	[H : ON]
71	P81	O	FL SEGMENT 1	[H : ON]
72	P80	O	FL SEGMENT 0	[H : ON]
73	VCC		+5V	
74	VEE		-21V	
75	AVSS		GND	
76	VREF		A-D REFERENCE VOLTAGE IN (+5V)	
77	P77	I	KEY AD IN 5	(A-D)
78	P76	I	KEY AD IN 4	(A-D)
79	P75	I	KEY AD IN 3	(A-D)
80	P74	I	KEY AD IN 2	(A-D)

IC17 : YSS203B
Digital Dolby Pro Logic Decoder with Auto Input Balance

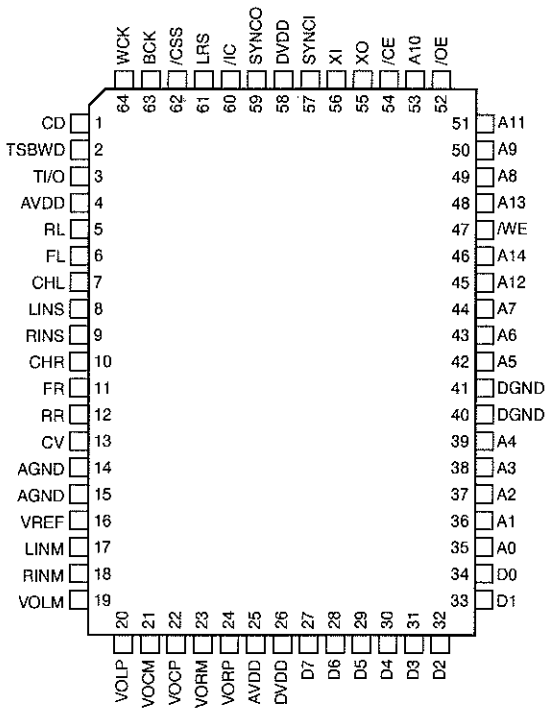

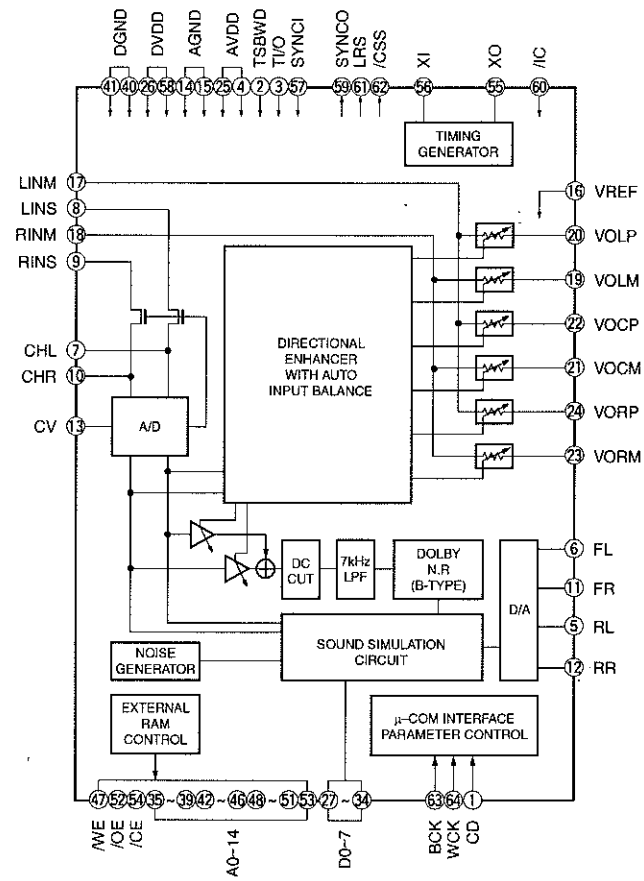

No.	Name	I/O	Function
1	CD	Its	Serial data of parameter data input
2	TSBWD	Ic	LSI test terminal Normally connected to DVDD terminal
3	TI/O	Ic	LSI test terminal Normally connected to DVDD terminal
4	AVDD	A—	+5V power supply (D/A, A/D section)
5	RL	AO	RL channel D/A output
6	FL	AO	FL channel D/A output
7	CHL	A—	LINS input Sample/hold Capacitor external terminal
8	LINS	AI	L channel A/D input
9	RINS	AI	R channel A/D input
10	CHR	A—	RINS input Sample/hold Capacitor external terminal
11	FR	AO	FR channel D/A output
12	RR	AO	RR channel D/A output
13	CV	AO	A/D, multiplying DAC center voltage
14	AGND	A—	Ground (D/A, A/D section)
15	AGND	A—	Ground (Multiplying DAC section)
16	VREF	AI	Multiplying DAC reference voltage input
17	LINM	AI	L channel Multiplying DAC input
18	RINM	AI	R channel Multiplying DAC input
19	VOLM	AO	L channel operation amplifier, connected to (–) terminal
20	VOLP	AO	L channel operation amplifier, connected to (+) terminal

No.	Name	I/O	Function
21	VOCM	AO	C channel operation amplifier, connected to (–) terminal
22	VOCP	AO	C channel operation amplifier, connected to (+) terminal
23	VORM	AO	R channel operation amplifier, connected to (–) terminal
24	VORP	AO	R channel operation amplifier, connected to (+) terminal
25	AVDD	A—	+5V power supply (multiplying DAC section)
26	DVDD	—	+5V power supply (digital section)
27	D7	I/Ot	External delay RAM data terminal
28	D6	I/Ot	External delay RAM data terminal
29	D5	I/Ot	External delay RAM data terminal
30	D4	I/Ot	External delay RAM data terminal
31	D3	I/Ot	External delay RAM data terminal
32	D2	I/Ot	External delay RAM data terminal
33	D1	I/Ot	External delay RAM data terminal
34	D0	I/Ot	External delay RAM data terminal
35	A0	O	External data RAM address terminal
36	A1	O	External data RAM address terminal
37	A2	O	External data RAM address terminal
38	A3	O	External data RAM address terminal
39	A4	O	External data RAM address terminal
40	DGND	—	Ground (digital section)
41	DGND	—	Ground (digital section)
42	A5	O	External data RAM address terminal
43	A6	O	External data RAM address terminal
44	A7	O	External data RAM address terminal
45	A12	O	External data RAM address terminal
46	A14	O	External data RAM address terminal
47	/WE	O	External delay RAM write enable terminal
48	A13	O	External dalay RAM address terminal
49	A8	O	External dalay RAM address terminal
50	A9	O	External dalay RAM address terminal
51	A11	O	External dalay RAM address terminal
52	/OE	O	External dalay RAM output enable terminal
53	A10	O	External dalay RAM address terminal
54	/CE	O	External delay RAM chip enable terminal
55	XO	O	Crystal oscillator connecting terminal
56	XI	I	Crystal oscillator connecting terminal
57	SYNCI	It	Test terminal for system synchronization, normally connected to DVDD
58	DVDD	—	+5V power supply (digital section)
59	SYNCO	O	Test terminal for system synchronization, normally unconnected
60	/IC	Ics	Initial clear terminal (Power ON resetting is necessary)
61	LRS	O	External automatic input balance terminal, normally unconnected
62	/CSS	O	External automatic input balance terminal, normally unconnected
63	BCK	Its	Bit clock for parameter data input
64	WCK	Its	Word clock for parameter data input

Note : Letters used in the above I/O column represent as follows.

I : Input terminal **O** : Output terminal **t** : TTL level

c : CMOS level **s** : Schmidt input **A** : Analog terminal

■ PIN CONNECTION DIAGRAM

● ICs

AN78N05

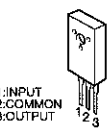

NJM79M12FA

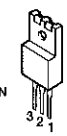

NJM4558L
NJM4558L-D

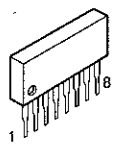

LA7956

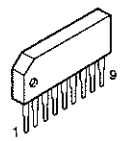

μPC4570HA

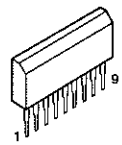

LB1641

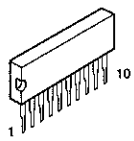

TC9299P

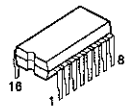

LH5P832D-10

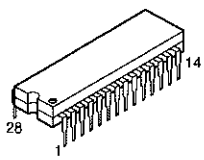

LC78213
LC78211

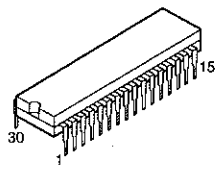

YSS203B

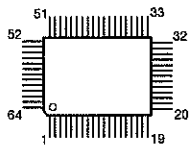

M38172M4-192FP

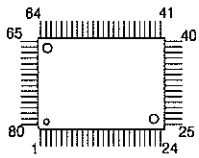

● Diodes

1SS133
1SS270A

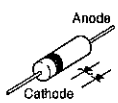

HZS5C2TD
HZS5B2TD
HZS6B2TD
HZS6C2TD
HZS6A2TD
HZS12B2TD
HZS12C2TD
HZS242TD

D5SB20

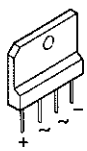

S1NB20

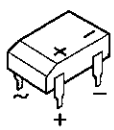

S4VB20

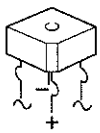

● Transistors

2SA933S (Q, R)
2SA1740S (R, S)
2SD1915F (S, T)
DTA114ES
DTC144ES

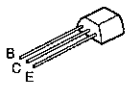

2SA1708 (S, T)
2SC4488 (S, T)

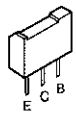

2SA893A (D, E)
2SA970 (GR, BL)
2SA1015 (Y)
2SA2878 (R, S)

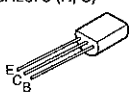

2SC535 (A, B, C)
2SC1815 (Y)
2SC1890A (D, E)
2SC2061 (P, Q, R)
2SC2229 (O, Y)
2SC2240 (GR, BL)

2SA1358 (O, Y)
2SC3421 (O, Y)

2SA1492Z (O, P, Y)
2SC3856Z (O, P, Y)
2SA1693 (O, P, Y)
2SC4466 (O, P, Y)
2SA1962 (R, O)
2SC5242 (R, O)

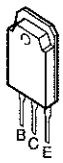

2SD856 (P, Q)
2SD2396 (J, K)

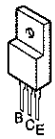

■ PRINTED CIRCUIT BOARD (Foil side) /シート図（パターン側）

Point ① (Pin55 of IC17)
V : 2V/div H : 50 nsec/div
DC range 1 : 1 probe

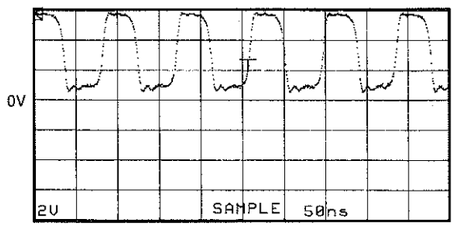

P. C. B. INPUT (1)

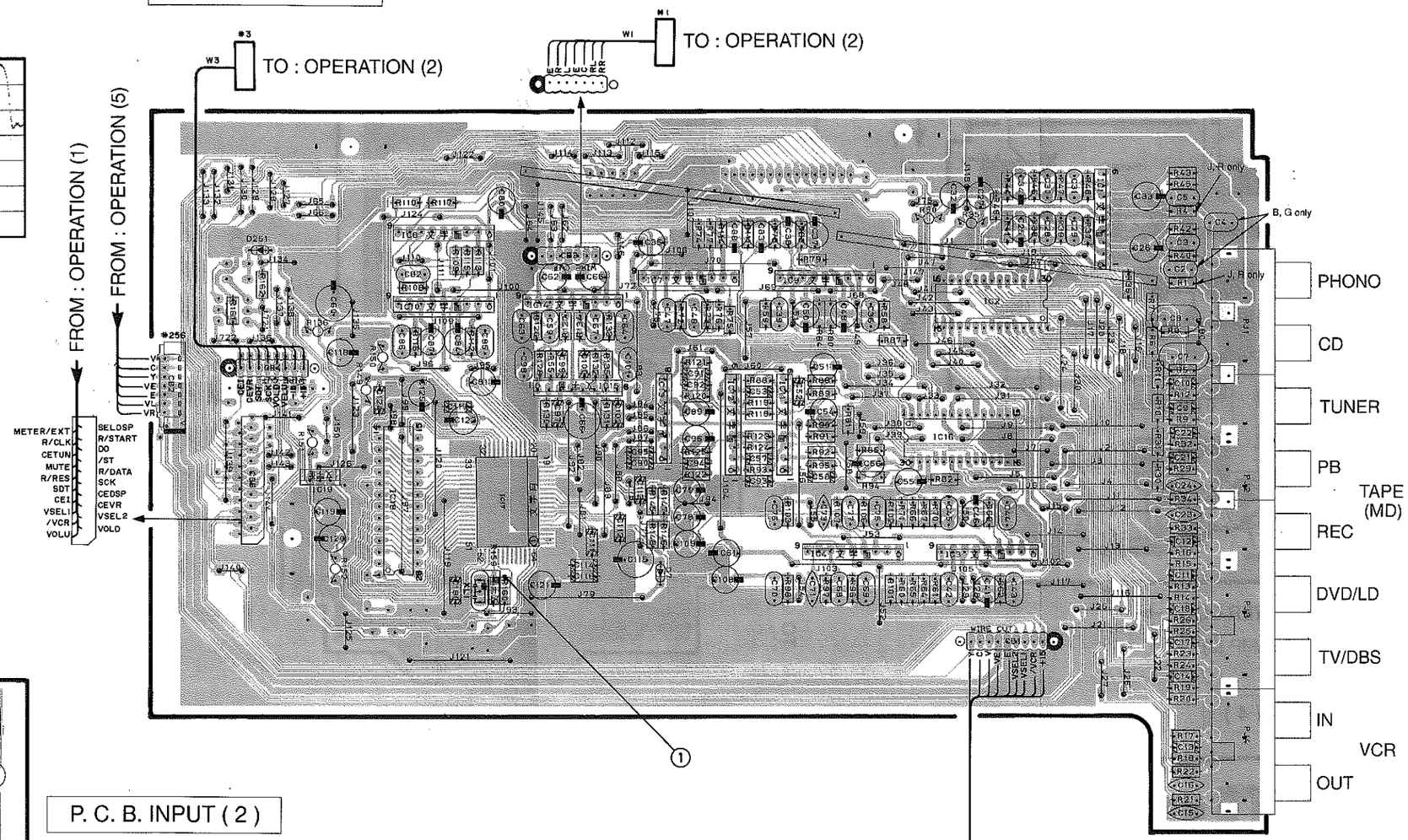

P. C. B. INPUT (2)

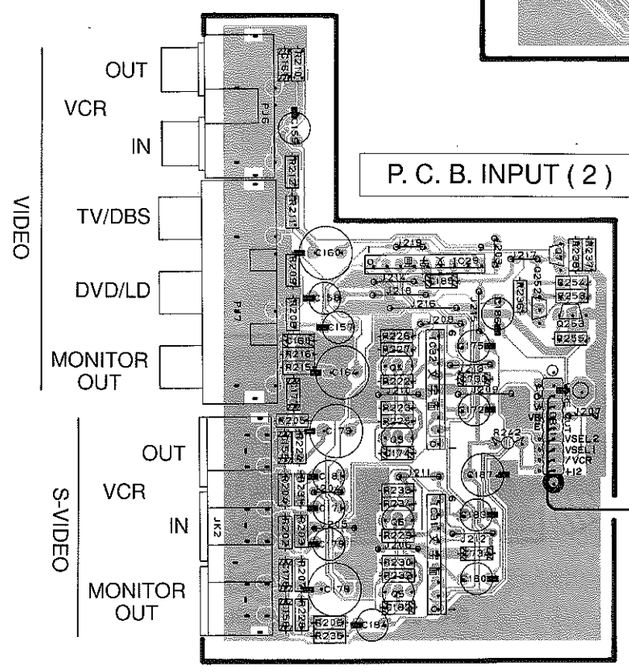

■ PRINTED CIRCUIT BOARD (Foil side) /シート図（パターン側）

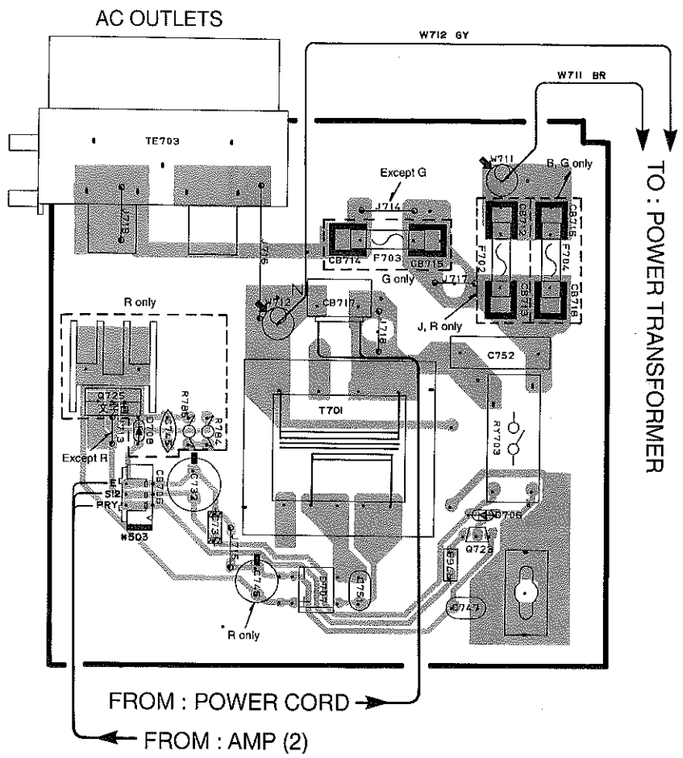

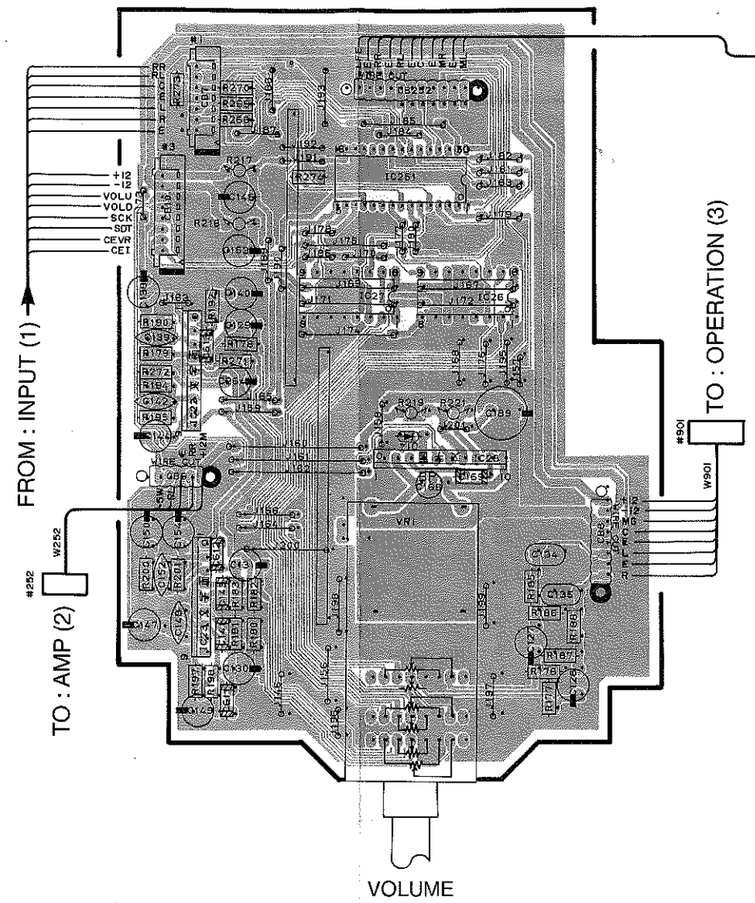

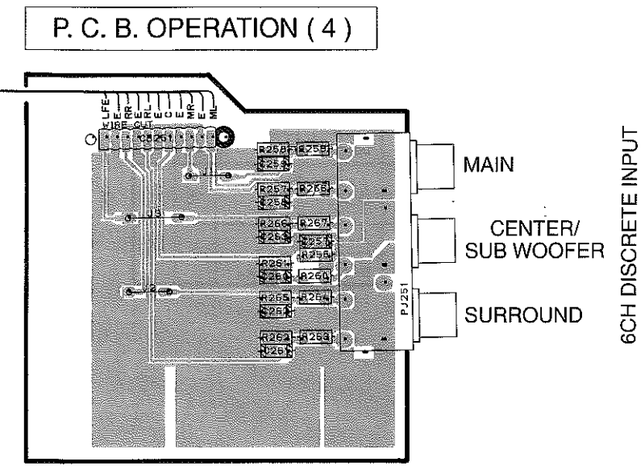

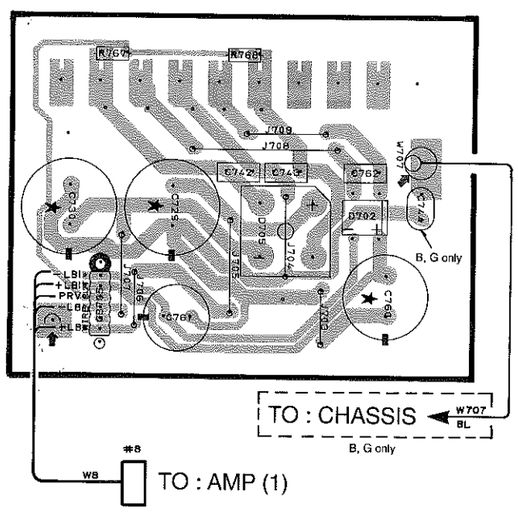

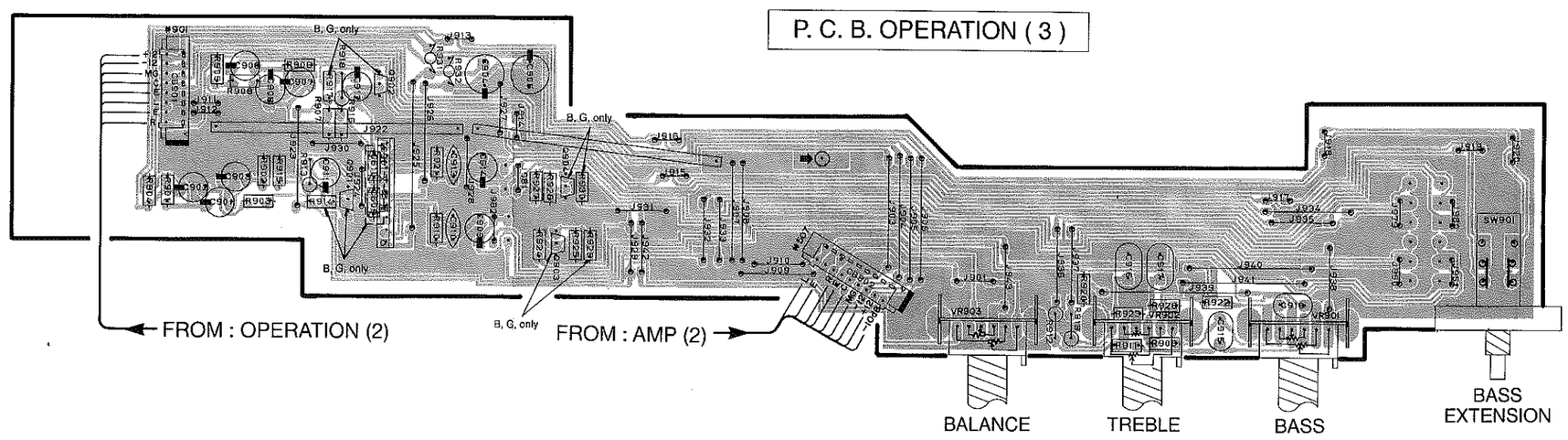

■ PRINTED CIRCUIT BOARD (Foil side) /シート図（パターン側）

P. C. B. OPERATION (1)

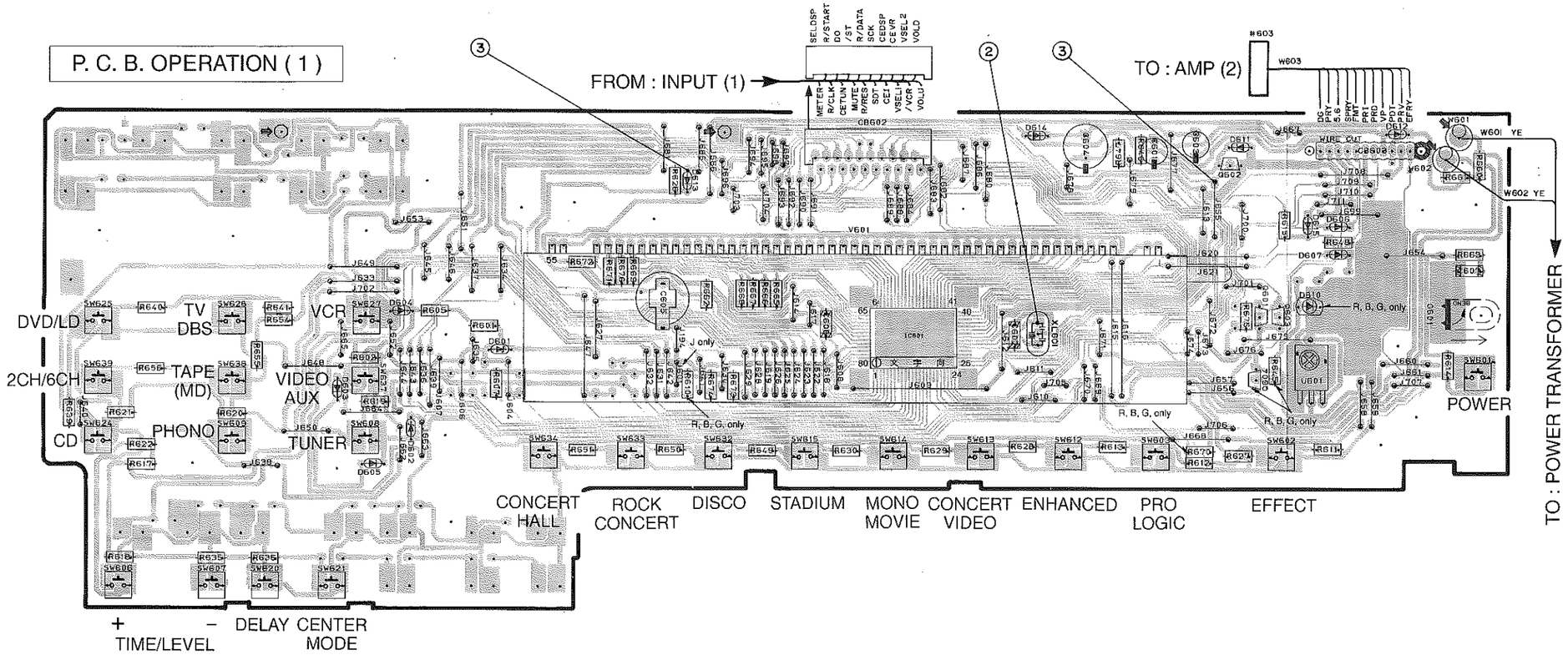

P. C. B. OPERATION (5)

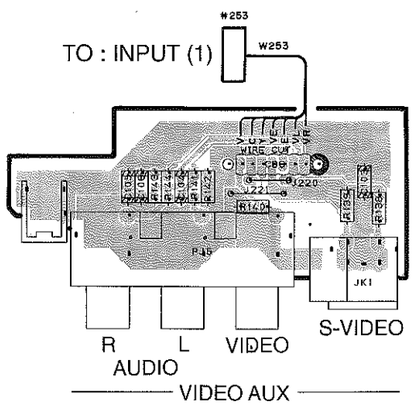

Point ② (Pin31 of IC601)
V : 2V/div H : 0.1 μsec/div
DC range 1 : 1 probe

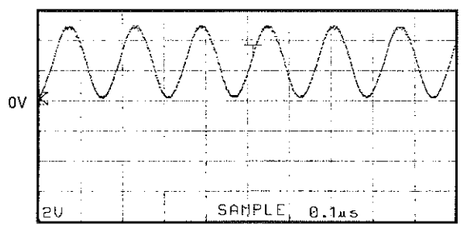

Point ③

CH1 : Anode of D613 V : 2V/div (CH1)
CH2 : Pin27 of IC601 V : 2V/div (CH2)

H : 0.5 sec/div DC range 1 : 1 probe

(This waveform is not available by pushing the power switch ON and OFF.)

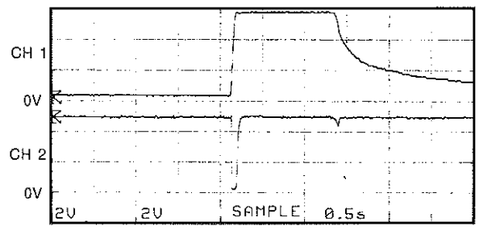

With the POWER ON, disconnect the A/C power cord. Reconnect the A/C power cord and the above waveforms will start.

Disconnect the power cord from the AC outlet.

■ PRINTED CIRCUIT BOARD (Foil side) /シート図（パターン側）

P. C. B. AMP (3)

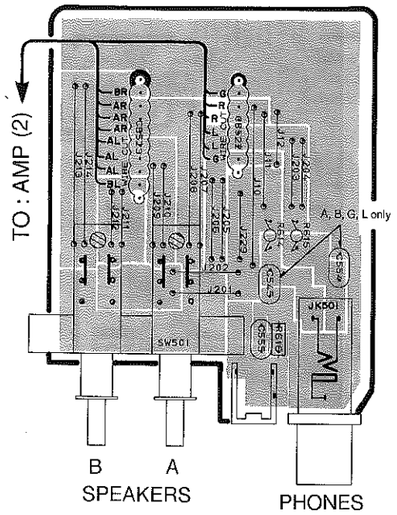

P. C. B. AMP (1)

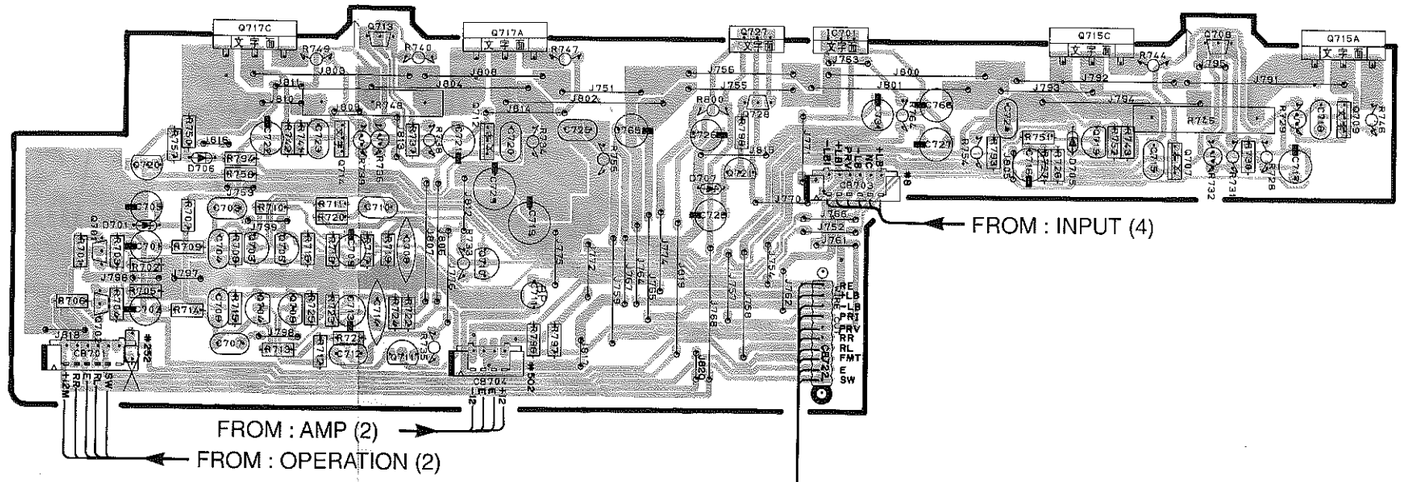

P. C. B. AMP (4)

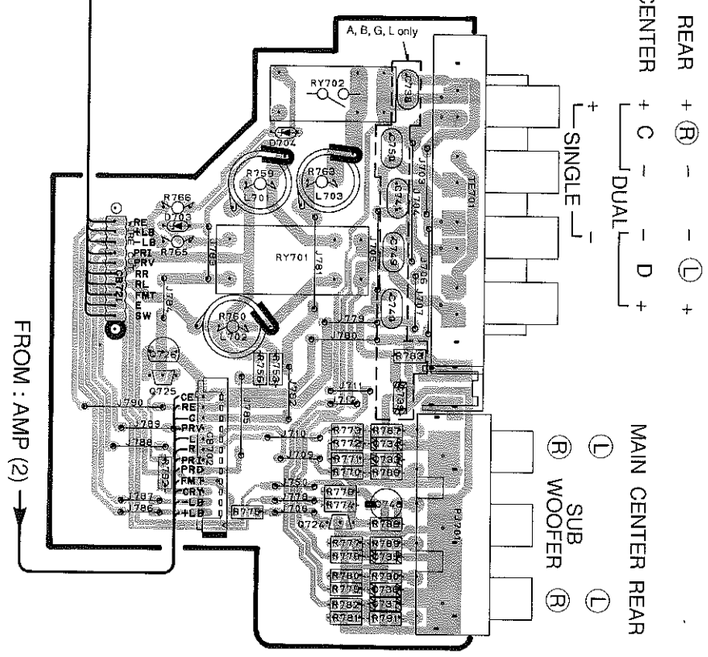

P. C. B. AMP (5)

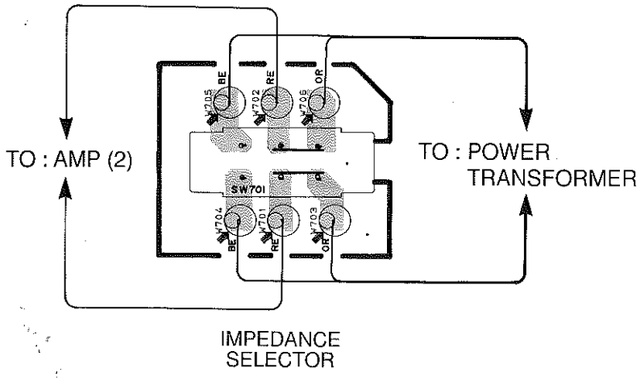

P. C. B. AMP (6)

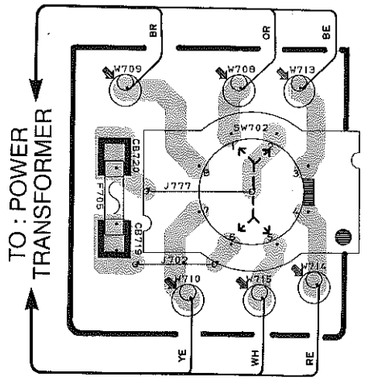

VOLTAGE SELECTOR

240V	1–2/5–6
220V	2–3/6–7
110V	3–4/7–8
120V	4–5/8–1

■ PRINTED CIRCUIT BOARD (Foil side) /シート図（パターン側）

P. C. B. AMP (2)

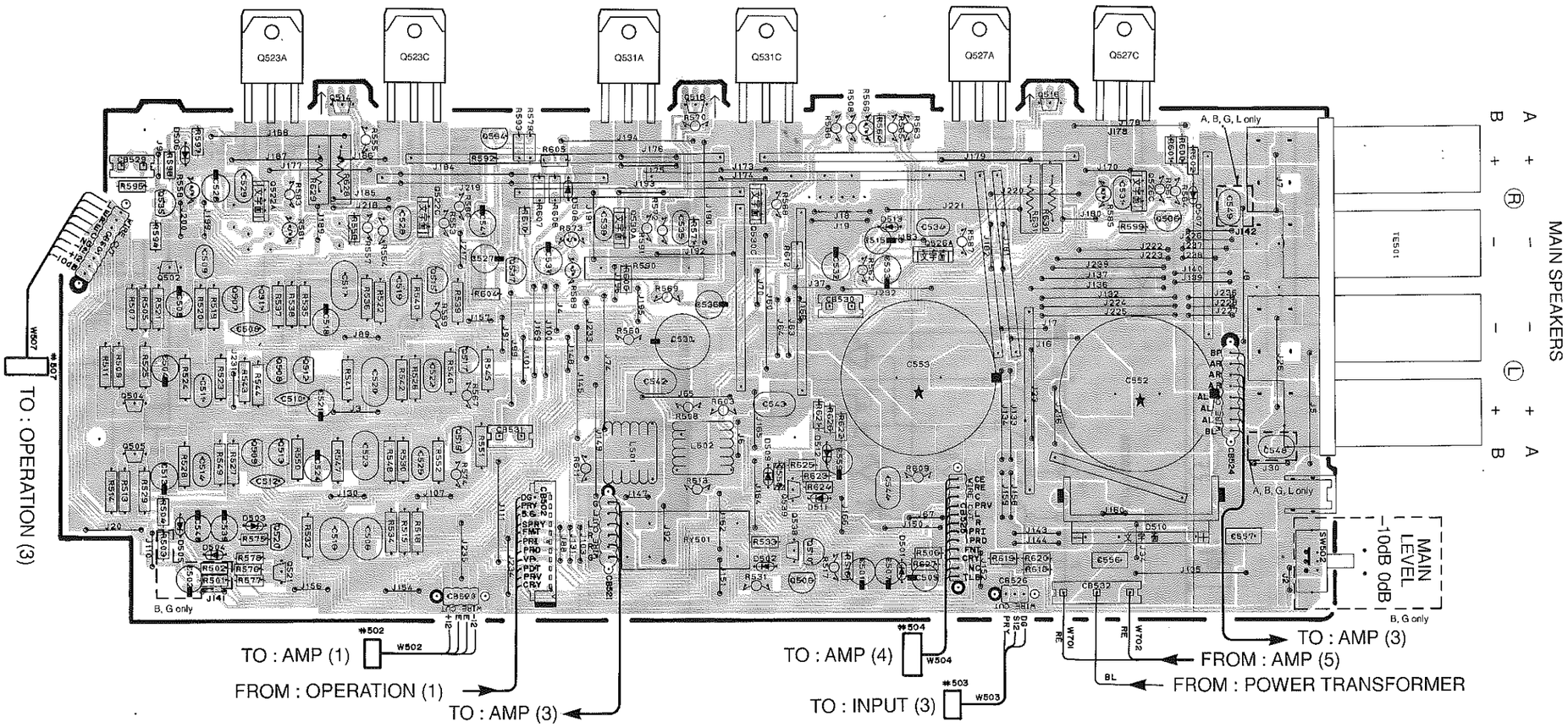

P. C. B. AMP (7)

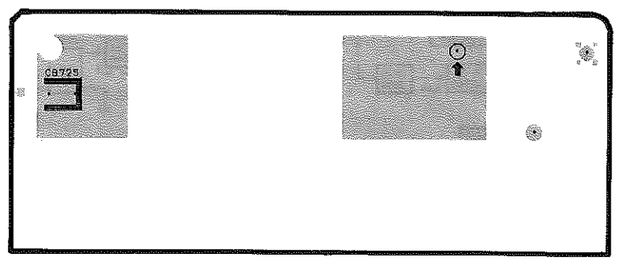

Note) Mounting of C546, 547, 550, 551 shown as below.
(B, G models only)

MAIN SPEAKERS

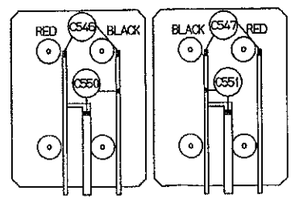

■ BLOCK DIAGRAM /ブロックダイアグラム

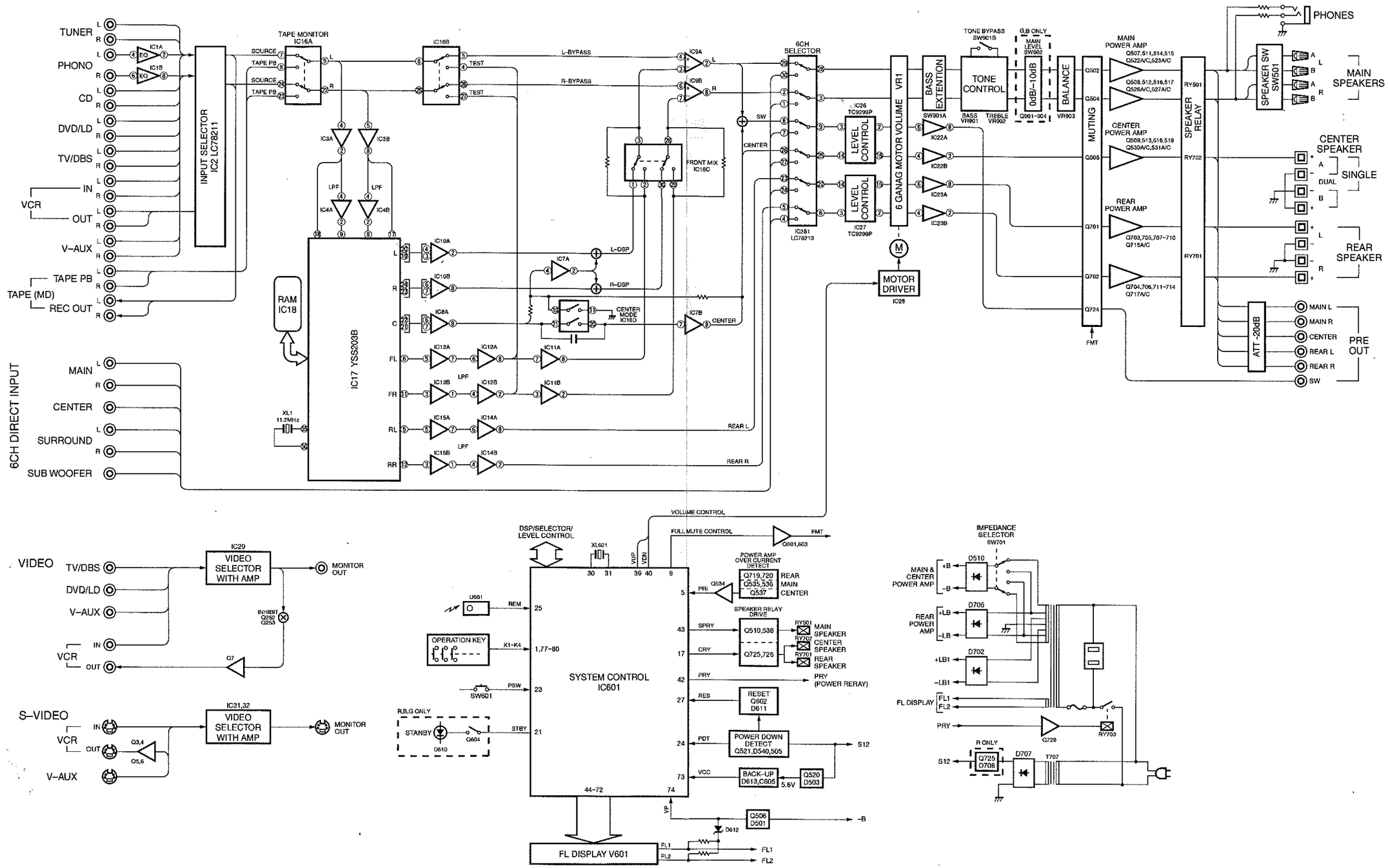

SCHEMATIC DIAGRAM (INPUT) /総回路図

CAPACITOR

REMARKS	PARTS NAME	
NO MARK	ELECTROLYTIC CAPACITOR	‖
⊗	TANTALUM CAPACITOR	
NO MARK	CERAMIC CAPACITOR	‖
◉	CERAMIC TUBULAR CAPACITOR	
◎	POLYESTER FILM CAPACITOR	
○	POLYSTYRENE FILM CAPACITOR	
⊕	MICA CAPACITOR	
⊗	POLYPROPYLENE FILM CAPACITOR	
●	SEMICONDUCTIVE CERAMIC CAPACITOR	

RESISTOR

REMARKS	PARTS NAME
NO MARK	CARBON FILM RESISTOR [P=5]
☑	CARBON FILM RESISTOR [P=10]
△	METAL OXIDE FILM RESISTOR
▲	METAL FILM RESISTOR
⊠	METAL PLATE RESISTOR
◪	FIRE PROOF CARBON FILM RESISTOR
□	CEMENT MOLDED RESISTOR
⊘	SEMI VARIABLE RESISTOR
■	CHIP RESISTOR

Interchangeable Parts at Manufacture-Stage

Mark	Reference Parts Number	Parts Name
k1	IC6.30	TC40538P UPD40538C
k2	D7.251.706	HSS104 1SS133 1SS176
k3	D1.2	HZ5B2TD HTZJ5.1B
k4	D13.14	HZ5C2TD HTZJ5.1B
k5	IC18	HM65256BLSP-10 TC51832ASPL-10
k6	Q253.723	2SC1740S(R/S) 2SC2603(E/F) 2SC3311A(Q/R/S)
k7	PJ11.2.4	RJ-1073-09-0351A YKC21-3049
k8	PJ5	RJ-1078-04-351A HSP-252V2-67
k9	PJ7	RJ-1086-04-0352A YKC21-3111
k10	IC15	LC78213 LC7823N

	MODEL No.					
s	Circuit No.	J	R		B	G
1	Q725	X	2SB561(J/K) VR51050		X	X
2	J713	0	X		0	0
3	C745	X	1000P F261310		X	X
4	Q708	X	HZS1252 VM97560		X	X
5	R784.785	X	5.6K RV75556		X	X
6	C746	X	47/63 UA67747		X	X
7						
8	T701	XC542 XS597	XT331 XT341		XO486 XC084	XO486 XC084
9	TE703	VV11890	VV11680		VU54330	VU54340
10	J714	0	0		0	X
11	CB714.715	X	X		X	VP20550
12	F703					T2.5AL250V K60030B
13	F702	7A125V VP90590	7A125V VP90050		X	X
14	CB712.713	VP20550	VP20550		X	X
15	C744	X	X		0.1 UA65510	0.1 UA65510
16	W207	X	X		NH20225	NH20225
17	CB716.718	X	X		VP20550	VP20550
18	F704	X	X		T3.15AL250V	T3.15AL250V
19	RY703	YU34980 YU39850 YH23080	YY73530		YU34980 YU39850 YH23080	YU34980 YU39850 YH23080
20	C2.4	X	X		100P	100P
21	R1.4	47	47		X	X

IC2 : LC78211
Analog Function Switch

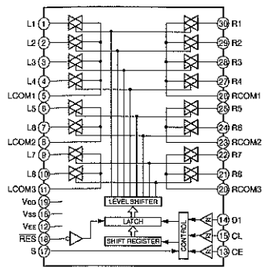

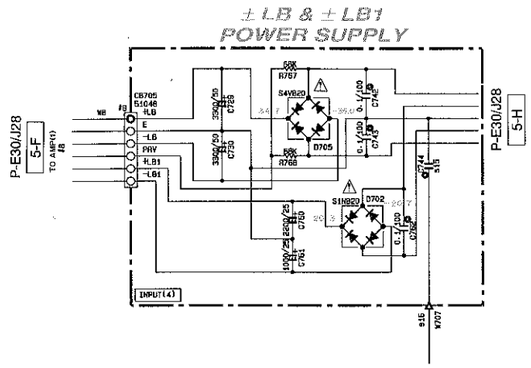

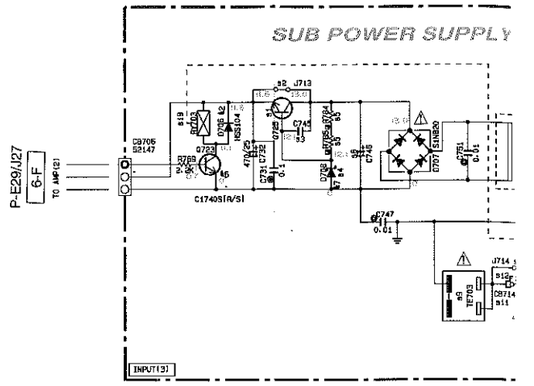

IC16 : LC78213
Analog Function Switch

IC18 : LH5P
256K Pseud

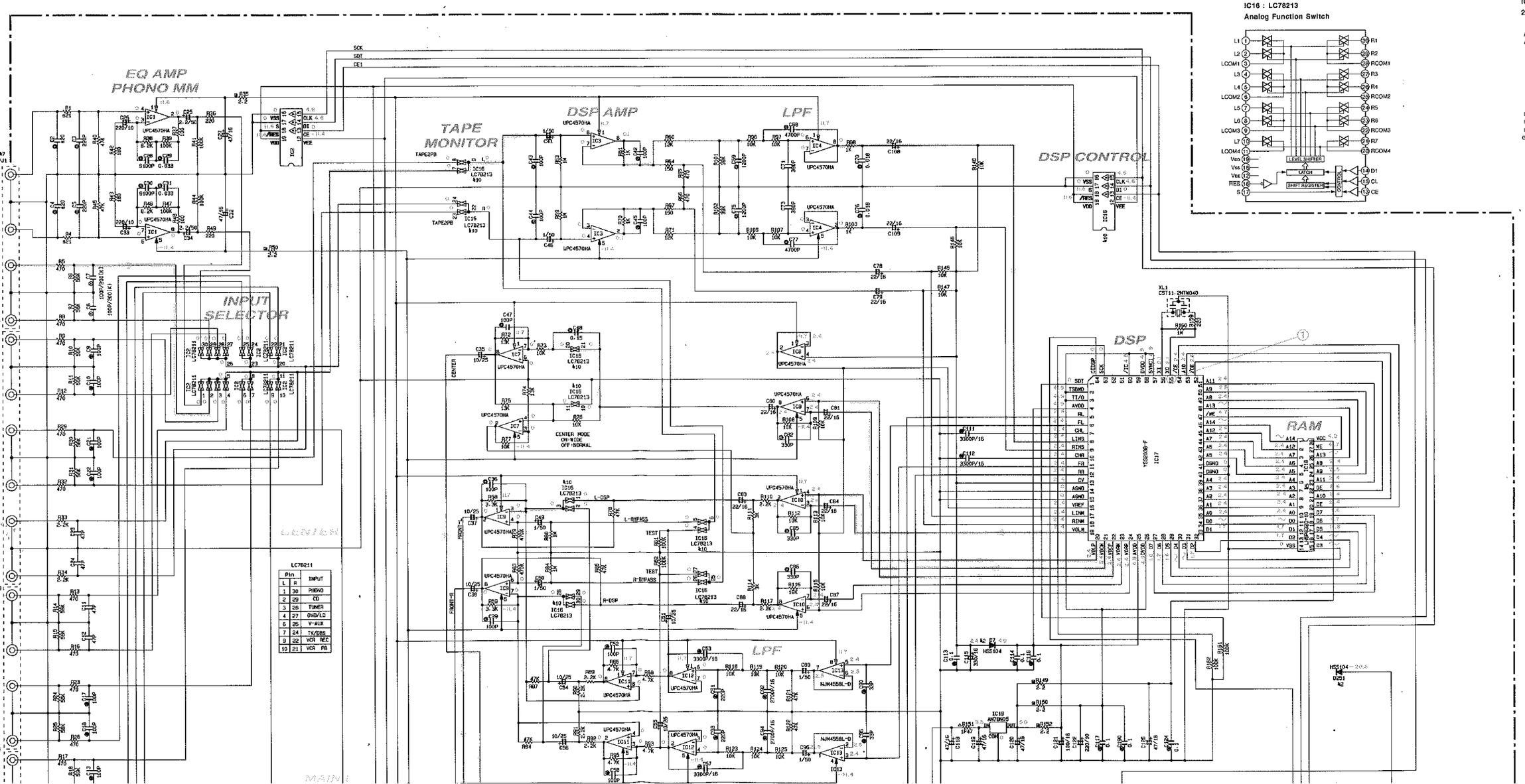

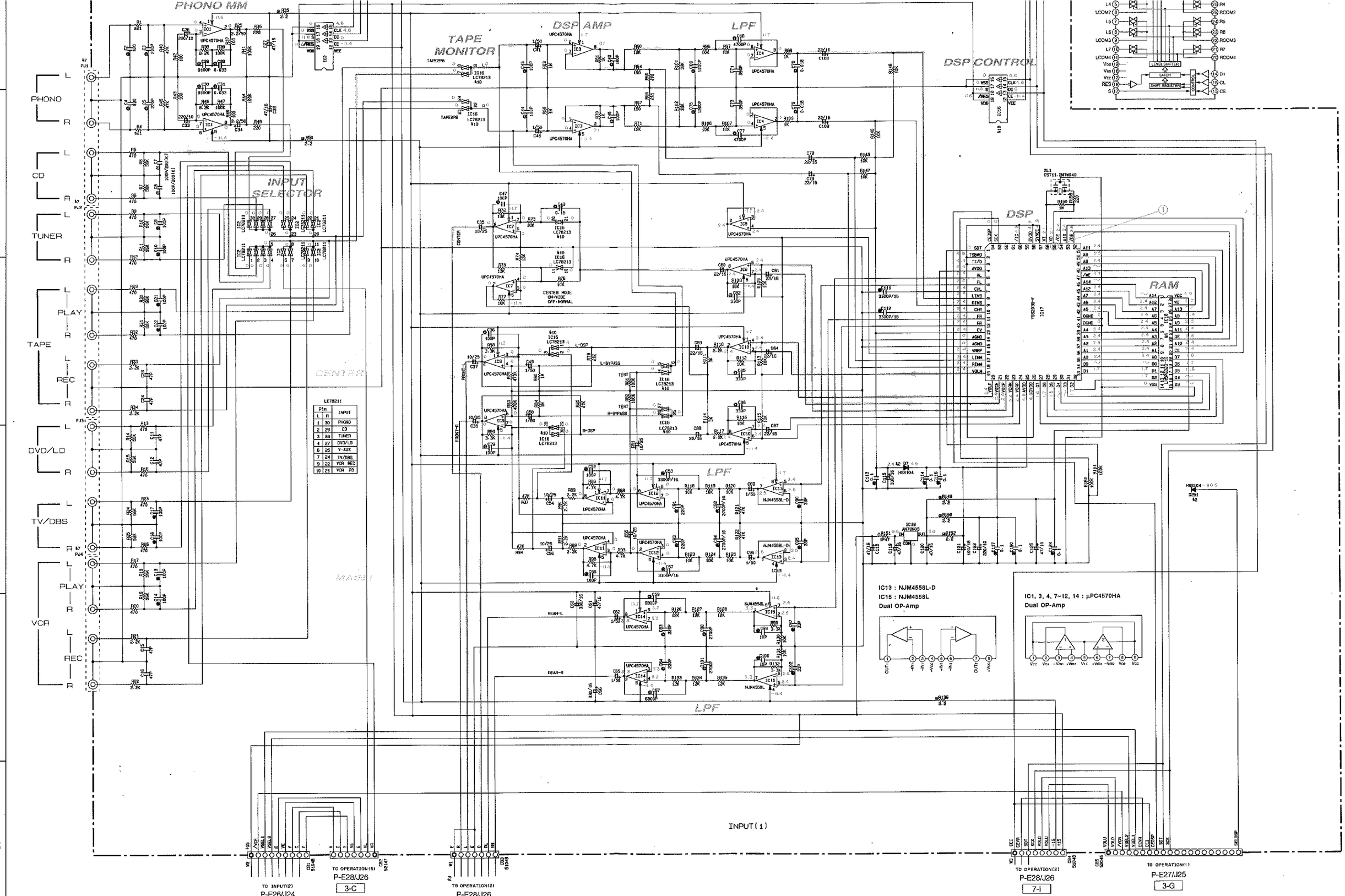

Pin L	Pin R	INPUT
1	30	PHONO
2	29	CD
3	28	TUNER
4	27	DVD/LD
6	25	V-AUX
7	24	TV/DBS
9	22	VCR REC
10	21	VCR PB

* All voltage are measured with a 10MΩ/V DC el
* Components having special characteristics are
replaced with parts having specifications equal t
* Schematic diagram is subject to change withou

R	B	G
1996[μ/K]	X	X
R51050		
X	0	0
1000P	X	X
061310		
IZS1282	X	X
M97560		
5.6K	X	X
W75656		
47/63	X	X
U87747		
T331	X0498	X0496
T341	X0894	X0894
V11880	VU54330	VU54340
0	0	X
X	X	VP20650
		T2. 5AL250V
		X900308
A125V	X	X
P90090		
VP20650	X	X
X	0. 1	0. 1
	UA65510	UA65510
X	NH20225	NH20225
X	VP20650	VP20650
X	T3. 15AL250V	T3. 15AL250V
Y73530	VU34380	VU34380
	VU39050	VU39050
	VH23080	VH23080
X	100P	100P
47	X	X

IC2 : LC78211
Analog Function Switch

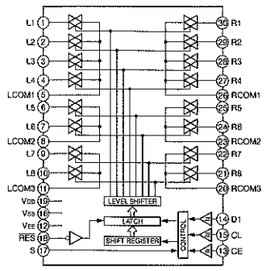

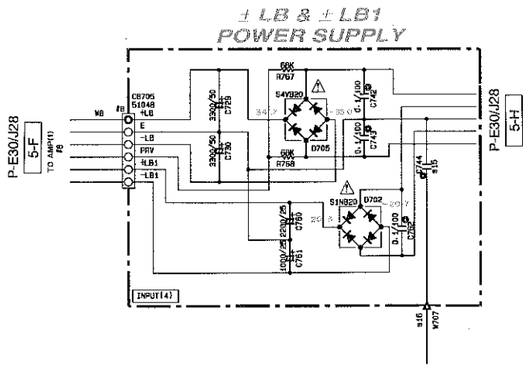

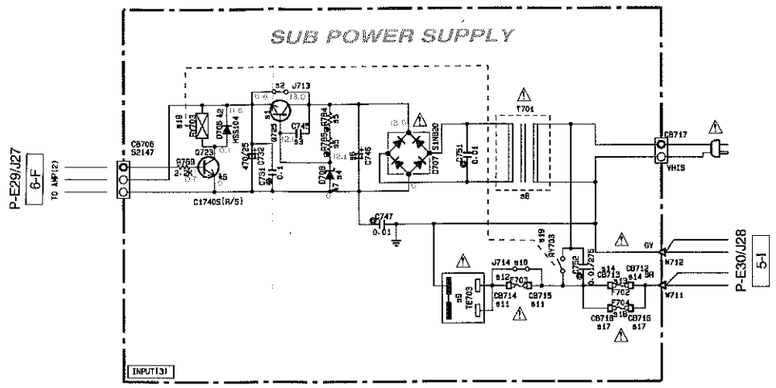

Point ① (Pin55 of IC17)
V : 2V/div H : 50 nsec/div
DC range 1 : 1 probe

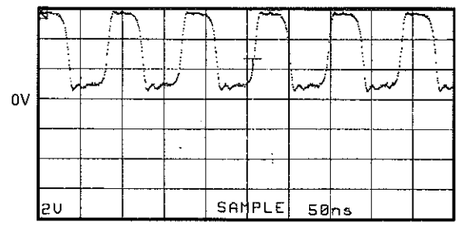

IC16 : LC78213
Analog Function Switch

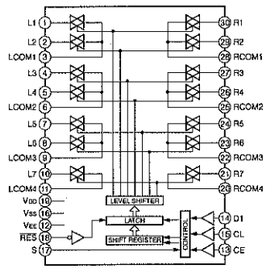

IC18 : LH5P8832D-10
256K Pseudo Static RAM

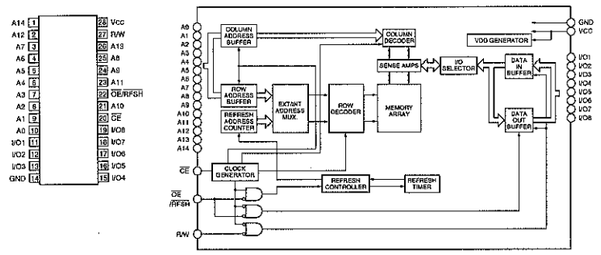

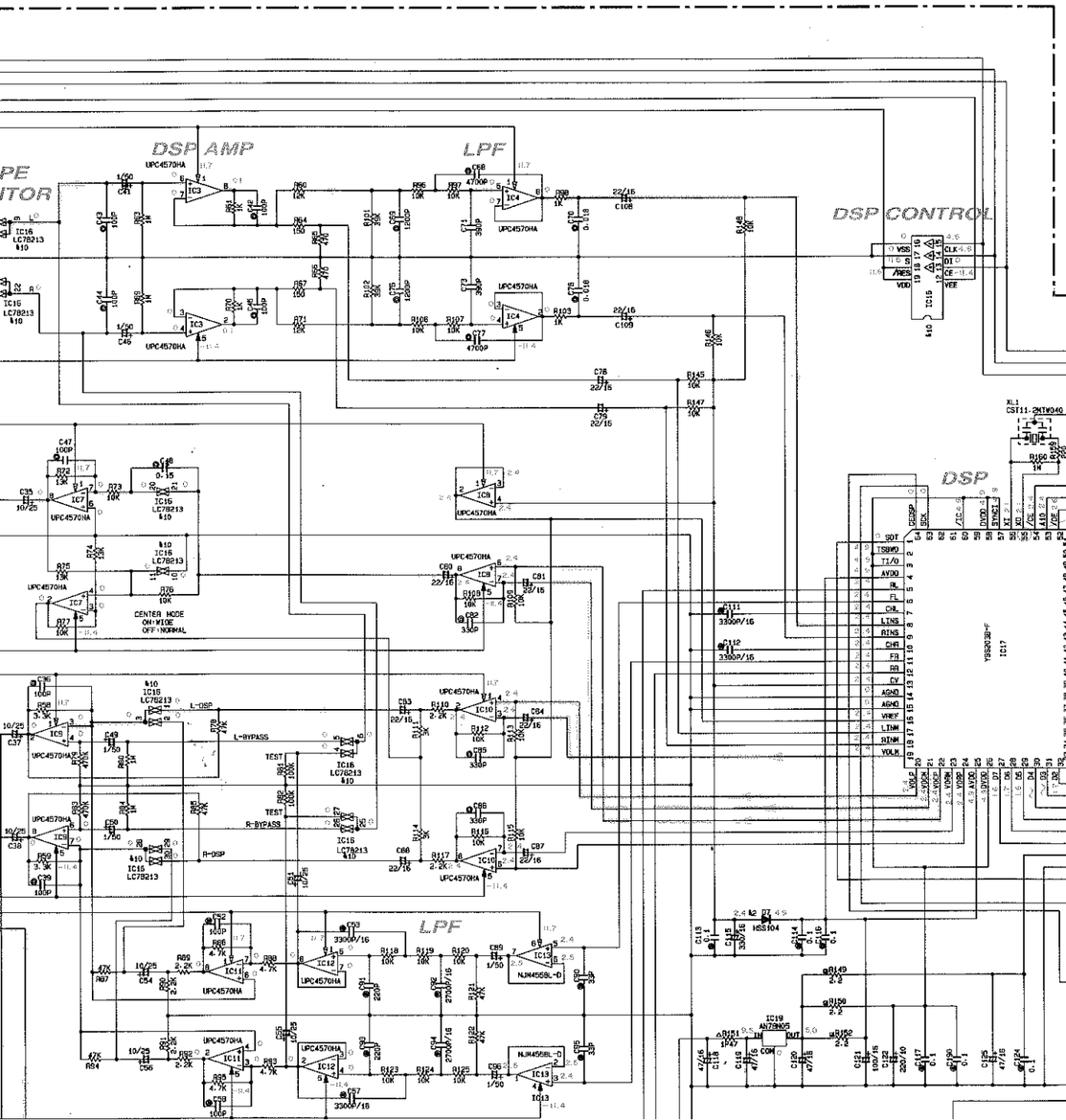

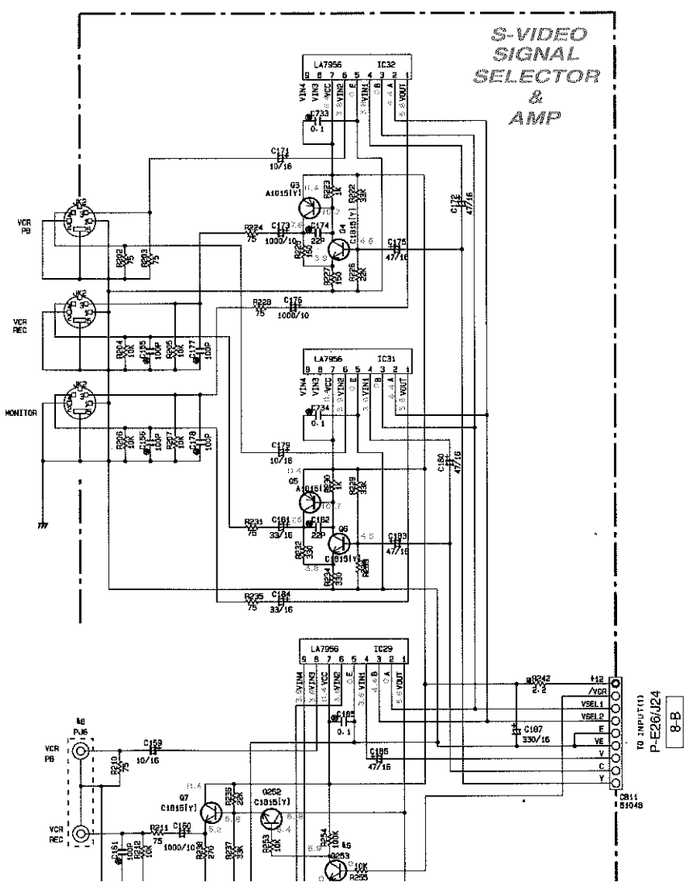

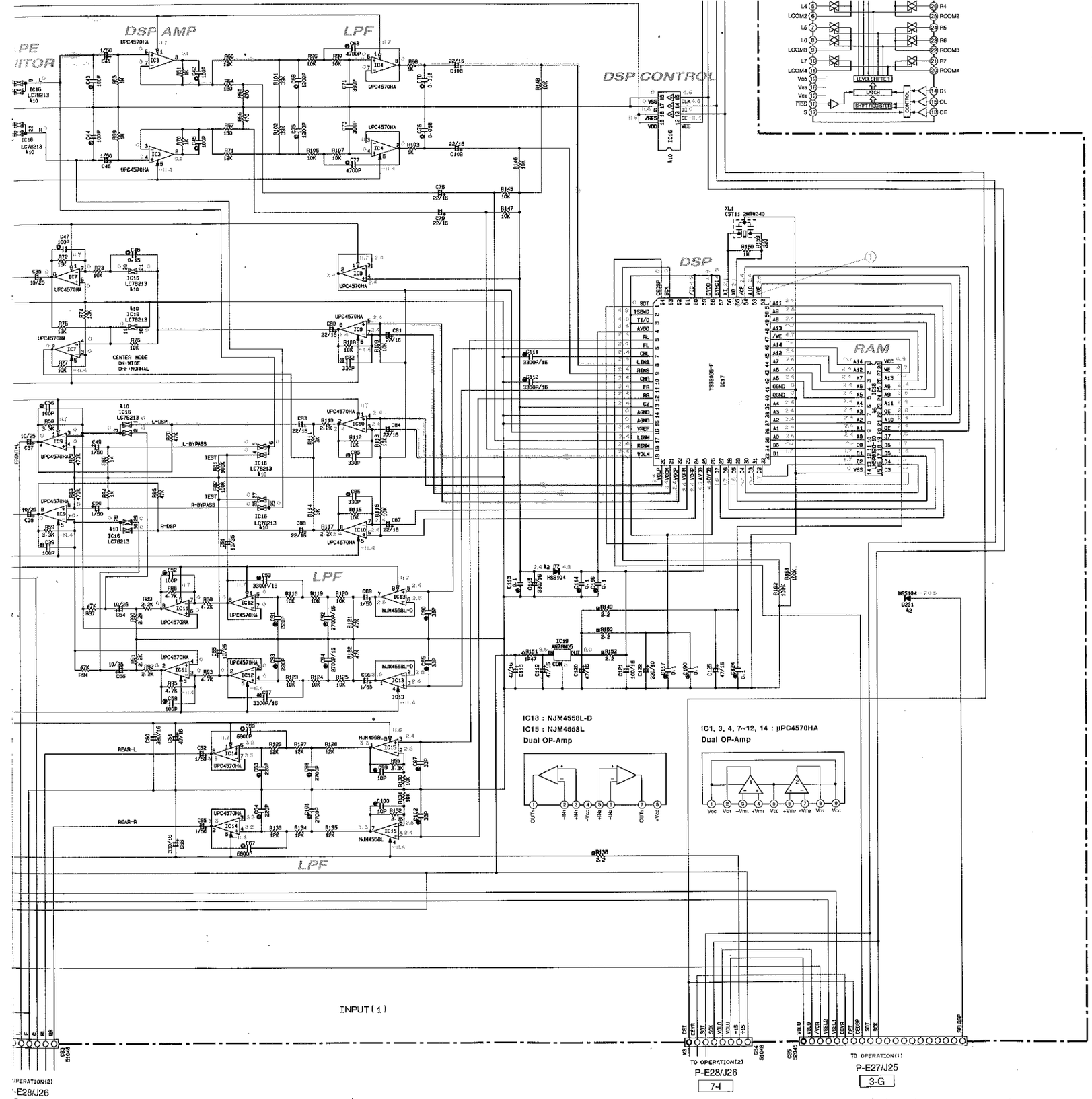

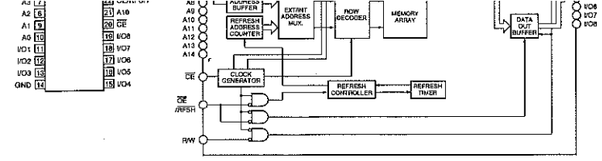

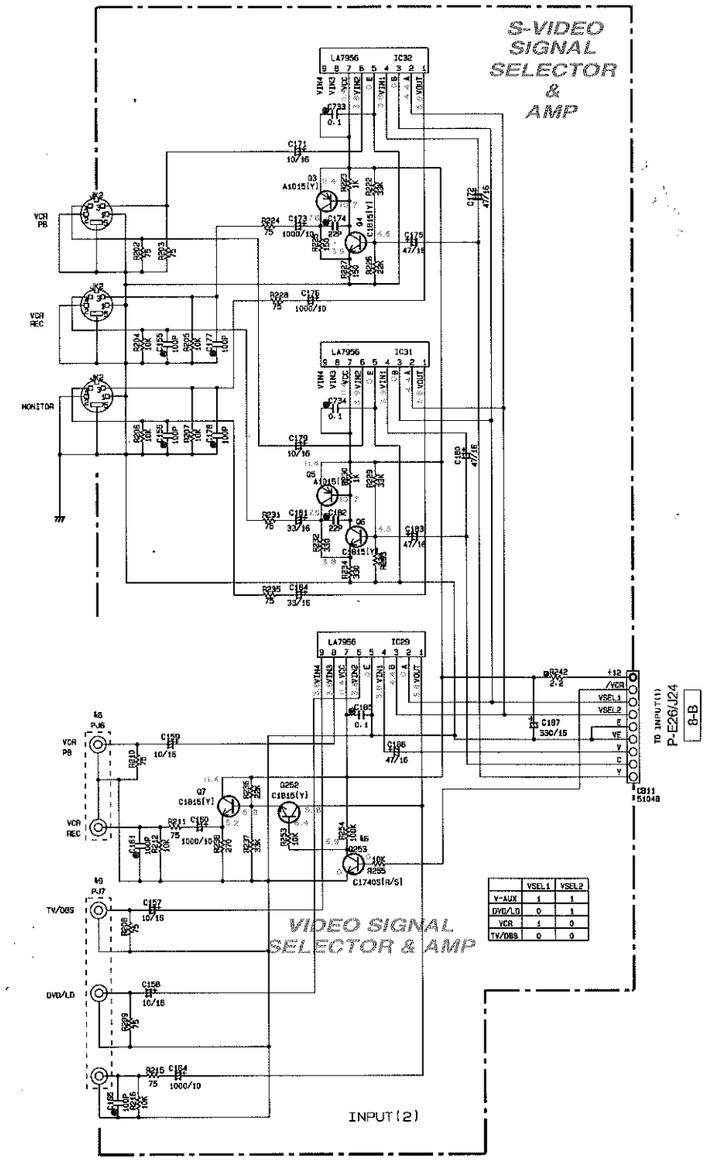

IC29, 31, 32 : LA7956
Video Switch

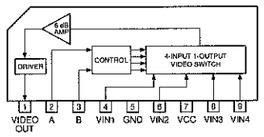

Other ICs

- IC17 : YSS203B → See page E-11/J-9

* *All voltage are measured with a 10MΩ/V DC electric volt meter.*
* *Components having special characteristics are marked ⚠ and must be replaced with parts having specifications equal to those originally installed.*
* *Schematic diagram is subject to change without notice.*

- 電圧は、内部抵抗10MΩの電圧計で測定したものです。
- ⚠印のある部品は、安全性確保部品を示しています。部品の交換が必要な場合、パーツリストに記載されている部品を使用してください。
- 本回路図は標準回路図です。改良のため予告なく変更することがございます。

SCHEMATIC DIAGRAM (OPERATION) /総回路図

RESISTOR

REMARKS	PARTS NAME
NO MARK	CARBON FILM RESISTOR (P=5)
⊘	CARBON FILM RESISTOR (P=10)
△	METAL OXIDE FILM RESISTOR
◭	METAL FILM RESISTOR
⊠	METAL PLATE RESISTOR
◪	FIRE PROOF CARBON FILM RESISTOR
□	CEMENT MOLDED RESISTOR
⊘	SEMI VARIABLE RESISTOR
▤	CHIP RESISTOR

CAPACITOR

REMARKS	PARTS NAME	
NO MARK	ELECTROLYTIC CAPACITOR	⧺
⊗	TANTALUM CAPACITOR	
NO MARK	CERAMIC CAPACITOR	⫼
◉	CERAMIC TUBULAR CAPACITOR	
◎	POLYESTER FILM CAPACITOR	
○	POLYSTYRENE FILM CAPACITOR	
ⓘ	MICA CAPACITOR	
ⓟ	POLYPROPYLENE FILM CAPACITOR	
⊛	SEMICONDUCTIVE CERAMIC CAPACITOR	

NOTICE (model)
(J)····· JAPANESE
(U)····· U.S.A
(C)····· CANADIAN
(R)····· GENERAL
(A)····· AUSTRALIAN
(B)····· BRITISH
(G)····· EUROPEAN
(T)····· CHINA
(L)····· SINGAPORE

		J	R	B,G
s1	J601	0	X	X
s2	R610	X	100K	100K
s3	R670	X	10K	10K
s4	Q604	X	A933S[Q/R] A1115[E/F] A1309A[Q/R/S]	A933S[Q/R] A1115[E/F] A1309A[Q/R/S]
s5	R645	X	470	470
s6	D610	X	SLR-325VC	SLR-325VC
s7				
s8				
s9				

Interchangeable Parts at Manufacture-Stage

Mark	Reference Parts Number	Parts Name
⧺1	Q501	2SC1740S[R/S] 2SC2603[E/F] 2SC3311A[Q/R/S]
⫼2	D603-607.611.613-615	HSS104 1SS133 1SS176

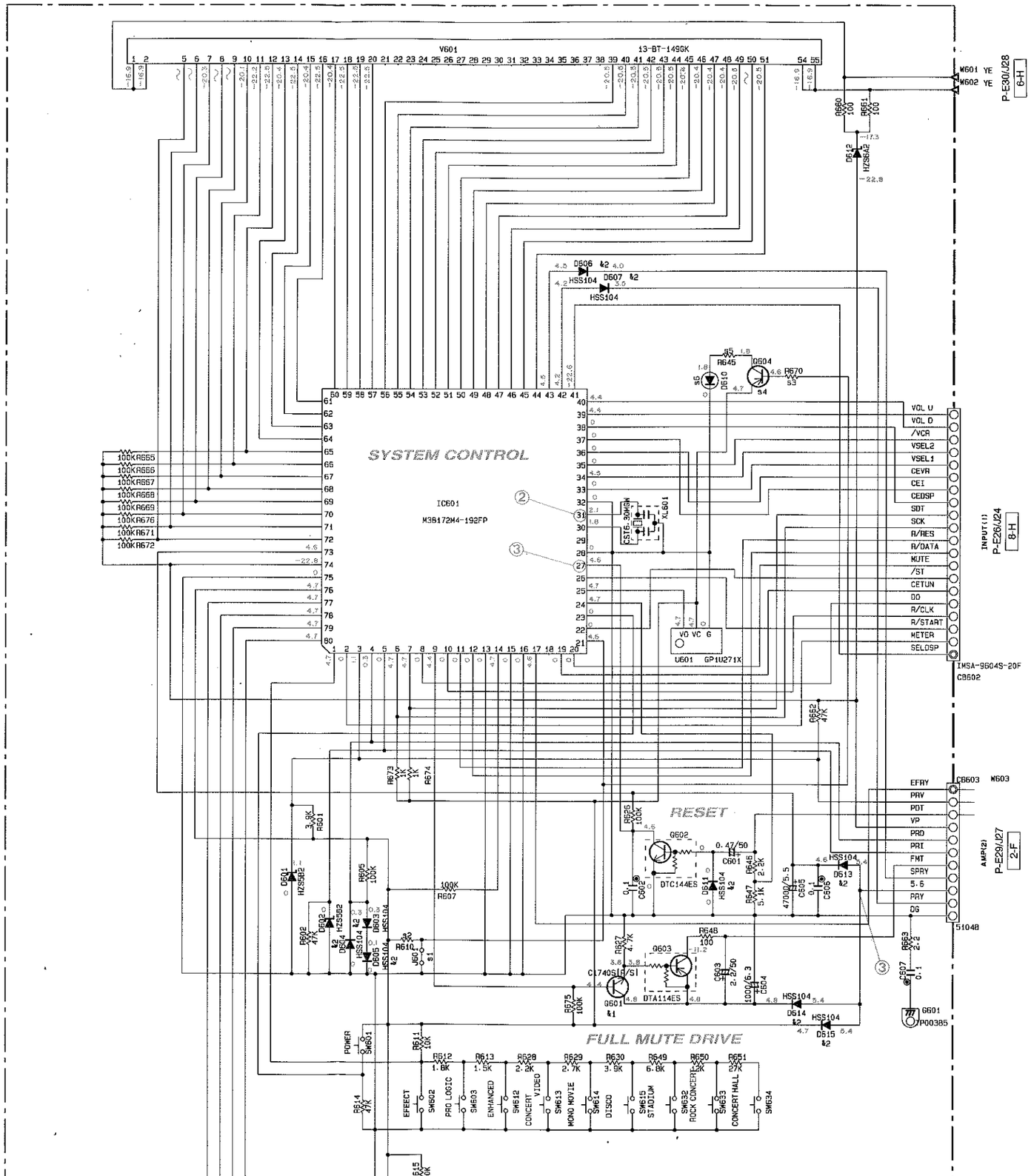

● V601 : 13-BT-14

● PIN CONNECTION

Pin No.	55
Connection	F2

Pin No.	36
Connection	P16

Pin No.	17
Connection	P13

Note 1) F1, F2 ..... Fila
2) NP ..... No

● GRID ASSIGMENT

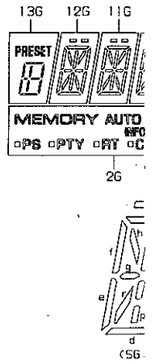

● ANODE CONNEC

	13G
P1	a
P2	b,c
P3	d
P4	e,f
P5	g
P6	j,p
P7	m
P8	PRESET
P9	STEREO
P10	B1
P11	B2
P12	B3
P13	B4
P14	B5
P15	S1
P16	SLEEP

(R)····· GENERAL
(A)····· AUSTRALIAN
(B)····· BRITISH
(G)····· EUROPEAN
(T)····· CHINA
(L)····· SINGAPORE

		J	R	B·G
S1	J601	O	X	X
S2	R610	X	100K	100K
S3	R670	X	10K	10K
S4	Q604	X	A933S[Q/R] A1115[E/F] A1309A[Q/R/S]	A933S[Q/R] A1115[E/F] A1309A[Q/R/S]
S5	R645	X	470	470
S6	D610	X	SLR-325VC	SLR-325VC
S7				
S8				
S9				

Interchangeable Parts at Manufacture-Stage

Mark	Reference Parts Number	Parts Name
‡1	Q601	2SC1740S[R/S] 2SC2603[E/F] 2SC3311A[Q/R/S]
‡2	D603-607, 611, 613-615	HSS104 1SS133 1SS176

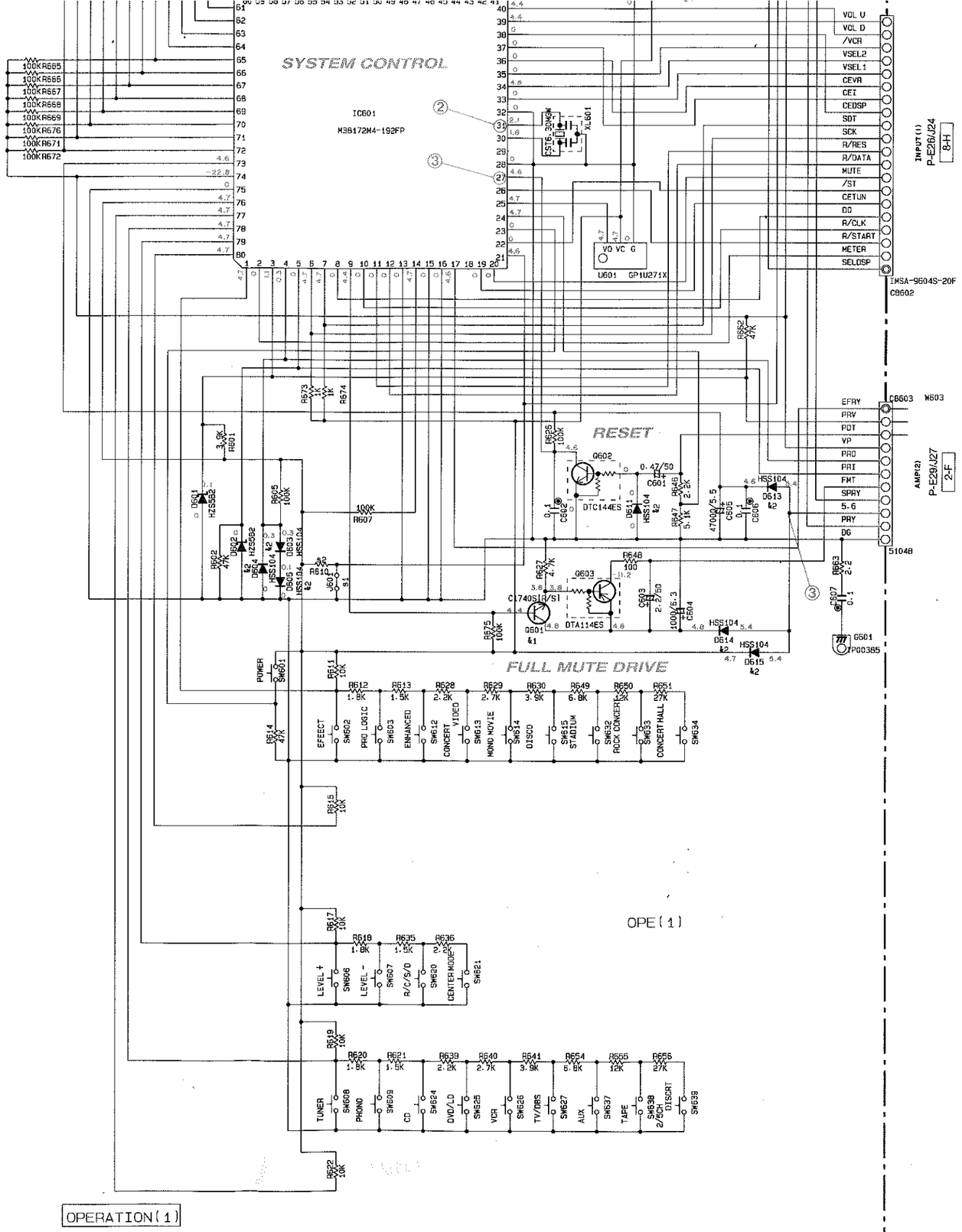

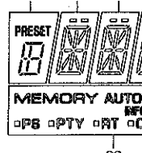

● ANODE CONNEC

	13G
P1	a
P2	b,c
P3	d
P4	e,f
P5	g
P6	j,p
P7	m
P8	PRESET
P9	STEREO
P10	B1
P11	B2
P12	B3
P13	B4
P14	B5
P15	S1
P16	SLEEP

Point ② (Pin31 of IC601)
V : 2V/div H : 0.1 µse
DC range 1 : 1 probe

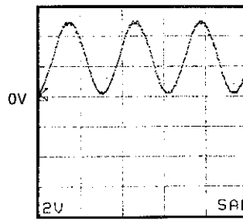

* *All voltage are measured with a 10MΩ/V DC elec*
* *Components having special characteristics are i replaced with parts having specifications equal to*
* *Schematic diagram is subject to change without*

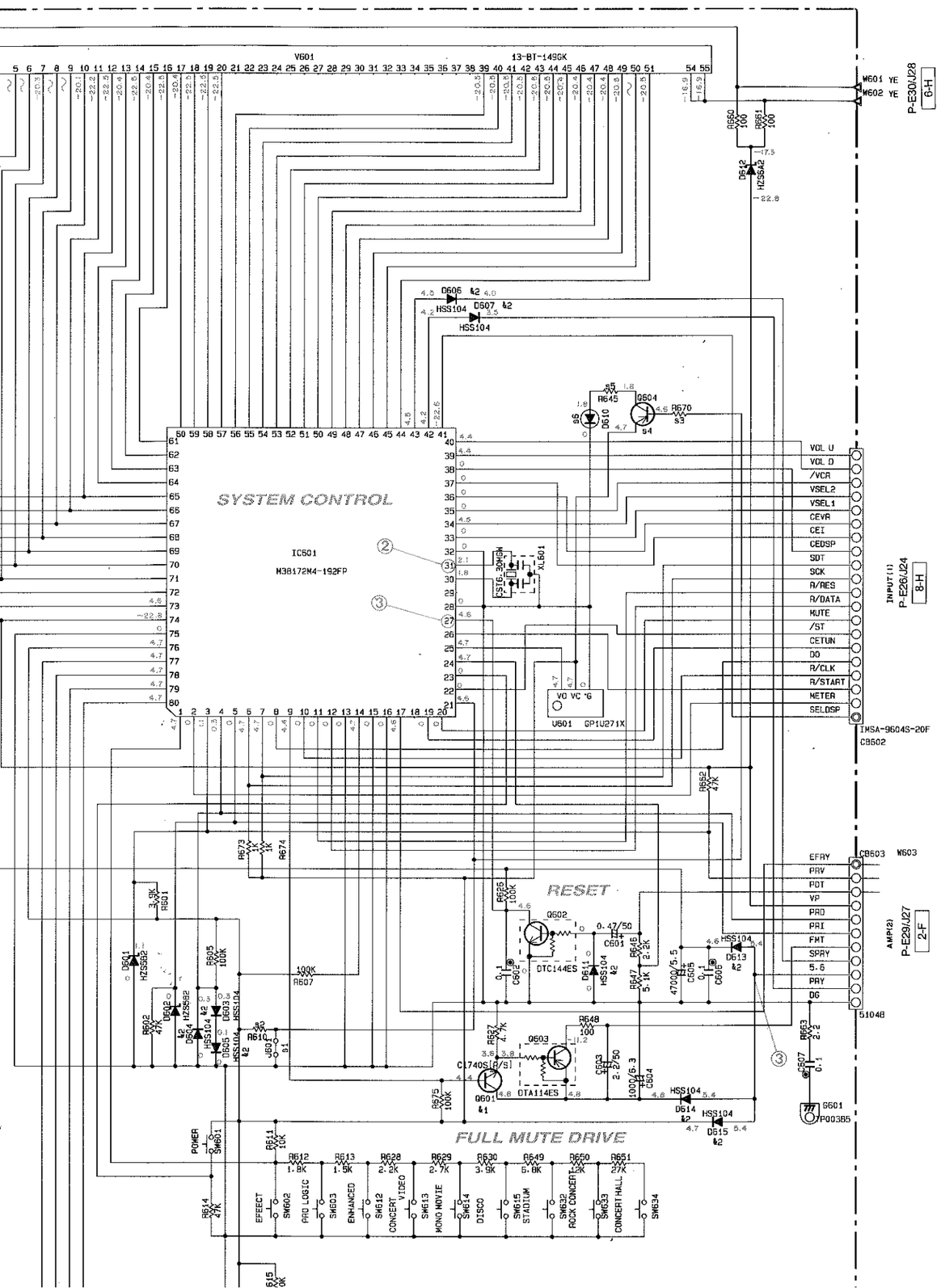

● V601 : 13-BT-149 (VV485500)

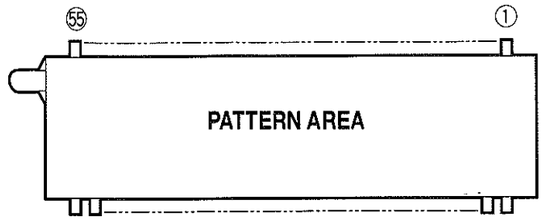

● PIN CONNECTION

Pin No.	55	54	53	52	51	50	49	48	47	46	45	44	43	42	41	40	39	38	37
Connection	F2	F2	NP	NP	1G	2G	3G	4G	5G	6G	7G	8G	9G	10G	11G	12G	13G	NC	NC

Pin No.	36	35	34	33	32	31	30	29	28	27	26	25	24	23	22	21	20	29	18
Connection	P16	NC	NC	NC	NC	NC	NC	NC	NC	NC	NC	NC	NC	NC	NC	NC	P16	P15	P14

Pin No.	17	16	15	14	13	12	11	10	9	8	7	6	5	4	3	2	1
Connection	P13	P12	P11	P10	P9	P8	P7	P6	P5	P4	P3	P2	P1	NP	NP	F1	F1

Note 1) F1, F2 ..... Filament
2) NP ..... No Pin
3) NC ..... No Connection
4) P1~P16 ..... Datum Line
5) 1G~13G ..... Grid

● GRID ASSIGMENT

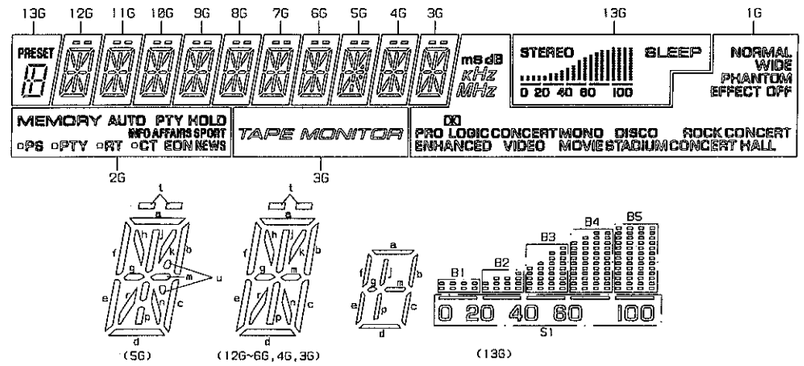

● ANODE CONNECTION

	13G	12G~6G	5G	4G	3G	2G	1G
P1	a	a	a	a	a	MEMORY	NORMAL
P2	b,c	b	b	b	b	AUTO	WIDE
P3	d	c	c	c	c	PTY HOLD	PHANTOM
P4	e,f	d	d	d	d	SPORT	EFFECT OFF
P5	g	e	e	e	e	AFFAIRS	ROCK CONCERT
P6	j,p	f	f	f	f	INFO	CONCERT HALL
P7	m	g	g	g	g	NEWS	DISCO
P8	PRESET	h	h	h	h	EON	STADIUM
P9	STEREO	j	j	j	j	CT	MONO MOVIE
P10	B1	k	k	k	k	□ (CT)	CONCERT VIDEO
P11	B2	m	m	m	m	RT	DD PRO LOGIC
P12	B3	n	n	n	n	□ (RT)	ENHANCED
P13	B4	p	p	p	p	PTY	dB
P14	B5	r	r	r	r	□ (PTY)	mS
P15	S1	t	t	t	t	PS	kHz
P16	SLEEP	-	u	-	TAPE MONITOR	□ (PS)	MHz

Point ③

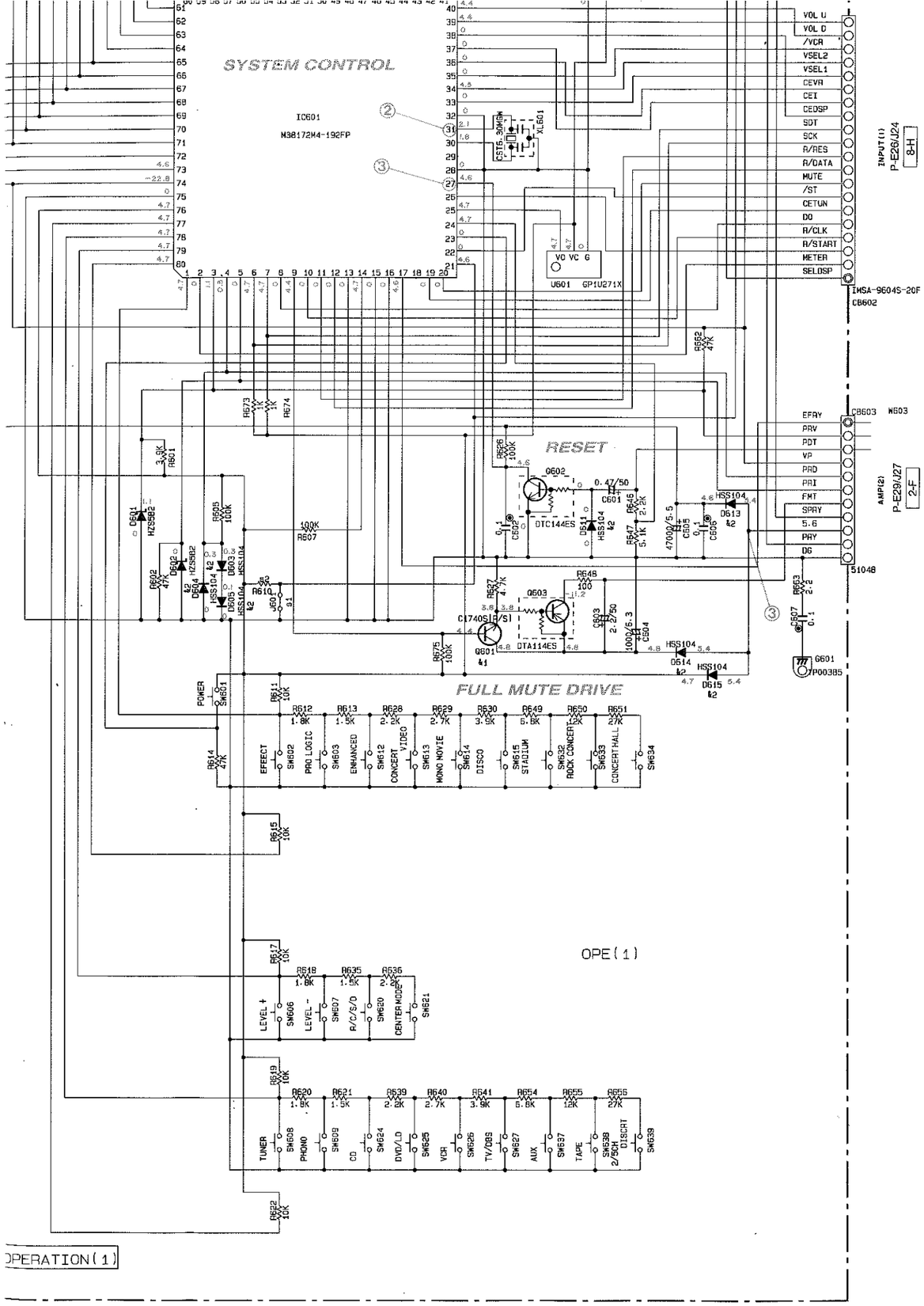

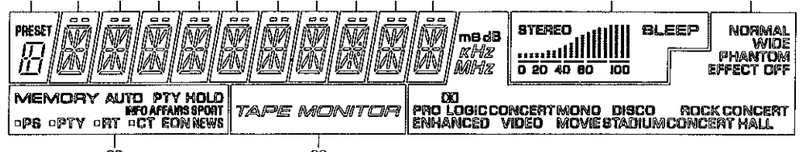

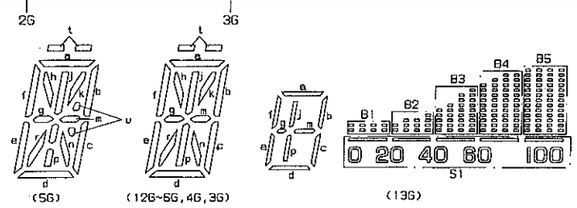

● ANODE CONNECTION

	13G	12G~6G	5G	4G	3G	2G	1G
P1	a	a	a	a	a	MEMORY	NORMAL
P2	b,c	b	b	b	b	AUTO	WIDE
P3	d	c	c	c	c	PTY HOLD	PHANTOM
P4	e,f	d	d	d	d	SPORT	EFFECT OFF
P5	g	e	e	e	e	AFFAIRS	ROCK CONCERT
P6	j,p	f	f	f	f	INFO	CONCERT HALL
P7	m	g	g	g	g	NEWS	DISCO
P8	PRESET	h	h	h	h	EON	STADIUM
P9	STEREO	j	j	j	j	CT	MONO MOVIE
P10	B1	k	k	k	k	□ (CT)	CONCERT VIDEO
P11	B2	m	m	m	m	RT	DX PRO LOGIC
P12	B3	n	n	n	n	□ (RT)	ENHANCED
P13	B4	p	p	p	p	PTY	dB
P14	B5	r	r	r	r	□ (PTY)	mS
P15	S1	t	t	t	t	PS	kHz
P16	SLEEP	–	u	–	TAPE MONITOR	□ (PS)	MHz

Point ② (Pin31 of IC601)
V : 2V/div H : 0.1 μsec/div
DC range 1 : 1 probe

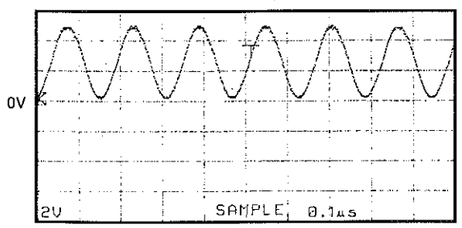

Point ③

CH1 : Anode of D613 V : 2V/div (CH1)
CH2 : Pin27 of IC601 V : 2V/div (CH2)

H : 0.5 sec/div DC range 1 : 1 probe

(This waveform is not available by pushing the power switch ON and OFF.)

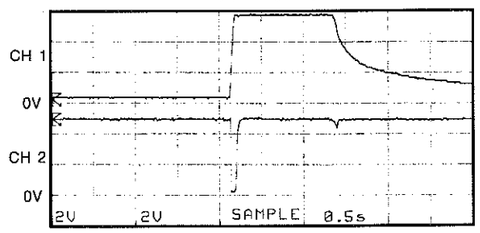

With the POWER ON, disconnect the A/C power cord. Reconnect the A/C power cord and the above waveforms will start.

Disconnect the power cord from the AC outlet.

* *All voltage are measured with a 10MΩ/V DC electric volt meter.*
* *Components having special characteristics are marked ⚠ and must be replaced with parts having specifications equal to those originally installed.*
* *Schematic diagram is subject to change without notice.*

● 電圧は、内部抵抗10MΩの電圧計で測定したものです。
● ⚠印のある部品は、安全性確保部品を示しています。部品の交換が必要な場合、パーツリストに記載されている部品を使用してください。
● 本回路図は標準回路図です。改良のため予告なく変更することがございます。

■ SCHEMATIC DIAGRAM (OPERATION) /総回路図

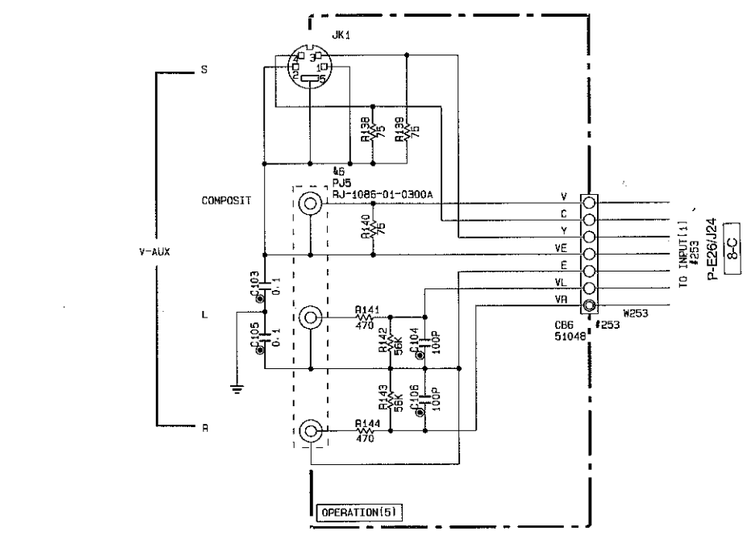

IC22, 23, 901 : μPC4570HA
Dual OP-Amp

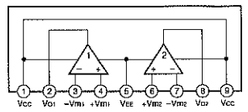

IC251 : LC78213
Analog Function Switch

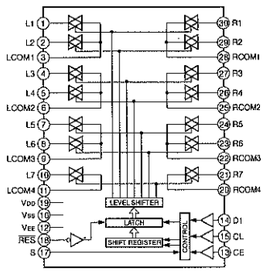

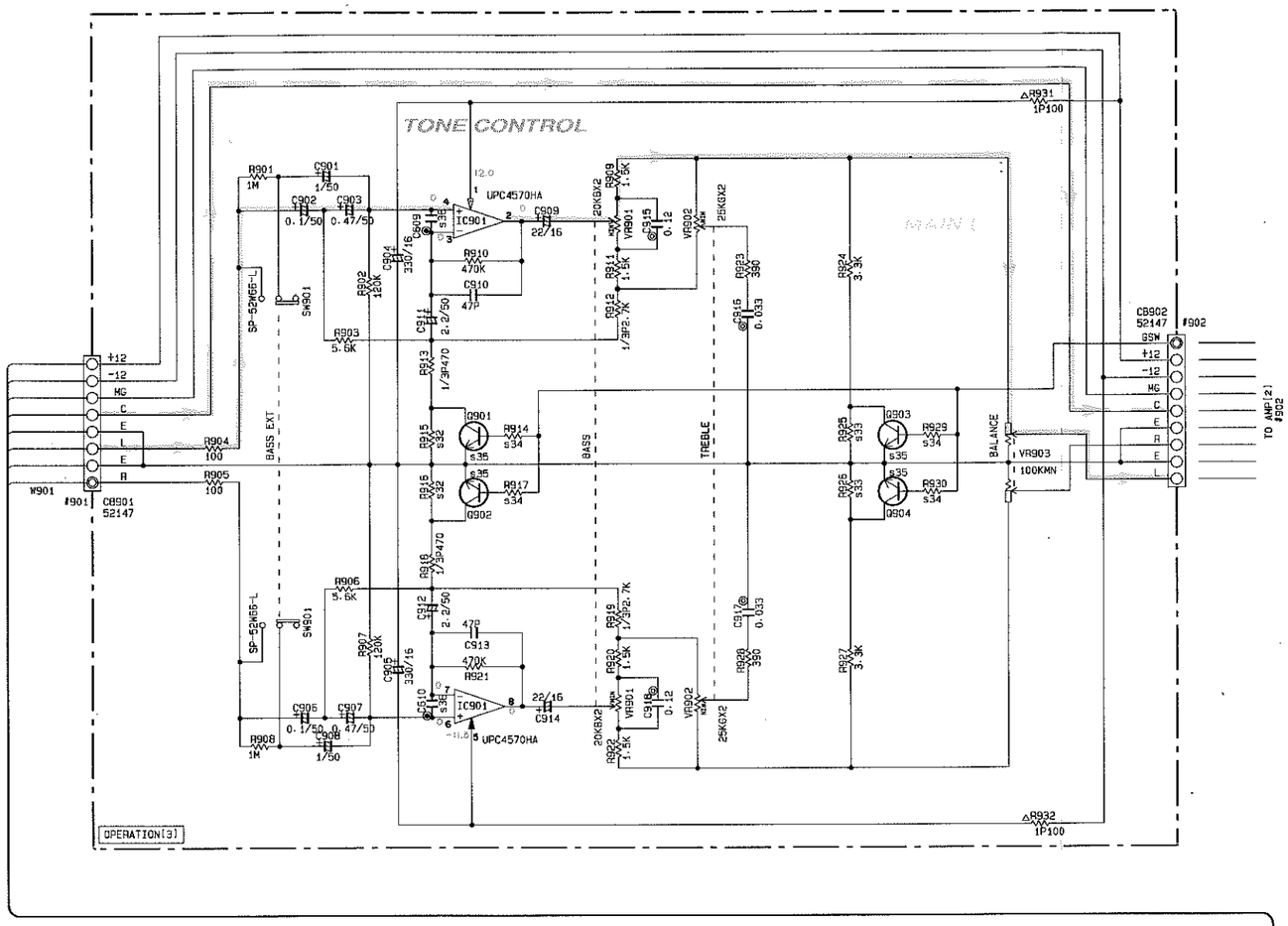

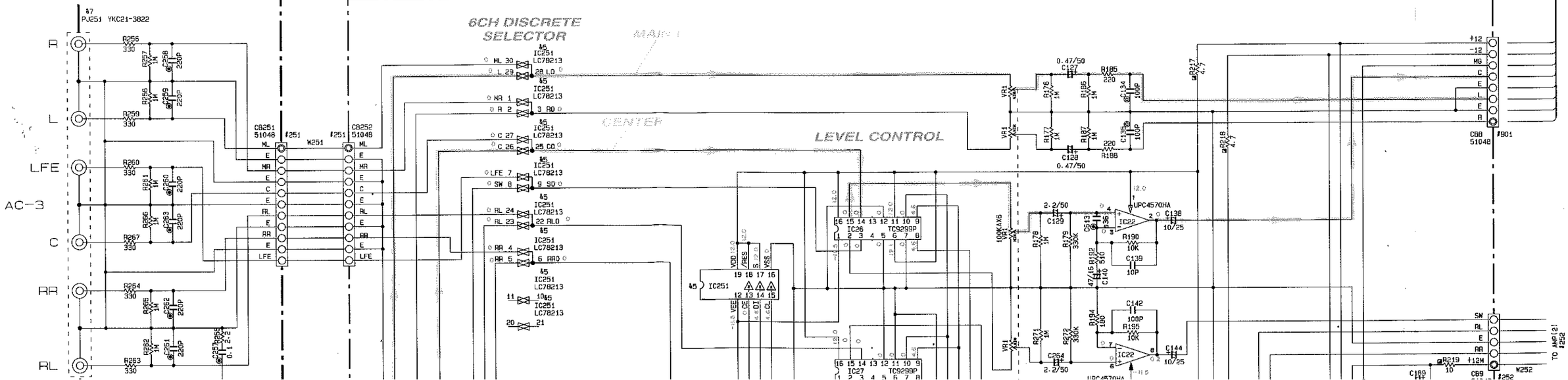

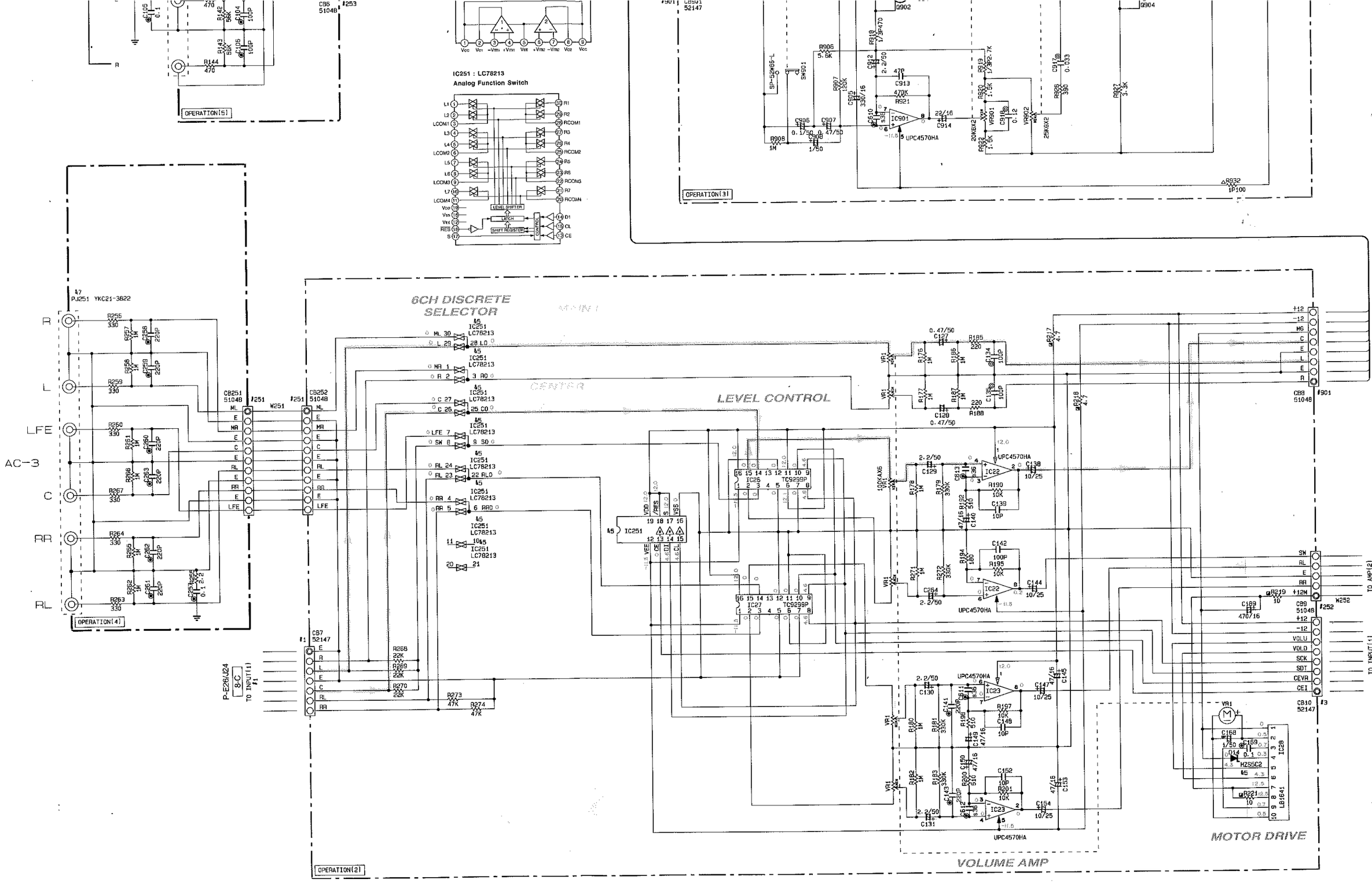

* All voltage are measured with a 10MΩ/V DC electric volt
* Components having special characteristics are marked
replaced with parts having specifications equal to those o
* Schematic diagram is subject to change without notice.

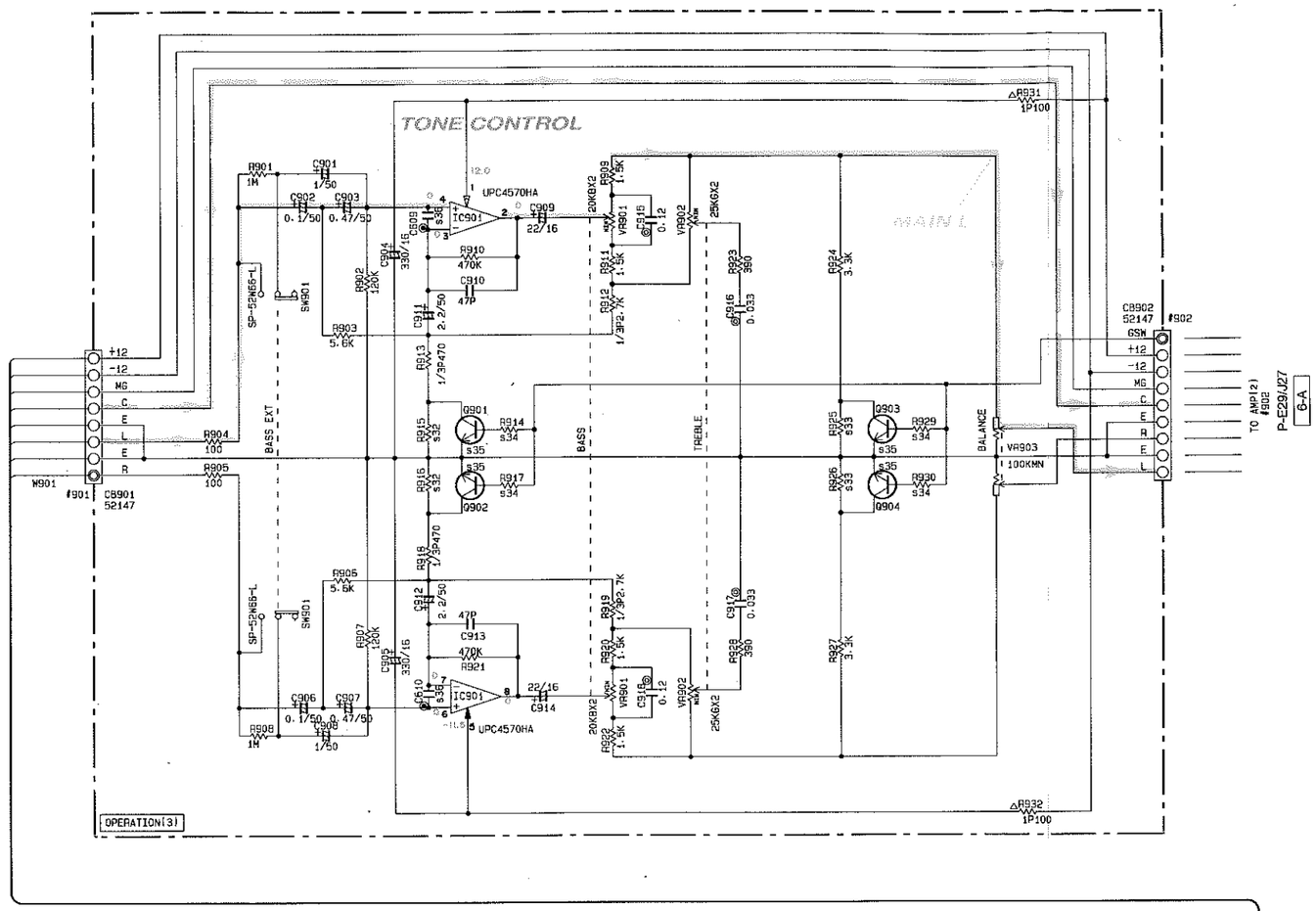

IC22, 23, 901 : μPC4570HA
Dual OP-Amp

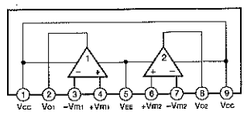

IC251 : LC78213
Analog Function Switch

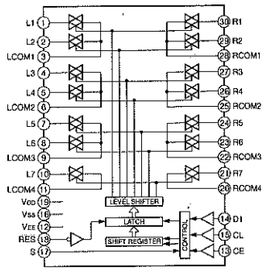

CAPACITOR

REMARKS	PARTS NAME	
NO MARK	ELECTROLYTIC CAPACITOR	‖
⊗	TANTALUM CAPACITOR	
NO MARK	CERAMIC CAPACITOR	‖
◉	CERAMIC TUBULAR CAPACITOR	
◎	POLYESTER FILM CAPACITOR	
○	POLYSTYRENE FILM CAPACITOR	
Ⓓ	MICA CAPACITOR	
Ⓟ	POLYPROPYLENE FILM CAPACITOR	
⊕	SEMICONDUCTIVE CERAMIC CAPACITOR	

RESISTOR

REMARKS	PARTS NAME
NO MARK	CARBON FILM RESISTOR (P=5)
⧄	CARBON FILM RESISTOR (P=10)
△	METAL OXIDE FILM RESISTOR
▲	METAL FILM RESISTOR
⊠	METAL PLATE RESISTOR
◪	FIRE PROOF CARBON FILM RESISTOR
□	CEMENT MOLDED RESISTOR
⊘	SEMI VARIABLE RESISTOR
▬	CHIP RESISTOR

Interchangeable Parts at Manufacture-Stage

Mark	Reference Parts Number	Parts Name
45	IC251	LC78213 LC7823N
46	PJ5	HSP-253V-06 RJ-1086-01-0300
47	PJ251	YKC21-3822 RJ-1074-25-0353A

	MODEL No.	RX-V592/ROSML		
S	Circuit No.	JA		B.G
31				
32	R915.916	1		1.8K
33	R925.926	1		2.2K
34	R914.917. 929.930	×		10K
35	Q901-904	×		D1915F(S/T)
36	C609-613	×		100P

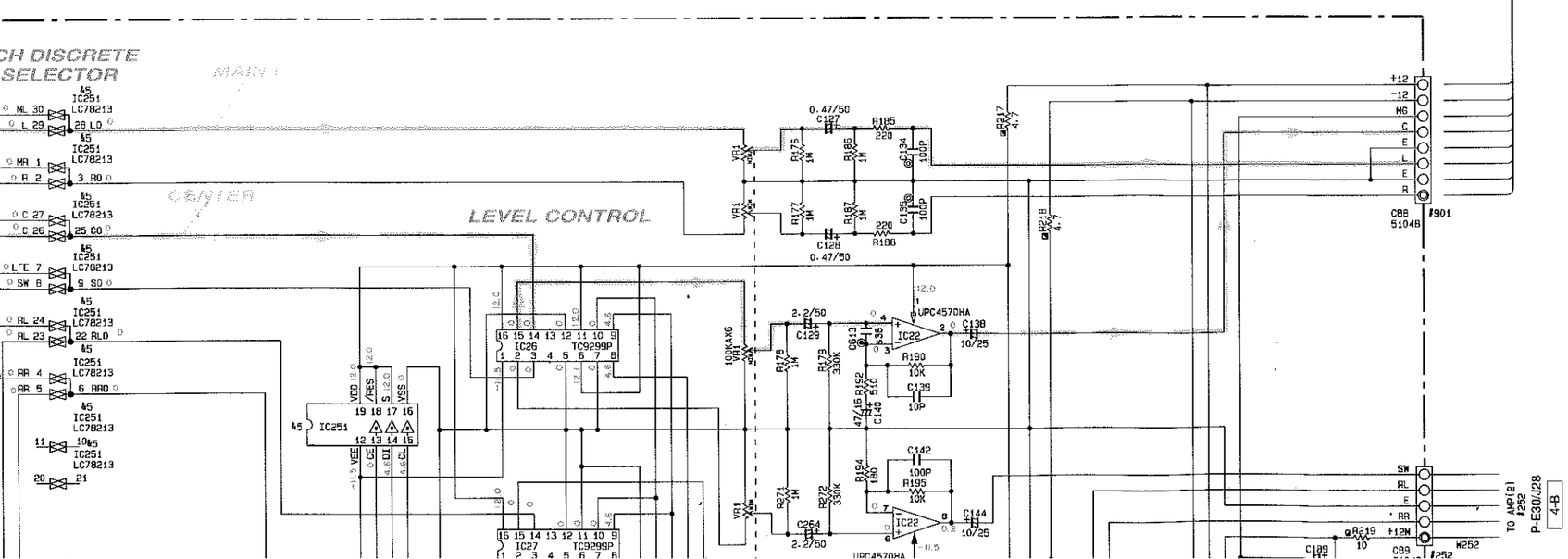

IC26, 27 : TC9299P
Electric Controlled Volume

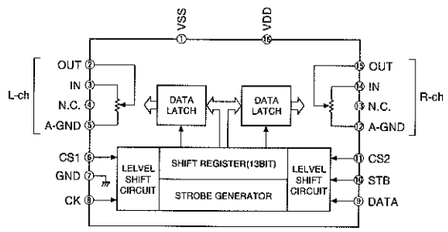

IC28 : LB1641
Motor Driver

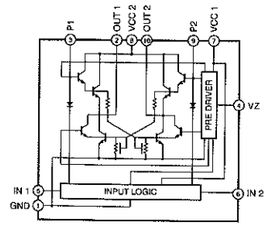

Other ICs
● IC801: M38177ECHFP → See page E-9/J-7

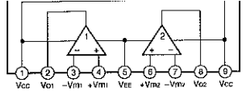

IC251 : LC78213
Analog Function Switch

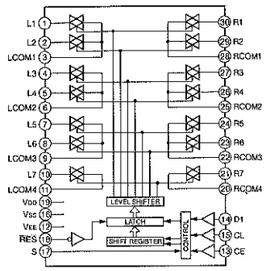

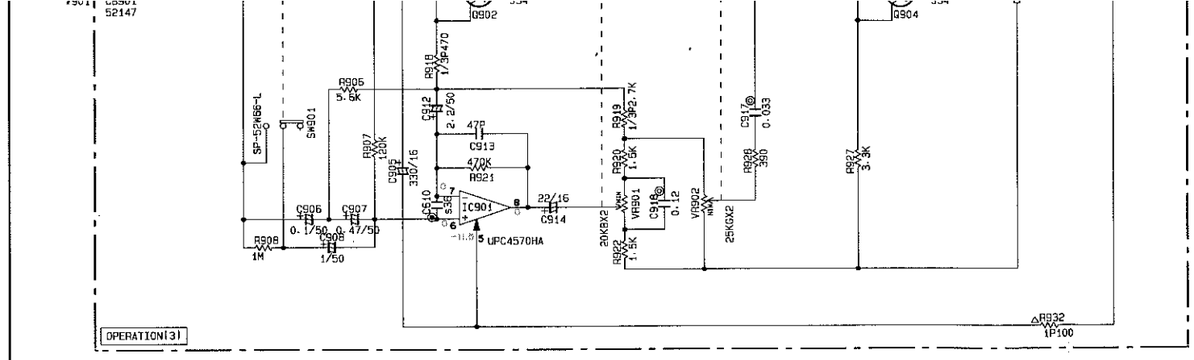

Mark	Reference Parts Number	Parts Name
45	IC251	LC78213 LC7823N
46	PJ5	HSP-253V-06 AJ-1086-01-0300
47	PJ251	YKC21-3822 AJ-1074-25-0353A

MODEL No.		AX-V592/RDSML		
S	Circuit No.	JA		B.G
31				
32	R915, 916	1		1.8K
33	R925, 926	1		2.2K
34	R914, 917, 929, 930	×		10K
35	Q901~904	×		D1915F(S/T)
36	C609~613	×		100P

IC26, 27 : TC9299P
Electric Controlled Volume

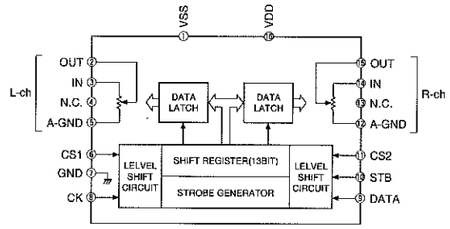

IC28 : LB1641
Motor Driver

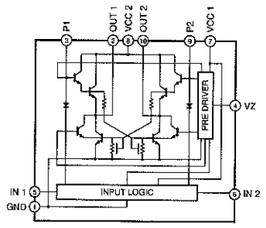

Other ICs
● IC601: M38177ECHFP → See page E-9/J-7

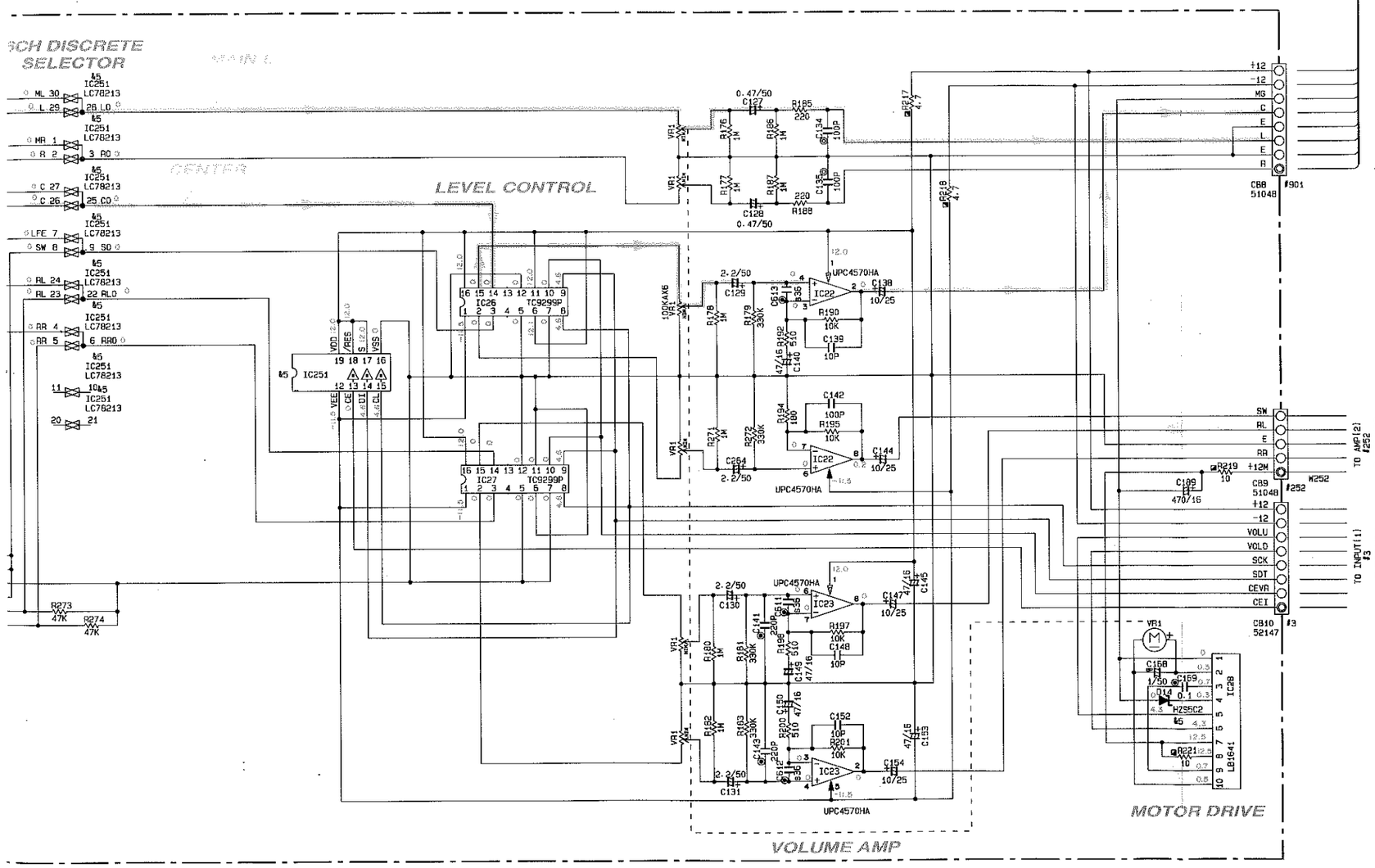

* *All voltage are measured with a 10MΩ/V DC electric volt meter.*
* *Components having special characteristics are marked ⚠ and must be replaced with parts having specifications equal to those originally installed.*
* *Schematic diagram is subject to change without notice.*

● 電圧は、内部抵抗10MΩの電圧計で測定したものです。
● ⚠印のある部品は、安全性確保部品を示しています。部品の交換が必要な場合、パーツリストに記載されている部品を使用してください。
● 本回路図は標準回路図です。改良のため予告なく変更することがございます。

SCHEMATIC DIAGRAM (AMP) /総回路図

RESISTOR

REMARKS	PARTS NAME
NO MARK	CARBON FILM RESISTOR [P=5]
◪	CARBON FILM RESISTOR [P=10]
△	METAL OXIDE FILM RESISTOR
▲	METAL FILM RESISTOR
⊠	METAL PLATE RESISTOR
◪	FIRE PROOF CARBON FILM RESISTOR
□	CEMENT MOLDED RESISTOR
⊘	SEMI VARIABLE RESISTOR
■	CHIP RESISTOR

CAPACITOR

REMARKS	PARTS NAME	
NO MARK	ELECTROLYTIC CAPACITOR	#
⊗	TANTALUM CAPACITOR	
NO MARK	CERAMIC CAPACITOR	
◉	CERAMIC TUBULAR CAPACITOR	
◎	POLYESTER FILM CAPACITOR	
○	POLYSTYRENE FILM CAPACITOR	
Ⓣ	MICA CAPACITOR	
Ⓟ	POLYPROPYLENE FILM CAPACITOR	
●	SEMICONDUCTIVE CERAMIC CAPACITOR	

NOTICE (model)
(J)····· JAPANESE
(U)····· U.S.A
(C)····· CANADIAN
(R)····· GENERAL
(A)····· AUSTRALIAN
(B)····· BRITISH
(G)····· EUROPEAN
(T)····· CHINA
(L)····· SINGAPORE

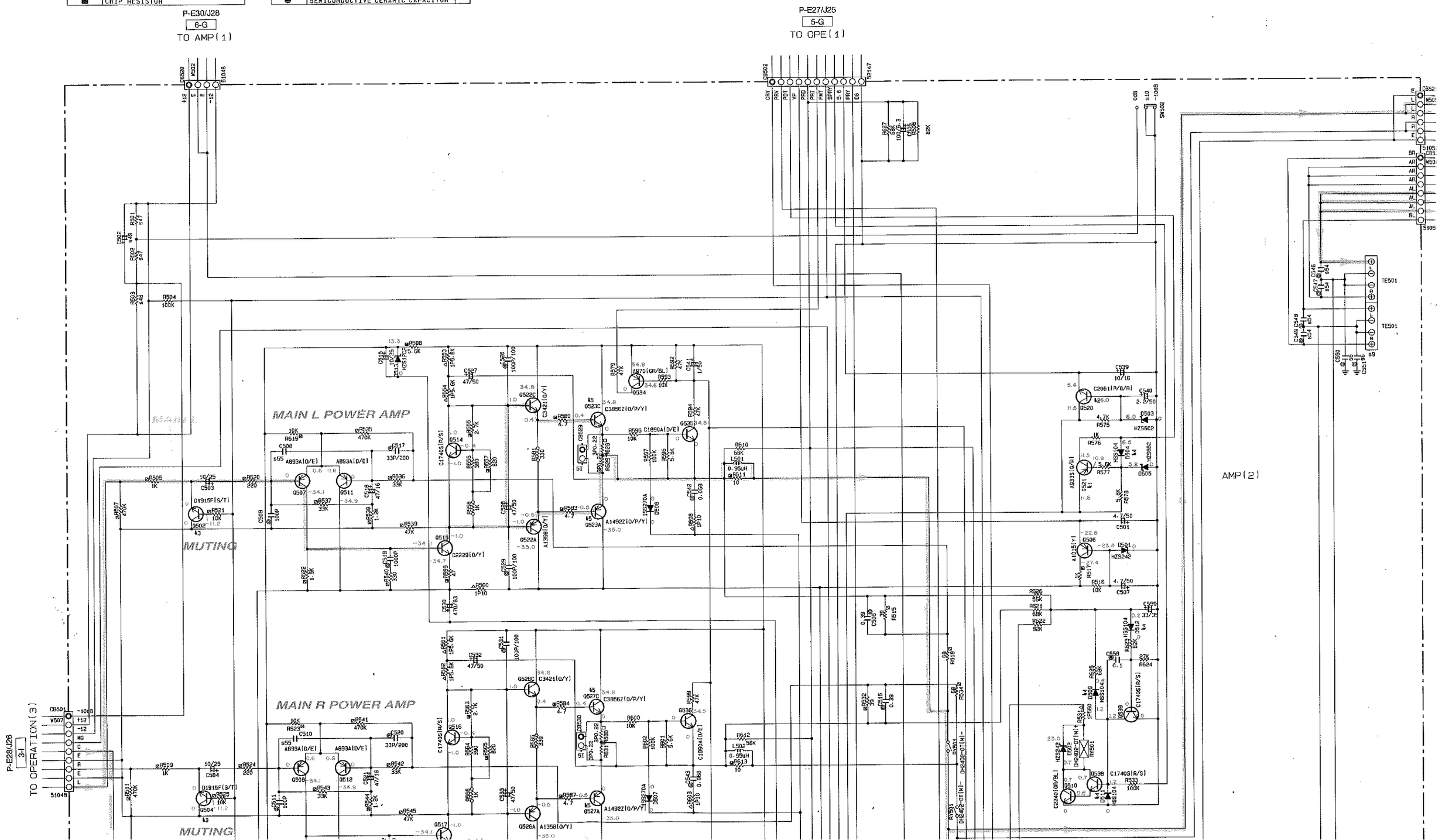

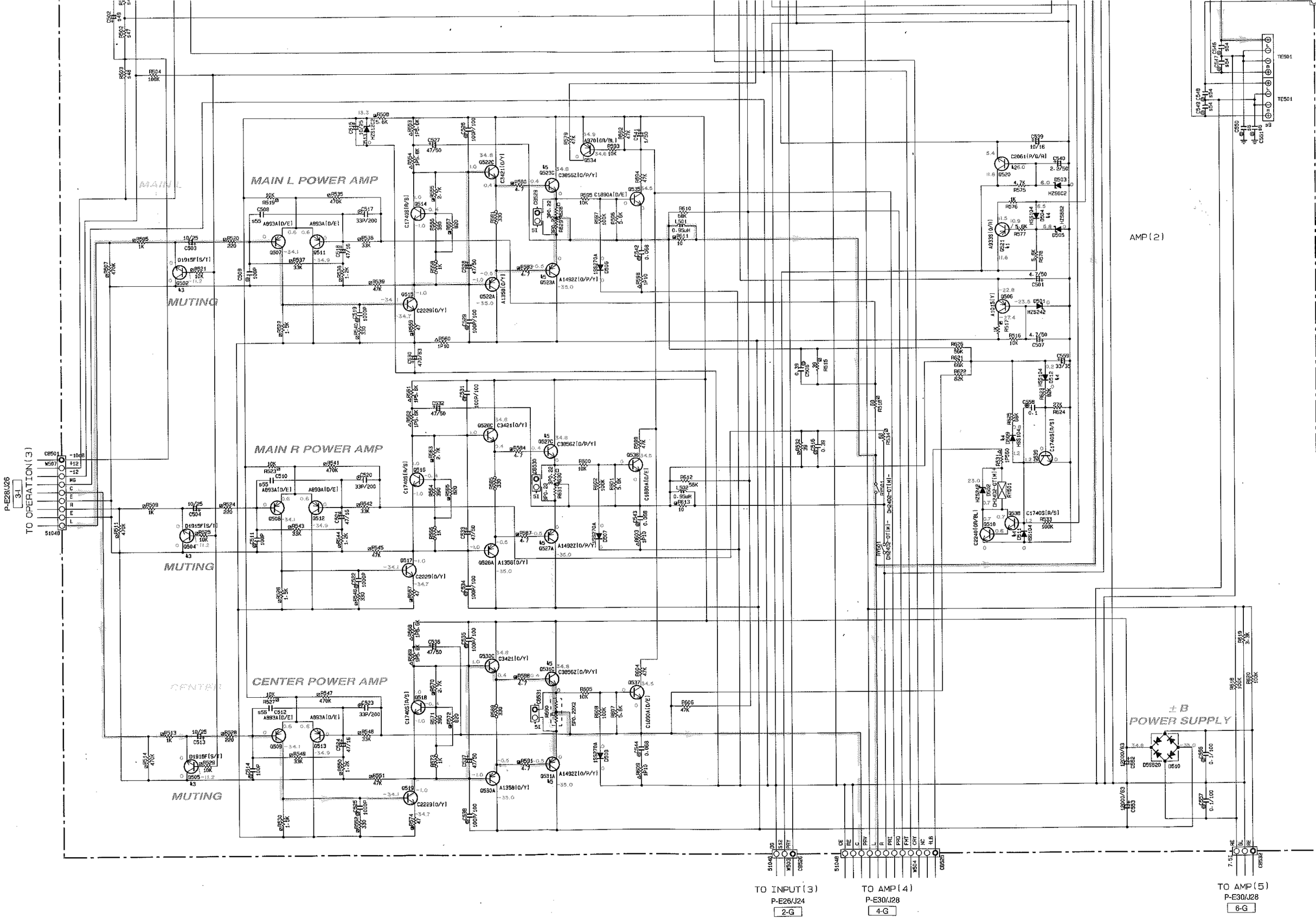
MAIN L POWER AMP
MAIN R POWER AMP
CENTER POWER AMP
MUTING
MUTING
MUTING
±B POWER SUPPLY
AMP(2)
TO OPERATION(3)
P-E28/J26
3-I
TO INPUT(3)
P-E26/J24
2-G
TO AMP(4)
P-E30/J28
4-G
TO AMP(5)
P-E30/J28
6-G

NOTICE (model)
(J)····· JAPANESE
(U)····· U.S.A
(C)····· CANADIAN
(R)····· GENERAL
(A)····· AUSTRALIAN
(B)····· BRITISH
(G)····· EUROPEAN
(T)····· CHINA
(L)····· SINGAPORE

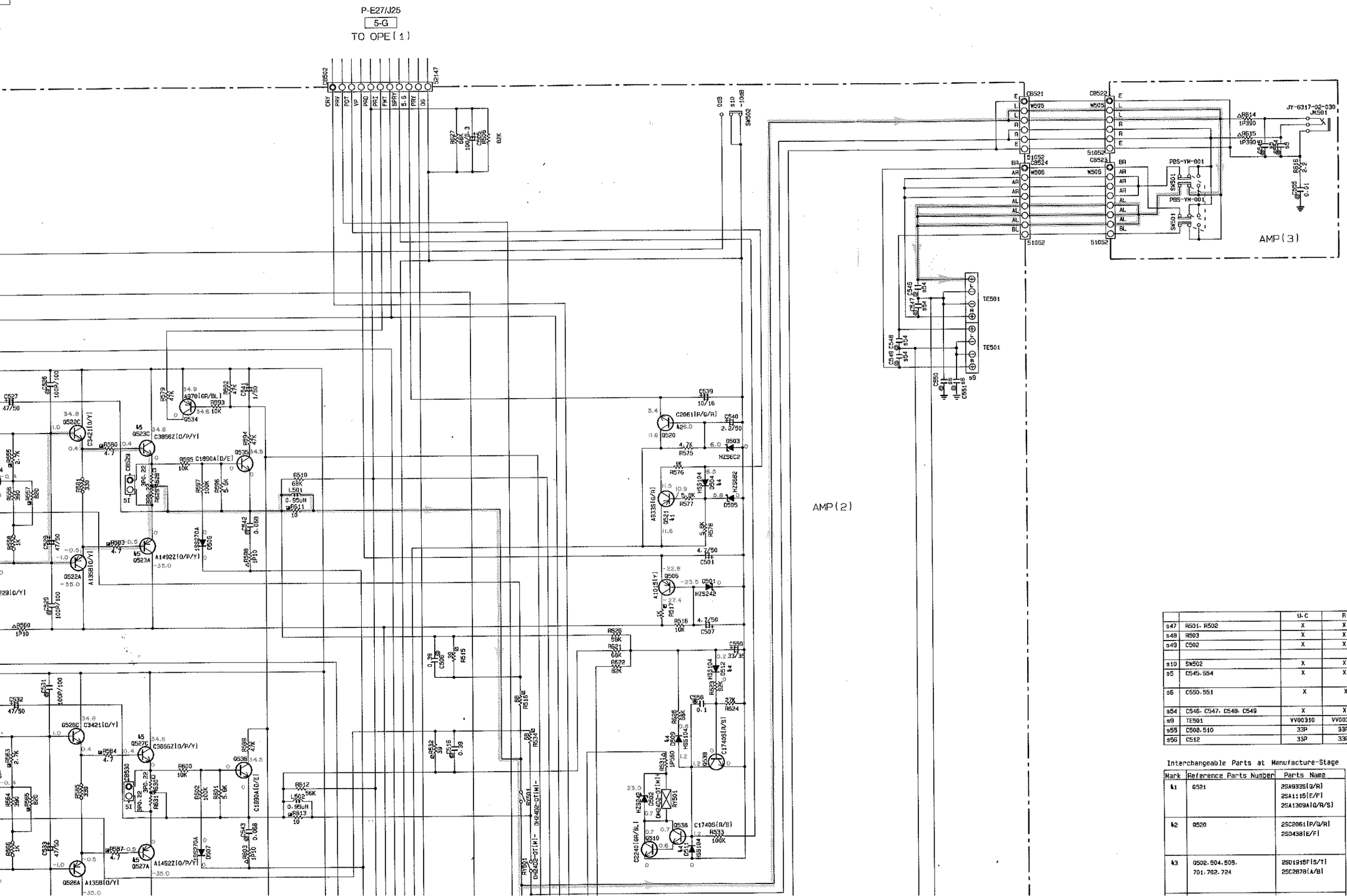

		U.C	R	A	B.G	L
s47	R501, R502	X	X	X	4.7K	X
s48	R503	X	X	X	15K	X
s49	C502	X	X	X	1/50	X
s10	SW502	X	X	X	VS60260	X
s5	C545, 554	X	X	0.01 UA95410	0.01 UA95410	0.01 UA95410
s6	C550, 551	X	X	0.01 VI71670	0.01 VI71670	0.01 VI71670
s54	C546, C547, C548, C549	X	X	0.022	0.022	0.022
s9	TE501	VV00310	VV00310	VV00310	VU81970	VU81970
s55	C508, 510	33P	33P	220P	220P	220P
s56	C512	33P	33P	100P	100P	100P

Interchangeable Parts at Manufacture-Stage

Mark	Reference Parts Number	Parts Name
&1	Q521	2SA933S(Q/R) 2SA1115(E/F) 2SA1309A(Q/R/S)
&2	Q520	2SC2061(P/Q/R) 2SD438(E/F)
&3	Q502, 504, 505, 701, 702, 724	2SD1916(S/T) 2SC2878(A/B)

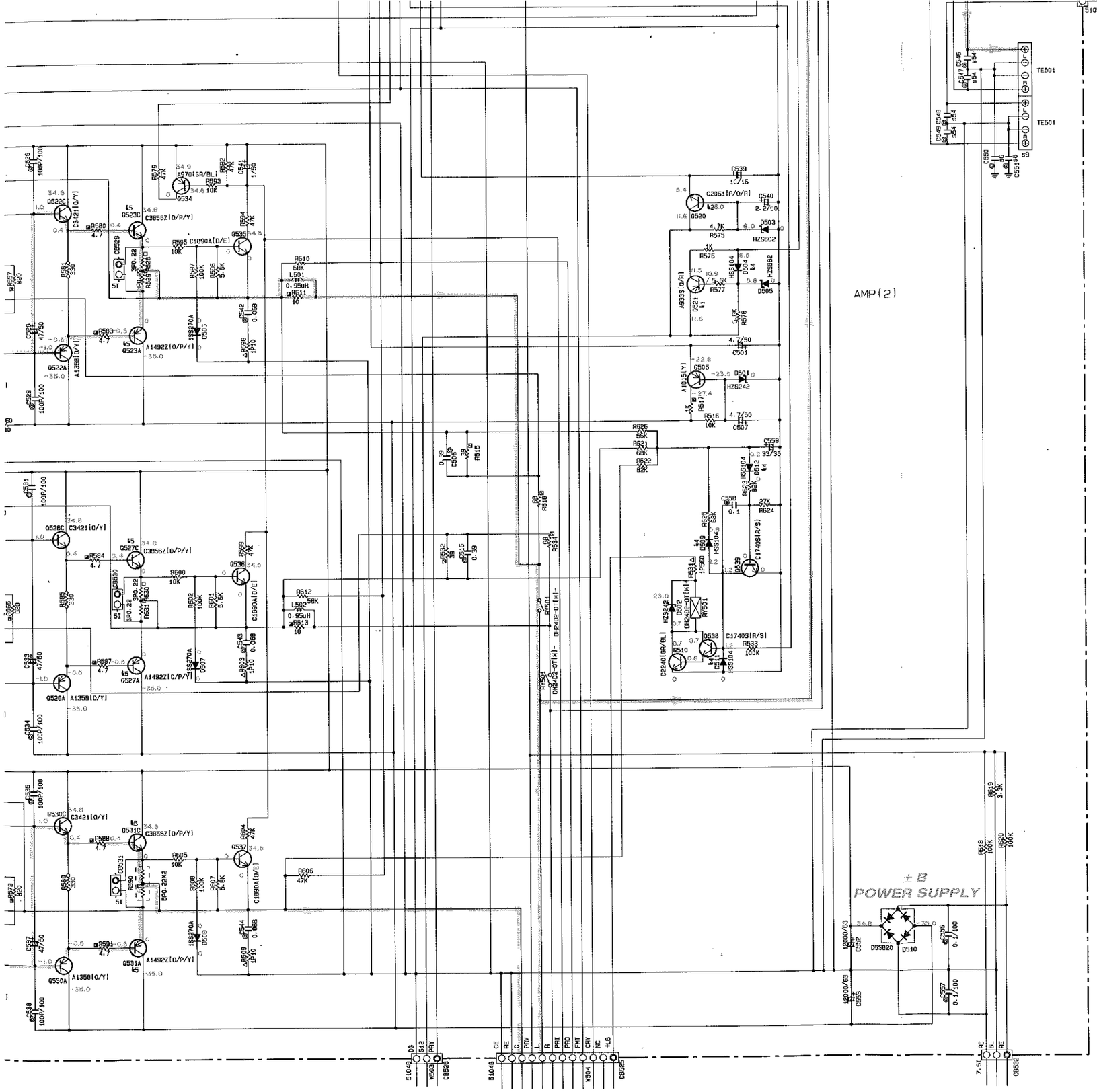

		U.C	R	A	B.G	L
s47	R501, R502	X	X	X	4.7K	X
s48	R503	X	X	X	15K	X
s49	C502	X	X	X	1/50	X
s10	SW502	X	X	X	VS60260	X
s5	C545, C54	X	X	0.01 UA95410	0.01 UA95410	0.01 UA95410
s6	C550, 551	X	X	0.01 VI71670	0.01 VI71670	0.01 VI71670
s54	C546, C547, C548, C549	X	X	0.022	0.022	0.022
s9	TE501	VV00310	VV00310	VV00310	VU81970	VU81970
s55	C508, 510	33P	33P	220P	220P	220P
s56	C512	33P	33P	100P	100P	100P

Interchangeable Parts at Manufacture-Stage

Mark	Reference Parts Number	Parts Name
k1	Q521	2SA933S(Q/R) 2SA1115(E/F) 2SA1309A(Q/R/S)
k2	Q520	2SC2051(P/Q/R) 2SD438(E/F)
k3	Q502, 504, 505, 701, 702, 724	2SD1915F(S/T) 2SC2878(A/B)
k4	D504, 509, 511, 512	HS104 1SS133 1SS176
k5	Q523A, C, 527A, C, Q531A, C	2SA1492Z(O/P/Y) 2SC3856Z(O/P/Y)
		2SA1962(R/O) 2SC5242(R/O)
k6	PJ701	YKC21-3545 RJ-1074-25-0300A

* *All voltage are measured with a 10MΩ/V DC electric volt meter.*
* *Components having special characteristics are marked ⚠ and must be replaced with parts having specifications equal to those originally installed.*
* *Schematic diagram is subject to change without notice.*

● 電圧は、内部抵抗10MΩの電圧計で測定したものです。
● ⚠印のある部品は、安全性確保部品を示しています。部品の交換が必要な場合、パーツリストに記載されている部品を使用してください。
● 本回路図は標準回路図です。改良のため予告なく変更することがございます。

■ SCHEMATIC DIAGRAM (AMP) /総回路図

RESISTOR

REMARKS	PARTS NAME
NO MARK	CARBON FILM RESISTOR (P=5)
◪	CARBON FILM RESISTOR (P=10)
△	METAL OXIDE FILM RESISTOR
◭	METAL FILM RESISTOR
⊠	METAL PLATE RESISTOR
◪	FIRE PROOF CARBON FILM RESISTOR
□	CEMENT MOLDED RESISTOR
⊘	SEMI VARIABLE RESISTOR
▣	CHIP RESISTOR

CAPACITOR

REMARKS	PARTS NAME	
NO MARK	ELECTROLYTIC CAPACITOR	‖
⊗	TANTALUM CAPACITOR	‖
NO MARK	CERAMIC CAPACITOR	‖
◉	CERAMIC TUBULAR CAPACITOR	‖
◎	POLYESTER FILM CAPACITOR	‖
○	POLYSTYRENE FILM CAPACITOR	‖
Ⓘ	MICA CAPACITOR	‖
Ⓟ	POLYPROPYLENE FILM CAPACITOR	‖
⊕	SEMICONDUCTIVE CERAMIC CAPACITOR	‖

NOTICE (model)
(J)····· JAPANESE
(U)····· U. S. A
(C)····· CANADIAN
(R)····· GENERAL
(A)····· AUSTRALIAN
(B)····· BRITISH
(G)····· EUROPEAN
(T)····· CHINA
(L)····· SINGAPORE

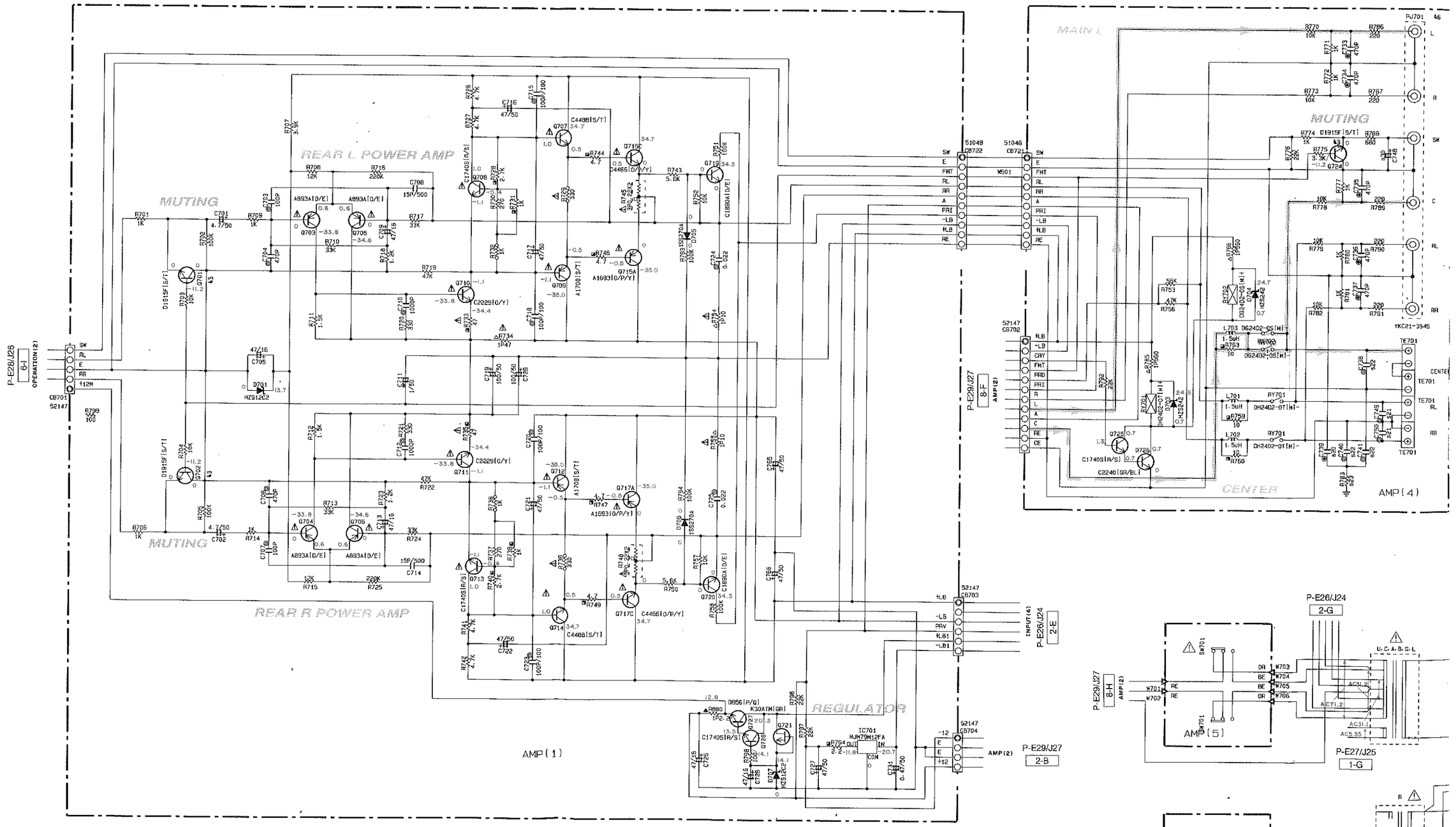

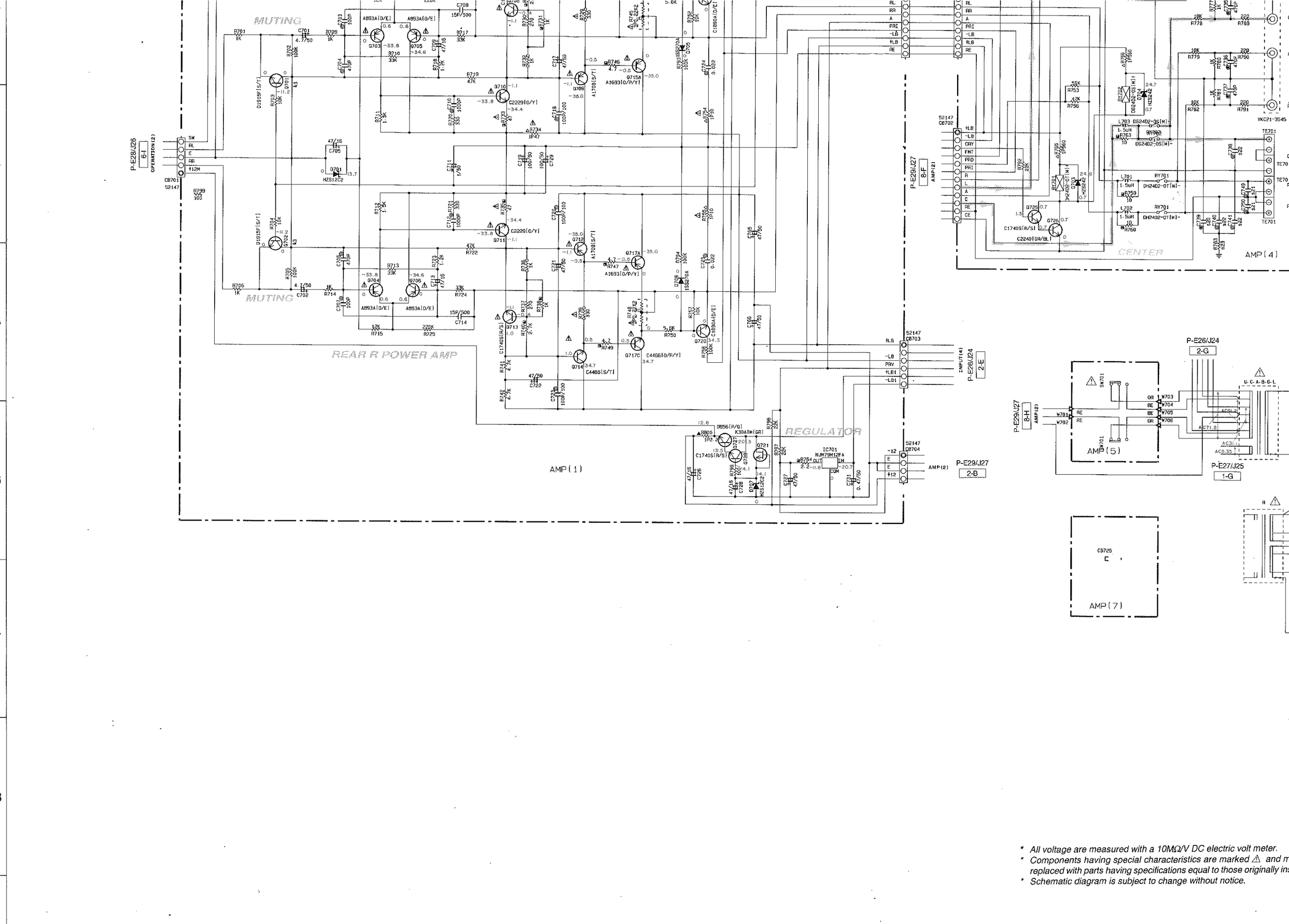

* All voltage are measured with a 10MΩ/V DC electric volt meter.
* Components having special characteristics are marked ⚠ and m
replaced with parts having specifications equal to those originally ins
* Schematic diagram is subject to change without notice.

ARTS NAME	
C CAPACITOR	
APACITOR	
PACITOR	
BULAR CAPACITOR	
ILM CAPACITOR	
FILM CAPACITOR	
ITOR	
NE FILM CAPACITOR	
IVE CERAMIC CAPACITOR	

NOTICE (model)
(J)····· JAPANESE
(U)····· U. S. A
(C)····· CANADIAN
(R)····· GENERAL
(A)····· AUSTRALIAN
(B)····· BRITISH
(G)····· EUROPEAN
(T)····· CHINA
(L)····· SINGAPORE

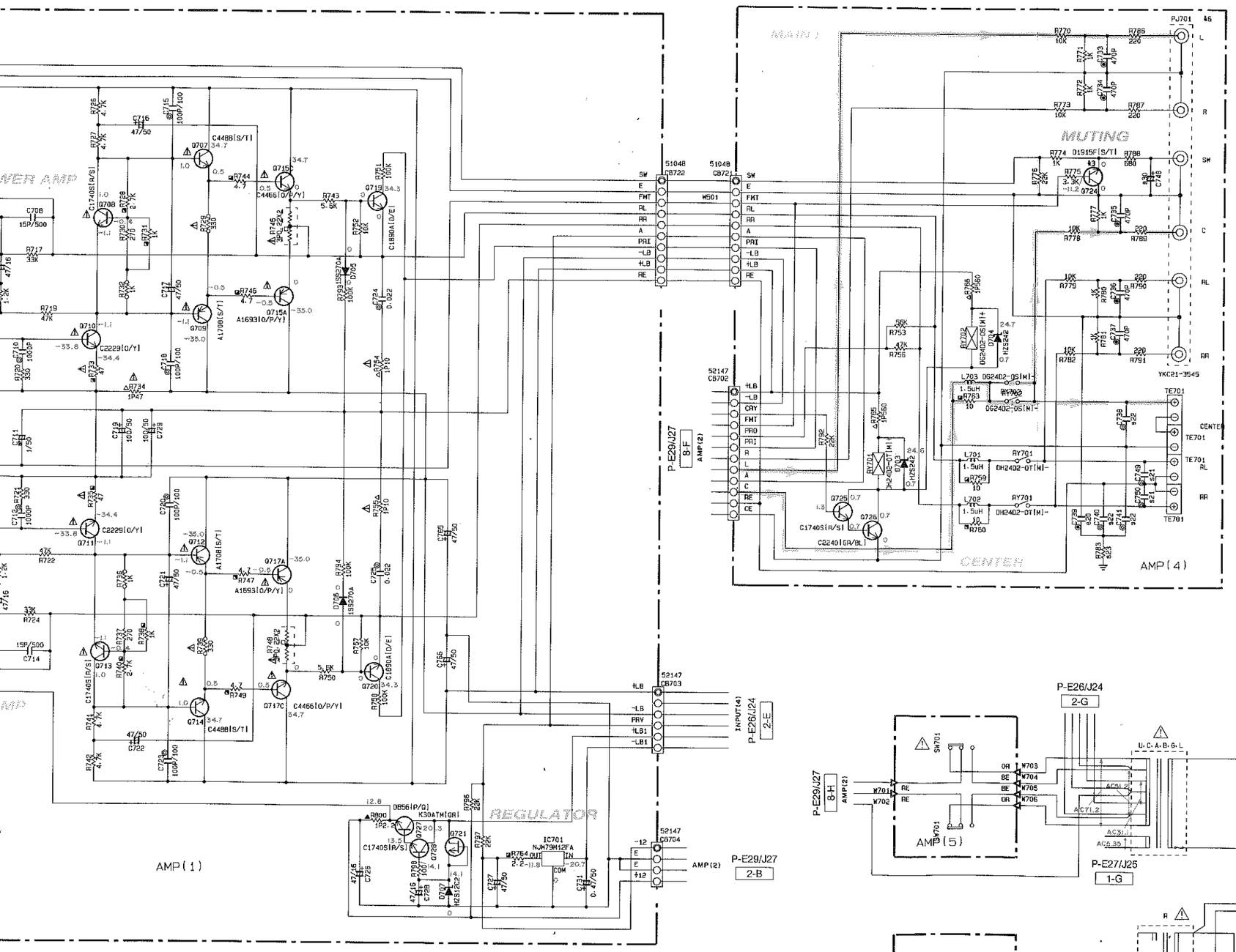

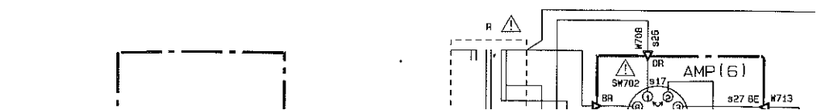

		U.C	R	A	B.G	L
s17	SW702	X	VA96160	X	X	X
s18	F705	X	T3.15AL250V	X	X	X
s19	CB719.CB720	X	VP20650	X	X	X
s20	C739	X	X	0.1	0.1	0.1
s21	C749.750	X	X	0.01	0.01	0.01
s22	C736.740.741	X	X	0.022	0.022	0.022
s23	R783	X	X	2.2	2.2	2.2
s24	W709	X	MH01240	X	X	X
s25	W710	X	MH04240	X	X	X
s26	W708	X	MH03240	X	X	X
s27	W713	X	MH06240	X	X	X
s28	W714	X	MH02240	X	X	X
s29	W715	X	MH09240	X	X	X
s30	C748	0.47/50	0.47/50	0.47/50	1/50	1/50

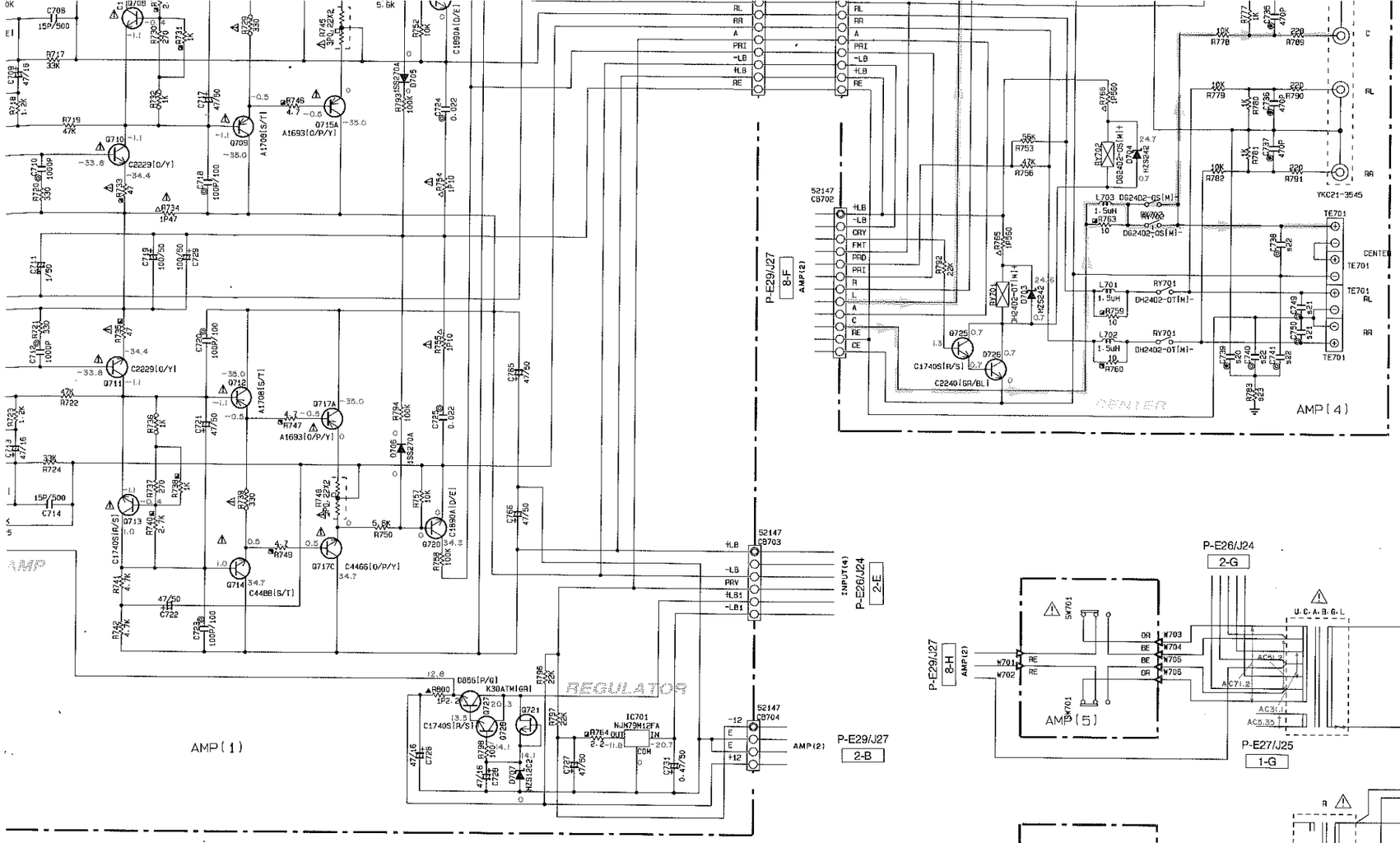

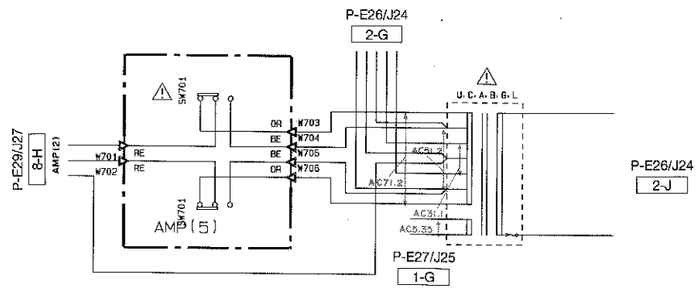

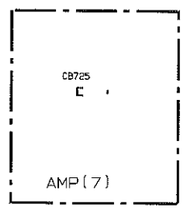

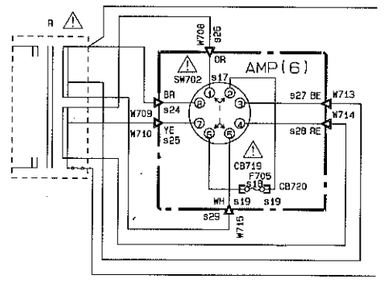

SW702
VOLTAGE SELECTOR

240V	1–2/5–6
220V	2–3/6–7
110V	3–4/7–8
120V	4–5/8–1

		U.C	R	A	B.G	L
s17	SW702	X	VA96180	X	X	X
s18	F705	X	T3.15AL250V	X	X	X
s19	CB719·CB720	X	VP20650	X	X	X
s20	C739	X	X	0.1	0.1	0.1
s21	C749.750	X	X	0.01	0.01	0.01
s22	C738.740.741	X	X	0.022	0.022	0.022
s23	R783	X	X	2.2	2.2	2.2
s24	W709	X	MH01240	X	X	X
s25	W710	X	MH04240	X	X	X
s26	W708	X	MH03240	X	X	X
s27	W713	X	MH05240	X	X	X
s28	W714	X	MH02240	X	X	X
s29	W715	X	MH05240	X	X	X
s30	C748	0.47/50	0.47/50	0.47/50	1/50	1/50

* *All voltage are measured with a 10MΩ/V DC electric volt meter.*
* *Components having special characteristics are marked ⚠ and must be replaced with parts having specifications equal to those originally installed.*
* *Schematic diagram is subject to change without notice.*

● 電圧は、内部抵抗10MΩの電圧計で測定したものです。
● ⚠印のある部品は、安全性確保部品を示しています。部品の交換が必要な場合、パーツリストに記載されている部品を使用してください。
● 本回路図は標準回路図です。改良のため予告なく変更することがございます。

PARTS LIST

■ ELECTRICAL PARTS

■ **WARNING**
Components having special characteristics are marked ⚠ and must be replaced with parts having specifications equal to those originally installed.

● Carbon resistors (1/6W or 1/4W) are not included in the ELECTRICAL PARTS List. For the part Nos. of the carbon resistors, refer to the last page.

ABBREVIATIONS IN THIS LIST ARE AS FOLLOWS :

C.A.EL.CHP	:	CHIP ALUMI. ELECTROLYTIC CAP
C.CE	:	CERAMIC CAP
C.CE.ARRAY	:	CERAMIC CAP ARRAY
C.CE.CHP	:	CHIP CERAMIC CAP
C.CE.ML	:	MULTILAYER CERAMIC CAP
C.CE.M.CHP	:	CHIP MULTILAYER CERAMIC CAP
C.CE.SAFTY	:	RECOGNIZED CERAMIC CAP
C.CE.TUBLR	:	CERAMIC TUBULAR CAP
C.CE.SMI	:	SEMI CONDUCTIVE CERAMIC CAP
C.EL	:	ELECTROLYTIC CAP
C.MICA	:	MICA CAP
C.ML.FLM	:	MULTILAYER FILM CAP
C.MP	:	METALLIZED PAPER CAP
C.MYLAR	:	MYLAR FILM CAP
C.MYLAR.ML	:	MULTILAYER MYLAR FILM CAP
C.PAPER	:	PAPER CAPACITOR
C.PLS	:	POLYSTYRENE FILM CAP
C.POL	:	POLYESTER FILM CAP
C.POLY	:	POLYETHYLENE FILM CAP
C.PP	:	POLYPROPYLENE FILM CAP
C.TNTL	:	TANTALUM CAP
C.TNTL.CHP	:	CHIP TANTALUM CAP
C.TRIM	:	TRIMMER CAP
CN	:	CONNECTOR
CN.BS.PIN	:	CONNECTOR, BASE PIN
CN.CANNON	:	CONNECTOR, CANNON
CN.DIN	:	CONNECTOR, DIN
CN.FLAT	:	CONNECTOR, FLAT CABLE
CN.POST	:	CONNECTOR, BASE POST
COIL.MX.AM	:	COIL, AM MIX
COIL.AT.FM	:	COIL, FM ANTENNA
COIL.DT.FM	:	COIL, FM DETECT
COIL.MX.FM	:	COIL, FM MIX
COIL.OUTPT	:	OUTPUT COIL
DIOD.ARRAY	:	DIODE ARRAY
DIODE.BRG	:	DIODE BRIDGE
DIODE.CHP	:	CHIP DIODE
DIODE.VAR	:	VARACTOR DIODE
DIOD.Z.CHP	:	CHIP ZENER DIODE
DIODE.ZENR	:	ZENER DIODE
DSCR.CE	:	CERAMIC DISCRIMINATOR
FER.BEAD	:	FERRITE BEADS
FER.CORE	:	FERRITE CORE
FET.CHP	:	CHIP FET
FL.DSPLY	:	FLUORESCENT DISPLAY
FLTR.CE	:	CERAMIC FILTER
FLTR.COMB	:	COMB FILTER MODULE
FLTR.LC.RF	:	LC FILTER ,EMI
GND.MTL	:	GROUND PLATE
GND.TERM	:	GROUND TERMINAL
HOLDER.FUS	:	FUSE HOLDER
IC.PRTCT	:	IC PROTECTOR
JUMPER.CN	:	JUMPER CONNECTOR
JUMPER.TST	:	JUMPER, TEST POINT
L.DTCT	:	LIGHT DETECTING MODULE
L.EMIT	:	LIGHT EMITTING MODULE
LED.DSPLY	:	LED DISPLAY
LED.INFRD	:	LED, INFRARED
MODUL.RF	:	MODULATOR, RF
PHOT.CPL	:	PHOTO COUPLER
PHOT.INTR	:	PHOTO INTERRUPTER
PHOT.RFLCT	:	PHOTO REFLECTOR
PIN.TEST	:	PIN, TEST POINT
PLST.RIVET	:	PLASTIC RIVET
R.ARRAY	:	RESISTOR ARRAY
R.CAR	:	CARBON RESISTOR
R.CAR.CHP	:	CHIP RESISTOR
R.CAR.FP	:	FLAME PROOF CARBON RESISTOR
R.FUS	:	FUSABLE RESISTOR
R.MTL.CHP	:	CHIP METAL FILM RESISTOR
R.MTL.FLM	:	METAL FILM RESISTOR
R.MTL.OXD	:	METAL OXIDE FILM RESISTOR
R.MTL.PLAT	:	METAL PLATE RESISTOR
RSNR.CE	:	CERAMIC RESONATOR
RSNR.CRYS	:	CRYSTAL RESONATOR
R.TW.CEM	:	TWIN CEMENT FIXED RESISTOR
R.WW	:	WIRE WOUND RESISTOR
SCR.BND.HD	:	BIND HEAD B-TITE SCREW
SCR.BW.HD	:	BW HEAD TAPPING SCREW
SCR.CUP	:	CUP TITE SCREW
SCR.TERM	:	SCREW TERMINAL
SCR.TR	:	SCREW, TRANSISTOR
SUPRT.PCB	:	SUPPORT, P.C.B.
SURG.PRTCT	:	SURGE PROTECTOR
SW.TACT	:	TACT SWITCH
SW.LEAF	:	LEAF SWITCH
SW.LEVER	:	LEVER SWITCH
SW.MICRO	:	MICRO SWITCH
SW.PUSH	:	PUSH SWITCH
SW.RT.ENC	:	ROTARY ENCODER
SW.RT.MTR	:	ROTARY SWITCH WITH MOTOR
SW.RT	:	ROTARY SWITCH
SW.SLIDE	:	SLIDE SWITCH
TERM.SP	:	SPEAKER TERMINAL
TERM.WRAP	:	WRAPPING TERMINAL
THRMST.CHP	:	CHIP THERMISTOR
TR.CHP	:	CHIP TRANSISTOR
TR.DGT	:	DIGITAL TRANSISTOR
TR.DGT.CHP	:	CHIP DIGITAL TRANSISTOR
TRANS	:	TRANSFORMER
TRANS.PULS	:	PULSE TRANSFORMER
TRANS.PWR	:	POWER TRANSFORMER ASS'y
TUNER.AM	:	TUNER PACK, AM
TUNER.FM	:	TUNER PACK, FM
TUNER.PK	:	FRONT-END TUNER PACK
VR	:	ROTARY POTENTIOMETER
VR.MTR	:	POTENTIOMETER WITH MOTOR
VR.SW	:	POTENTIOMETER WITH ROTARY SW
VR.SLIDE	:	SLIDE POTENTIOMETER
VR.TRIM	:	TRIMMER POTENTIOMETER

Note) Those parts marked with "#" are not included in the P.C.B. ass'y.

P.C.B. OPERATION

	Schm Ref.	PART NO.	Description		
*		VV575400	P.C.B.	OPERATION(R)	
*		VV575500	P.C.B.	OPERATION(BG)	
	CB6	Vi878500	CN.BS.PIN	7P	
	CB7	VK025100	CN.BS.PIN	7P	
	CB8	Vi878600	CN.BS.PIN	8P	
	CB9	Vi878300	CN.BS.PIN	5P	
	CB10	VK025200	CN.BS.PIN	8P	
	CB251	Vi878900	CN.BS.PIN	11P	
	CB252	Vi878900	CN.BS.PIN	11P	
	CB602	VU282000	CN	20P	
	CB603	Vi878900	CN.BS.PIN	11P	
	CB901	VK025200	CN.BS.PIN	8P	
	CB902	VK025300	CN.BS.PIN	9P	
	C103	VH053100	C.CE.TUBLR	0.1uF	50V
	C104	VF466800	C.CE.TUBLR	100pF	50V
	C105	VH053100	C.CE.TUBLR	0.1uF	50V
	C106	VF466800	C.CE.TUBLR	100pF	50V
	C127	VJ839000	C.EL	0.47uF	50V
	C128	VJ839000	C.EL	0.47uF	50V
	C129	VJ839200	C.EL	2.2uF	50V
	C130	VJ839200	C.EL	2.2uF	50V
	C131	VJ839200	C.EL	2.2uF	50V
	C134	UA652100	C.MYLAR	100pF	50V
	C135	UA652100	C.MYLAR	100pF	50V
	C138	UM417100	C.EL	10uF	50V
	C139	FG211100	C.CE	10pF	50V
	C140	VJ837200	C.EL	47uF	16V
	C141	VG278400	C.CE.TUBLR	220pF	50V
	C142	FG212100	C.CE	100pF	50V
	C143	VG278400	C.CE.TUBLR	220pF	50V
	C144	UM417100	C.EL	10uF	50V
	C145	VJ837200	C.EL	47uF	16V
	C147	UM417100	C.EL	10uF	50V
	C148	FG211100	C.CE	10pF	50V
	C149	VJ837200	C.EL	47uF	16V
	C150	VJ837200	C.EL	47uF	16V
	C152	FG211100	C.CE	10pF	50V
	C153	VJ837200	C.EL	47uF	16V
	C154	UM417100	C.EL	10uF	50V
	C168	VG722100	C.EL	1uF	50V
	C169	VH053100	C.CE.TUBLR	0.1uF	50V
	C189	UJ638470	C.EL	470uF	16V
	C257	VH053100	C.CE.TUBLR	0.1uF	50V
	C258	VG278400	C.CE.TUBLR	220pF	50V
	C259	VG278400	C.CE.TUBLR	220pF	50V
	C260	VG278400	C.CE.TUBLR	220pF	50V
	C261	VG278400	C.CE.TUBLR	220pF	50V
	C262	VG278400	C.CE.TUBLR	220pF	50V
	C263	VG278400	C.CE.TUBLR	220pF	50V
	C264	VJ839200	C.EL	2.2uF	50V
	C601	VJ839000	C.EL	0.47uF	50V
	C602	VH053100	C.CE.TUBLR	0.1uF	50V
	C603	VJ839200	C.EL	2.2uF	50V

* New Parts

	Schm Ref.	PART NO.	Description		
	C604	VF637900	C.EL	1000uF	10V
	C605	VU545000	C.EL	47000uF	5.5V
	C606	VH053100	C.CE.TUBLR	0.1uF	50V
	C607	VH053100	C.CE.TUBLR	0.1uF	50V
	C609	VF466800	C.CE.TUBLR	100pF	50V(BG)
	C610	VF466800	C.CE.TUBLR	100pF	50V(BG)
	C611	VF466800	C.CE.TUBLR	100pF	50V(BG)
	C612	VF466800	C.CE.TUBLR	100pF	50V(BG)
	C613	VF466800	C.CE.TUBLR	100pF	50V(BG)
	C901	VJ839100	C.EL	1uF	50V
	C902	UM215100	C.EL	0.1uF	50V
	C903	VJ839000	C.EL	0.47uF	50V
	C904	VG287800	C.EL	330uF	16V
	C905	VG287800	C.EL	330uF	16V
	C906	UM215100	C.EL	0.1uF	50V
	C907	VJ839000	C.EL	0.47uF	50V
	C908	VJ839100	C.EL	1uF	50V
	C909	UM407220	C.EL	22uF	16V
	C910	FG211470	C.CE	47pF	50V
	C911	VJ839200	C.EL	2.2uF	50V
	C912	VJ839200	C.EL	2.2uF	50V
	C913	FG211470	C.CE	47pF	50V
	C914	UM407220	C.EL	22uF	16V
	C915	UA655120	C.MYLAR	0.12uF	50V
	C916	UA654330	C.MYLAR	0.033uF	50V
	C917	UA654330	C.MYLAR	0.033uF	50V
	C918	UA655120	C.MYLAR	0.12uF	50V
	D14	VM974200	DIODE.ZENR	HZS5C2TD	5.0V
	D601	VM974100	DIODE.ZENR	HZS5B2TD	5.0V
	D602	VM974100	DIODE.ZENR	HZS5B2TD	5.0V
	D603	VD631600	DIODE	1SS133,176,HSS104	
	D604	VD631600	DIODE	1SS133,176,HSS104	
	D605	VD631600	DIODE	1SS133,176,HSS104	
	D606	VD631600	DIODE	1SS133,176,HSS104	
	D607	VD631600	DIODE	1SS133,176,HSS104	
	D610	VS132300	LED(re)	SLR-325VCT31	
	D611	VD631600	DIODE	1SS133,176,HSS104	
	D612	VM974300	DIODE.ZENR	HZS6A2TD	6.0V
	D613	VD631600	DIODE	1SS133,176,HSS104	
	D614	VD631600	DIODE	1SS133,176,HSS104	
	D615	VD631600	DIODE	1SS133,176,HSS104	
	G601	VR463400	TERM.GND	D3.5	TP00385
	IC22	XB247301	IC	uPC4570HA	
	IC23	XB247301	IC	uPC4570HA	
	IC26	XR040A00	IC	TC9299P	
	IC27	XR040A00	IC	TC9299P	
	IC28	XF494A00	IC	LB1641	
	IC251	XP896A00	IC	LC78213	
	IC601	XS983A00	IC	M38172M4-192FP CPU	
	IC901	XB247301	IC	uPC4570HA	
	JK1	VU245200	CN.DIN	1P	
*	PJ5	VV325100	JACK.PIN	3P	
*	PJ251	VV577800	JACK.PIN	6P	

* New Parts

P.C.B. OPERATION & INPUT

	Schm Ref.	PART NO.	Description		
	Q601	iC174020	TR	2SC1740S R,S	
	Q602	VG722000	TR.DGT	DTC144ES	
	Q603	VD678500	TR.DGT	DTA114ES	
	Q604	iA093320	TR	2SA933S Q,R	
	Q901	VK432900	TR	2SD1915F S,T(BG)	
	Q902	VK432900	TR	2SD1915F S,T(BG)	
	Q903	VK432900	TR	2SD1915F S,T(BG)	
	Q904	VK432900	TR	2SD1915F S,T(BG)	
	R217	HV453470	R.CAR.FP	4.7Ω	1/4W
	R218	HV453470	R.CAR.FP	4.7Ω	1/4W
	R219	HV454100	R.CAR.FP	10Ω	1/4W
	R221	HV454100	R.CAR.FP	10Ω	1/4W
	R931	HL315100	R.MTL.OXD	100Ω	1W
	R932	HL315100	R.MTL.OXD	100Ω	1W
	SW601	VG392900	SW.TACT	SKHVAA	
	SW602	VG392900	SW.TACT	SKHVAA	
	SW603	VG392900	SW.TACT	SKHVAA	
	SW606	VG392900	SW.TACT	SKHVAA	
	SW607	VG392900	SW.TACT	SKHVAA	
	SW608	VG392900	SW.TACT	SKHVAA	
	SW609	VG392900	SW.TACT	SKHVAA	
	SW612	VG392900	SW.TACT	SKHVAA	
	SW613	VG392900	SW.TACT	SKHVAA	
	SW614	VG392900	SW.TACT	SKHVAA	
	SW615	VG392900	SW.TACT	SKHVAA	
	SW620	VG392900	SW.TACT	SKHVAA	
	SW621	VG392900	SW.TACT	SKHVAA	
	SW624	VG392900	SW.TACT	SKHVAA	
	SW625	VG392900	SW.TACT	SKHVAA	
	SW626	VG392900	SW.TACT	SKHVAA	
	SW627	VG392900	SW.TACT	SKHVAA	
	SW632	VG392900	SW.TACT	SKHVAA	
	SW633	VG392900	SW.TACT	SKHVAA	
	SW634	VG392900	SW.TACT	SKHVAA	
	SW637	VG392900	SW.TACT	SKHVAA	
	SW638	VG392900	SW.TACT	SKHVAA	
	SW639	VG392900	SW.TACT	SKHVAA	
*	SW901	VV887300	SW.PUSH	SPUN19	
	U601	VU591000	L.DTCT	GP1U271X	
*	V601	VV485500	FL.DSPLY	13-BT-149GK	
*	VR1	VV135100	VR.MTR	A100KΩ	
	VR901	VP741800	VR	B20KΩ	
	VR902	VP741900	VR	G25KΩ	
	VR903	VP742000	VR	MN100KΩ	
	XL601	VR891500	RSNR.CE	6.30MHz	
		VJ828000	PIN	IMSA-6024-03E	
		BB071360	SCR.TERM	8.3x13	
		VR011400	SHEET.FL		
*		VV499900	SPACER	FL-T7.5	

*New Parts

	Schm Ref.	PART NO.	Description		
*		VV819500	P.C.B.	INPUT(R)	
*		VV953100	P.C.B.	INPUT(B)	
*		VV953200	P.C.B.	INPUT(G)	
	CB1	Vi878700	CN.BS.PIN	9P	
	CB2	VK025100	CN.BS.PIN	7P	
	CB3	Vi878500	CN.BS.PIN	7P	
	CB4	Vi878600	CN.BS.PIN	8P	
	CB5	VQ047500	CN.BS.PIN	20P	
	CB11	Vi878700	CN.BS.PIN	9P	
	CB705	Vi878400	CN.BS.PIN	6P	
	CB706	VK024700	CN.BS.PIN	3P	
	CB712	VP206500	HOLDER.FUS	EYF-52BC(R)	
	CB713	VP206500	HOLDER.FUS	EYF-52BC(R)	
	CB714	VP206500	HOLDER.FUS	EYF-52BC(G)	
	CB715	VP206500	HOLDER.FUS	EYF-52BC(G)	
	CB716	VP206500	HOLDER.FUS	EYF-52BC(BG)	
	CB717	VG879900	CN.BS.PIN	2P	
	CB718	VP206500	HOLDER.FUS	EYF-52BC(BG)	
	C2	UA652100	C.MYLAR	100pF	50V(BG)
	C3	UA652220	C.MYLAR	220pF	50V
	C4	UA652100	C.MYLAR	100pF	50V(BG)
	C5	UA652220	C.MYLAR	220pF	50V
	C7	VK533900	C.PP	100pF	200V
	C8	VK533900	C.PP	100pF	200V
	C9	VF466800	C.CE.TUBLR	100pF	50V
	C10	VF466800	C.CE.TUBLR	100pF	50V
	C11	VF466800	C.CE.TUBLR	100pF	50V
	C12	VF466800	C.CE.TUBLR	100pF	50V
	C13	VF466800	C.CE.TUBLR	100pF	50V
	C14	VF466800	C.CE.TUBLR	100pF	50V
	C15	FG211470	C.CE	47pF	50V
	C16	FG211470	C.CE	47pF	50V
	C17	VF466800	C.CE.TUBLR	100pF	50V
	C18	VF466800	C.CE.TUBLR	100pF	50V
	C21	VF466800	C.CE.TUBLR	100pF	50V
	C22	VF466800	C.CE.TUBLR	100pF	50V
	C23	FG211470	C.CE	47pF	50V
	C24	FG211470	C.CE	47pF	50V
	C25	VJ839200	C.EL	2.2uF	50V
	C26	VE117600	C.EL	220uF	10V
	C27	VJ837200	C.EL	47uF	16V
	C28	UA653910	C.MYLAR	9100pF	50V
	C29	UA654330	C.MYLAR	0.033uF	50V
	C30	UA653910	C.MYLAR	9100pF	50V
	C31	UA654330	C.MYLAR	0.033uF	50V
	C32	VJ837200	C.EL	47uF	16V
	C33	VE117600	C.EL	220uF	10V
	C34	VJ839200	C.EL	2.2uF	50V
	C35	UM417100	C.EL	10uF	50V
	C36	UA652100	C.MYLAR	100pF	50V
	C37	UM417100	C.EL	10uF	50V
	C38	UM417100	C.EL	10uF	50V
	C39	UA652100	C.MYLAR	100pF	50V

*New Parts

P.C.B. INPUT

Schm Ref.	PART NO.	Description		
C41	VJ839100	C.EL	1uF	50V
C42	UA652100	C.MYLAR	100pF	50V
C43	UA652100	C.MYLAR	100pF	50V
C44	UA652100	C.MYLAR	100pF	50V
C45	UA652100	C.MYLAR	100pF	50V
C46	VJ839100	C.EL	1uF	50V
C47	UA652100	C.MYLAR	100pF	50V
C48	UA655150	C.MYLAR	0.15uF	50V
C49	VJ839100	C.EL	1uF	50V
C50	VJ839100	C.EL	1uF	50V
C51	UM417100	C.EL	10uF	50V
C52	VF466800	C.CE.TUBLR	100pF	50V
C53	VG279600	C.CE.TUBLR	3300pF	16V
C54	UM417100	C.EL	10uF	50V
C55	UM417100	C.EL	10uF	50V
C56	UM417100	C.EL	10uF	50V
C57	VG279600	C.CE.TUBLR	3300pF	16V
C58	VF466800	C.CE.TUBLR	100pF	50V
C59	UA653680	C.MYLAR	6800pF	50V
C60	VG287800	C.EL	330uF	16V
C61	VJ837200	C.EL	47uF	16V
C62	VJ839100	C.EL	1uF	50V
C63	UA652220	C.MYLAR	220pF	50V
C64	UA652220	C.MYLAR	220pF	50V
C65	VJ839100	C.EL	1uF	50V
C66	VG287800	C.EL	330uF	16V
C67	UA653680	C.MYLAR	6800pF	50V
C68	UA653470	C.MYLAR	4700pF	50V
C69	UA653120	C.MYLAR	1200pF	50V
C70	UA654180	C.MYLAR	0.018uF	50V
C71	FG612390	C.CE	390pF	50V
C73	FG612390	C.CE	390pF	50V
C75	UA653120	C.MYLAR	1200pF	50V
C76	UA654180	C.MYLAR	0.018uF	50V
C77	UA653470	C.MYLAR	4700pF	50V
C78	UM407220	C.EL	22uF	16V
C79	UM407220	C.EL	22uF	16V
C80	UM407220	C.EL	22uF	16V
C81	UM407220	C.EL	22uF	16V
C82	UA652330	C.MYLAR	330pF	50V
C83	UM407220	C.EL	22uF	16V
C84	UM407220	C.EL	22uF	16V
C85	UA652330	C.MYLAR	330pF	50V
C86	UA652330	C.MYLAR	330pF	50V
C87	UM407220	C.EL	22uF	16V
C88	UM407220	C.EL	22uF	16V
C89	VJ839100	C.EL	1uF	50V
C90	VG277000	C.CE.TUBLR	33pF	50V
C91	VG278400	C.CE.TUBLR	220pF	50V
C92	VG279500	C.CE.TUBLR	2700pF	16V
C93	VG278400	C.CE.TUBLR	220pF	50V
C94	VG279500	C.CE.TUBLR	2700pF	16V
C95	VG277000	C.CE.TUBLR	33pF	50V

* New Parts

Schm Ref.	PART NO.	Description		
C96	VJ839100	C.EL	1uF	50V
C97	VG277000	C.CE.TUBLR	33pF	50V
C98	UA653270	C.MYLAR	2700pF	50V
C99	VF466600	C.CE.TUBLR	10pF	50V
C100	VF466600	C.CE.TUBLR	10pF	50V
C101	UA653270	C.MYLAR	2700pF	50V
C102	VG277000	C.CE.TUBLR	33pF	50V
C108	UM407220	C.EL	22uF	16V
C109	UM407220	C.EL	22uF	16V
C111	VG279600	C.CE.TUBLR	3300pF	16V
C112	VG279600	C.CE.TUBLR	3300pF	16V
C113	VH053100	C.CE.TUBLR	0.1uF	50V
C114	VH053100	C.CE.TUBLR	0.1uF	50V
C115	UJ638330	C.EL	330uF	16V
C116	VH053100	C.CE.TUBLR	0.1uF	50V
C117	VH053100	C.CE.TUBLR	0.1uF	50V
C118	VJ837200	C.EL	47uF	16V
C119	VJ837200	C.EL	47uF	16V
C120	VJ837200	C.EL	47uF	16V
C121	VF964800	C.EL	100uF	16V
C122	VE117600	C.EL	220uF	10V
C124	VH053100	C.CE.TUBLR	0.1uF	50V
C125	VJ837200	C.EL	47uF	16V
C155	VF466800	C.CE.TUBLR	100pF	50V
C156	VF466800	C.CE.TUBLR	100pF	50V
C157	VJ836900	C.EL	10uF	16V
C158	VJ836900	C.EL	10uF	16V
C159	VJ836900	C.EL	10uF	16V
C160	VF637900	C.EL	1000uF	10V
C161	VF466800	C.CE.TUBLR	100pF	50V
C164	VF637900	C.EL	1000uF	10V
C165	VF466800	C.CE.TUBLR	100pF	50V
C171	VJ836900	C.EL	10uF	16V
C172	VJ837200	C.EL	47uF	16V
C173	VF637900	C.EL	1000uF	10V
C174	VG276600	C.CE.TUBLR	22pF	50V
C175	VJ837200	C.EL	47uF	16V
C176	VF637900	C.EL	1000uF	10V
C177	VF466800	C.CE.TUBLR	100pF	50V
C178	VF466800	C.CE.TUBLR	100pF	50V
C179	VJ836900	C.EL	10uF	16V
C180	VJ837200	C.EL	47uF	16V
C181	UM397330	C.EL	33uF	16V
C182	VG276600	C.CE.TUBLR	22pF	50V
C183	VJ837200	C.EL	47uF	16V
C184	UM397330	C.EL	33uF	16V
C185	VH053100	C.CE.TUBLR	0.1uF	50V
C186	VJ837200	C.EL	47uF	16V
C187	UJ638330	C.EL	330uF	16V
C190	VH053100	C.CE.TUBLR	0.1uF	50V
C729	VY841300	C.EL	3300uF	50V
C730	VY841300	C.EL	3300uF	50V
C731	VH053100	C.CE.TUBLR	0.1uF	50V

* New Parts

P.C.B. INPUT & AMP

	Schm Ref.	PART NO.	Description	
	C732	UJ648470	C.EL	470uF 25V
	C733	VH053100	C.CE.TUBLR	0.1uF 50V
	C734	VH053100	C.CE.TUBLR	0.1uF 50V
	C742	VS745400	C.POL.MTL	0.1uF 100V
	C743	VS745400	C.POL.MTL	0.1uF 100V
	C744	UA655100	C.MYLAR	0.1uF 50V(BG)
	C745	FG213100	C.CE	1000pF 50V(R)
	C746	Ui377470	C.EL	47uF 63V(R)
	C747	Vi716700	C.MYLAR	0.01uF 50V
	C751	UA654100	C.MYLAR	0.01uF 50V
⚠	C752	VS741700	C.CE.SAFTY	0.01uF 275V
	C760	UJ649220	C.EL	2200uF 25V
	C761	VF606700	C.EL	1000uF 25V
	C762	VS745400	C.POL.MTL	0.1uF 100V
	D7	VD631600	DIODE	1SS133,176,HSS104
	D251	VD631600	DIODE	1SS133,176,HSS104
⚠	D702	VR253700	DIODE.BRG	S1NB20 1.0A 200V
⚠	D705	iH001090	DIODE.BRG	S4VB20 2.6A 200V
	D706	VD631600	DIODE	1SS133,176,HSS104
⚠	D707	VR253700	DIODE.BRG	S1NB20 1.0A 200V
	D708	VM975600	DIODE.ZENR	HZS12B2TD 12V(R)
⚠	F702	VP909900	FUSE	T7.0A 125V(R)
⚠	F703	KB002980	FUSE	T2.5A 250V(G)
⚠	F704	KB000760	FUSE	T3.15A 250V(BG)
	IC1	XB247301	IC	uPC4570HA
	IC2	XP894A00	IC	LC78211
	IC3	XB247301	IC	uPC4570HA
	IC4	XB247301	IC	uPC4570HA
	IC7	XB247301	IC	uPC4570HA
	IC8	XB247301	IC	uPC4570HA
	IC9	XB247301	IC	uPC4570HA
	IC10	XB247301	IC	uPC4570HA
	IC11	XB247301	IC	uPC4570HA
	IC12	XB247301	IC	uPC4570HA
	IC13	XQ212A00	IC	NJM4558LD
	IC14	XB247301	IC	uPC4570HA
	IC15	XM922A00	IC	NJM4558L
	IC16	XP896A00	IC	LC78213
	IC17	Xi022B00	IC	YSS203B-F
*	IC18	XS881A00	IC	LH5P832D-10 PSRAM
	IC19	XA507A00	IC	AN78N05
	IC29	XH436A00	IC	LA7956
	IC31	XH436A00	IC	LA7956
	IC32	XH436A00	IC	LA7956
	JK2	VN938100	CN.DIN	3P S
	PJ1	VV306900	JACK.PIN	4P
	PJ2	VV306900	JACK.PIN	4P
	PJ3	VT974600	JACK.PIN	6P
	PJ4	VV306900	JACK.PIN	4P
*	PJ6	VV325000	JACK.PIN	2P
*	PJ7	VV852500	JACK.PIN	3P
	Q3	iA101521	TR	2SA1015 Y
	Q4	iC1815C0	TR	2SC1815 Y

*New Parts

	Schm Ref.	PART NO.	Description	
	Q5	iA101521	TR	2SA1015 Y
	Q6	iC1815C0	TR	2SC1815 Y
	Q7	iC1815C0	TR	2SC1815 Y
	Q252	iC1815C0	TR	2SC1815 Y
	Q253	iC174020	TR	2SC1740S R,S
	Q723	iC174020	TR	2SC1740S R,S
	Q725	VR510800	TR	2SD2396 J,K(R)
	R35	HV453220	R.CAR.FP	2.2Ω 1/4W
	R50	HV453220	R.CAR.FP	2.2Ω 1/4W
	R136	HV453220	R.CAR.FP	2.2Ω 1/4W
	R149	HV453220	R.CAR.FP	2.2Ω 1/4W
	R150	HV453220	R.CAR.FP	2.2Ω 1/4W
	R151	HL314470	R.MTL.OXD	47Ω 1W
	R152	HV453220	R.CAR.FP	2.2Ω 1/4W
	R242	HV453220	R.CAR.FP	2.2Ω 1/4W
	R784	HV456560	R.CAR.FP	5.6KΩ 1/4W(R)
	R785	HV456560	R.CAR.FP	5.6KΩ 1/4W(R)
⚠	RY703	VU349800	RELAY	DC SDT-SS112DM(BG)
⚠	RY703	VY735300	RELAY	DC G5P-1(R)
⚠	T701	XQ486B00	TRANS.PWR	(BG)
⚠	T701	XT331A00	TRANS.PWR	(R)
⚠	TE703	VU543300	OUTLET.AC	1P(B)
⚠	TE703	VU543400	OUTLET.AC	2P(G)
⚠*	TE703	VV118800	OUTLET.AC	3P(R)
	XL1	VK175200	RSNR.CE	11.28MHz
		VJ828000	PIN	IMSA-6024-03E
		VR506800	HEAT.SINK	PUH16-25(R)
		VR264300	PLATE.GND	
		ED330066	SCR.BND.HD	3x6 FCRM3-BL(R)
*		VV577200	P.C.B.	AMP(R)
*		VV577400	P.C.B.	AMP(BG)
	CB501	Vi878700	CN.BS.PIN	9P
	CB502	VK025500	CN.BS.PIN	11P
	CB520	Vi878200	CN.BS.PIN	4P
	CB521	VQ584800	CN.BS.PIN	6P
	CB522	VQ584800	CN.BS.PIN	6P
	CB523	VQ585000	CN.BS.PIN	8P
	CB524	VQ585000	CN.BS.PIN	8P
	CB525	Vi879000	CN.BS.PIN	12P
	CB526	Vi878100	CN.BS.PIN	3P
	CB529	LA002110	TERM.WRAP	2P
	CB530	LA002110	TERM.WRAP	2P
	CB531	LA002110	TERM.WRAP	2P
	CB532	LA002320	TERM.WRAP	3P
	CB701	VK024900	CN.BS.PIN	5P
	CB702	VK025600	CN.BS.PIN	12P
	CB703	VF728300	CN	6P
	CB704	VK024800	CN.BS.PIN	4P
	CB719	VP206500	HOLDER.FUS	EYF-52BC(R)
	CB720	VP206500	HOLDER.FUS	EYF-52BC(R)

*New Parts

P.C.B. AMP

Schm Ref.	PART NO.	Description		
CB721	Vi878800	CN.BS.PIN	10P	
CB722	Vi878800	CN.BS.PIN	10P	
CB725	VP206500	HOLDER.FUS	EYF-52BC	
C501	UM416470	C.EL	4.7uF	50V
C502	VJ839100	C.EL	1uF	50V(BG)
C503	UM417100	C.EL	10uF	50V
C504	UM417100	C.EL	10uF	50V
C505	VF760000	C.EL	100uF	10V
C506	VK399200	C.MYLAR.ML	0.39uF	50V
C507	UM416470	C.EL	4.7uF	50V
C508	FG212220	C.CE	220pF	50V(BG)
C508	FG251330	C.CE	33pF	50V(R)
C509	UA652100	C.MYLAR	100pF	50V
C510	FG212220	C.CE	220pF	50V(BG)
C510	FG251330	C.CE	33pF	50V(R)
C511	UA652100	C.MYLAR	100pF	50V
C512	FG212100	C.CE	100pF	50V(BG)
C512	FG251330	C.CE	33pF	50V(R)
C513	UM417100	C.EL	10uF	50V
C514	UA652100	C.MYLAR	100pF	50V
C515	UM417100	C.EL	10uF	50V
C516	VK399200	C.MYLAR.ML	0.39uF	50V
C517	VQ245400	C.PP	33pF	200V
C518	VJ837200	C.EL	47uF	16V
C519	UA653100	C.MYLAR	1000pF	50V
C520	VQ245400	C.PP	33pF	200V
C521	VJ837200	C.EL	47uF	16V
C522	UA653100	C.MYLAR	1000pF	50V
C523	VQ245400	C.PP	33pF	200V
C524	VJ837200	C.EL	47uF	16V
C525	UA653100	C.MYLAR	1000pF	50V
C526	VR325000	C.MYLAR	100pF	100V
C527	UJ667470	C.EL	47uF	50V
C528	UJ667470	C.EL	47uF	50V
C529	VR325000	C.MYLAR	100pF	100V
C530	VK347900	C.EL	470uF	63V
C531	VR325000	C.MYLAR	100pF	100V
C532	UJ667470	C.EL	47uF	50V
C533	UJ667470	C.EL	47uF	50V
C534	VR325000	C.MYLAR	100pF	100V
C535	VR325000	C.MYLAR	100pF	100V
C536	UJ667470	C.EL	47uF	50V
C537	UJ667470	C.EL	47uF	50V
C538	VR325000	C.MYLAR	100pF	100V
C539	VJ836900	C.EL	10uF	16V
C540	VJ839200	C.EL	2.2uF	50V
C541	VJ839100	C.EL	1uF	50V
C542	UA654680	C.MYLAR	0.068uF	50V
C543	UA654680	C.MYLAR	0.068uF	50V
C544	UA654680	C.MYLAR	0.068uF	50V
C545	UA654100	C.MYLAR	0.01uF	50V(BG)
C546	UA654220	C.MYLAR	0.022uF	50V(BG)
C547	UA654220	C.MYLAR	0.022uF	50V(BG)

* New Parts

Schm Ref.	PART NO.	Description		
C548	UA654220	C.MYLAR	0.022uF	50V(BG)
C549	UA654220	C.MYLAR	0.022uF	50V(BG)
C550	Vi716700	C.MYLAR	0.01uF	50V(BG)
C551	Vi716700	C.MYLAR	0.01uF	50V(BG)
* C552	VV887100	C.EL	12000uF	63V
* C553	VV887100	C.EL	12000uF	63V
C554	UA654100	C.MYLAR	0.01uF	50V(BG)
C555	UA654100	C.MYLAR	0.01uF	50V
C556	VS745400	C.POL.MTL	0.1uF	100V
C557	VS745400	C.POL.MTL	0.1uF	100V
C558	VH053100	C.CE.TUBLR	0.1uF	50V
C559	UJ167330	C.EL	33uF	50V
C701	UM416470	C.EL	4.7uF	50V
C702	UM416470	C.EL	4.7uF	50V
C703	UA652100	C.MYLAR	100pF	50V
C704	UA652470	C.MYLAR	470pF	50V
C705	VJ837200	C.EL	47uF	16V
C706	UA652470	C.MYLAR	470pF	50V
C707	UA652100	C.MYLAR	100pF	50V
C708	VR516400	C.CE	15p	500V
C709	VJ837200	C.EL	47uF	16V
C710	UA653100	C.MYLAR	1000pF	50V
C711	VG722100	C.EL	1uF	50V
C712	UA653100	C.MYLAR	1000pF	50V
C713	VJ837200	C.EL	47uF	16V
C714	VR516400	C.CE	15p	500V
C715	VR325000	C.MYLAR	100pF	100V
C716	UJ667470	C.EL	47uF	50V
C717	UJ667470	C.EL	47uF	50V
C718	VR325000	C.MYLAR	100pF	100V
C719	UJ668100	C.EL	100uF	50V
C720	VR325000	C.MYLAR	100pF	100V
C721	UJ667470	C.EL	47uF	50V
C722	UJ667470	C.EL	47uF	50V
C723	VR325000	C.MYLAR	100pF	100V
C724	UA654220	C.MYLAR	0.022uF	50V
C725	UA654220	C.MYLAR	0.022uF	50V
C726	VJ837200	C.EL	47uF	16V
C727	UJ667470	C.EL	47uF	50V
C728	VJ837200	C.EL	47uF	16V
C729	UJ668100	C.EL	100uF	50V
C731	VJ839000	C.EL	0.47uF	50V
C733	VF466900	C.CE.TUBLR	470pF	50V
C734	VF466900	C.CE.TUBLR	470pF	50V
C735	VF466900	C.CE.TUBLR	470pF	50V
C736	VF466900	C.CE.TUBLR	470pF	50V
C737	VF466900	C.CE.TUBLR	470pF	50V
C738	UA654220	C.MYLAR	0.022uF	50V(BG)
C739	VH053100	C.CE.TUBLR	0.1uF	50V(BG)
C740	UA654220	C.MYLAR	0.022uF	50V(BG)
C741	UA654220	C.MYLAR	0.022uF	50V(BG)
C748	VJ839000	C.EL	0.47uF	50V(R)
C748	VJ839100	C.EL	1uF	50V(BG)

* New Parts

P.C.B. AMP

	Schm Ref.	PART NO.	Description	
	C749	UA654100	C.MYLAR	0.01uF 50V(BG)
	C750	UA654100	C.MYLAR	0.01uF 50V(BG)
	C765	UJ667470	C.EL	47uF 50V
	C766	UJ667470	C.EL	47uF 50V
	D501	VM976300	DIODE.ZENR	HZS242TD 24V
	D502	VM976300	DIODE.ZENR	HZS242TD 24V
	D503	VM974500	DIODE.ZENR	HZS6C2TD 6.0V
	D504	VD631600	DIODE	1SS133,176,HSS104
	D505	VM974400	DIODE.ZENR	HZS6B2TD 6.0V
	D506	VN008700	DIODE	1SS270A
	D507	VN008700	DIODE	1SS270A
	D508	VN008700	DIODE	1SS270A
	D509	VD631600	DIODE	1SS133,176,HSS104
⚠	D510	VN011400	DIODE.BRG	D5SB20 5A 200V
	D511	VD631600	DIODE	1SS133,176,HSS104
	D512	VD631600	DIODE	1SS133,176,HSS104
	D513	VM975700	DIODE.ZENR	HZS12C2TD 12V
	D701	VM975700	DIODE.ZENR	HZS12C2TD 12V
	D703	VM976300	DIODE.ZENR	HZS242TD 24V
	D704	VM976300	DIODE.ZENR	HZS242TD 24V
	D705	VN008700	DIODE	1SS270A
	D706	VN008700	DIODE	1SS270A
	D707	VM975700	DIODE.ZENR	HZS12C2TD 12V
⚠	F705	KB000760	FUSE	T3.15A 250V(R)
	IC701	XD343A00	IC	NJM79M12FA
	JK501	VY687200	JACK.PHONE	JY-6317-02-030 NUT
	L501	VR906600	COIL	0.95uH
	L502	VR906600	COIL	0.95uH
	L701	VP575600	COIL	1.5uH
	L702	VP575600	COIL	1.5uH
	L703	VP575600	COIL	1.5uH
	PJ701	VR245000	JACK.PIN	6P
	Q502	VK432900	TR	2SD1915F S,T
	Q504	VK432900	TR	2SD1915F S,T
	Q505	VK432900	TR	2SD1915F S,T
	Q506	iA101521	TR	2SA1015 Y
	Q507	VP883000	TR	2SA893A D,E
	Q508	VP883000	TR	2SA893A D,E
	Q509	VP883000	TR	2SA893A D,E
	Q510	iC224030	TR	2SC2240 GR,BL
	Q511	VP883000	TR	2SA893A D,E
	Q512	VP883000	TR	2SA893A D,E
	Q513	VP883000	TR	2SA893A D,E
	Q514	iC174020	TR	2SC1740S R,S
	Q515	VR325600	TR	2SC2229 O,Y
	Q516	iC174020	TR	2SC1740S R,S
	Q517	VR325600	TR	2SC2229 O,Y
	Q518	iC174020	TR	2SC1740S R,S
	Q519	VR325600	TR	2SC2229 O,Y
	Q520	iC206110	TR	2SC2061 P,Q,R
	Q521	iA093320	TR	2SA933S Q,R
	Q522A	iX603580	TR	2SA1358
	Q522C	iX603590	TR	2SC3421

*New Parts

	Schm Ref.	PART NO.	Description	
#	Q523A	iX606460	TR	2SA1492 O,P,Y
#	Q523C	iX606470	TR	2SC3856 O,P,Y
	Q526A	iX603580	TR	2SA1358
	Q526C	iX603590	TR	2SC3421
#	Q527A	iX606460	TR	2SA1492 O,P,Y
#	Q527C	iX606470	TR	2SC3856 O,P,Y
	Q530A	iX603580	TR	2SA1358
	Q530C	iX603590	TR	2SC3421
#	Q531A	iX606460	TR	2SA1492 O,P,Y
#	Q531C	iX606470	TR	2SC3856 O,P,Y
	Q534	iA097000	TR	2SA970 GR,BL
	Q535	VP883100	TR	2SC1890A D,E
	Q536	VP883100	TR	2SC1890A D,E
	Q537	VP883100	TR	2SC1890A D,E
	Q538	iC174020	TR	2SC1740S R,S
	Q539	iC174020	TR	2SC1740S R,S
	Q701	VK432900	TR	2SD1915F S,T
	Q702	VK432900	TR	2SD1915F S,T
⚠	Q703	VP883000	TR	2SA893A D,E
⚠	Q704	VP883000	TR	2SA893A D,E
⚠	Q705	VP883000	TR	2SA893A D,E
⚠	Q706	VP883000	TR	2SA893A D,E
⚠	Q707	VP872700	TR	2SC4488 S,T
⚠	Q708	iC174020	TR	2SC1740S R,S
⚠	Q709	VP872600	TR	2SA1708 S,T
⚠	Q710	VR325600	TR	2SC2229 O,Y
⚠	Q711	VR325600	TR	2SC2229 O,Y
⚠	Q712	VP872600	TR	2SA1708 S,T
⚠	Q713	iC174020	TR	2SC1740S R,S
⚠	Q714	VP872700	TR	2SC4488 S,T
⚠	Q715A	iX633320	TR	2SA1693 O,P,Y
⚠	Q715C	iX633330	TR	2SC4466 O,P,Y
⚠	Q717A	iX633320	TR	2SA1693 O,P,Y
⚠	Q717C	iX633330	TR	2SC4466 O,P,Y
	Q719	VP883100	TR	2SC1890A D,E
	Q720	VP883100	TR	2SC1890A D,E
	Q721	iE000020	FET	2SK30ATM GR
	Q724	VK432900	TR	2SD1915F S,T
	Q725	iC174020	TR	2SC1740S R,S
	Q726	iC224030	TR	2SC2240 GR,BL
*	Q727	VV855300	TR	2SD856 Q,P
	Q728	iC174020	TR	2SC1740S R,S
	R508	HV456560	R.CAR.FP	5.6KΩ 1/4W
	R517	HV456100	R.CAR.FP	1KΩ 1/4W
	R531	HL315560	R.MTL.OXD	560Ω 1W
	R553	HL316560	R.MTL.OXD	5.6KΩ 1W
	R554	HL316560	R.MTL.OXD	5.6KΩ 1W
	R555	HV456270	R.CAR.FP	2.7KΩ 1/4W
	R557	HV455820	R.CAR.FP	820Ω 1/4W
	R558	VK189000	R.FUS	1KΩ 1/4W
	R559	HV454470	R.CAR.FP	47Ω 1/4W
	R560	HL314100	R.MTL.OXD	10Ω 1W
	R561	HL316560	R.MTL.OXD	5.6KΩ 1W

*New Parts

P.C.B. AMP

	Schm Ref.	PART NO.	Description	
	R562	HL316560	R.MTL.OXD	5.6KΩ 1W
	R563	HV456270	R.CAR.FP	2.7KΩ 1/4W
	R565	HV455820	R.CAR.FP	820Ω 1/4W
	R566	VK189000	R.FUS	1KΩ 1/4W
	R567	HV454470	R.CAR.FP	47Ω 1/4W
	R568	HL316560	R.MTL.OXD	5.6KΩ 1W
	R569	HL316560	R.MTL.OXD	5.6KΩ 1W
	R570	HV456270	R.CAR.FP	2.7KΩ 1/4W
	R572	HV455820	R.CAR.FP	820Ω 1/4W
	R573	VK189000	R.FUS	1KΩ 1/4W
	R574	HV454470	R.CAR.FP	47Ω 1/4W
	R580	HV453470	R.CAR.FP	4.7Ω 1/4W
	R581	VK188400	R.FUS	330Ω 1/4W
	R583	HV453470	R.CAR.FP	4.7Ω 1/4W
	R584	HV453470	R.CAR.FP	4.7Ω 1/4W
	R585	VK188400	R.FUS	330Ω 1/4W
	R587	HV453470	R.CAR.FP	4.7Ω 1/4W
	R588	HV453470	R.CAR.FP	4.7Ω 1/4W
	R589	VK188400	R.FUS	330Ω 1/4W
	R590	HZ003780	R.MTL.PLAT	0.22Ω+0.22 5W
	R591	HV453470	R.CAR.FP	4.7Ω 1/4W
	R598	HL314100	R.MTL.OXD	10Ω 1W
	R603	HL314100	R.MTL.OXD	10Ω 1W
	R609	HL314100	R.MTL.OXD	10Ω 1W
	R611	HV454100	R.CAR.FP	10Ω 1/4W
	R613	HV454100	R.CAR.FP	10Ω 1/4W
	R614	VP944500	R.MTL.OXD	390Ω 1W
	R615	VP944500	R.MTL.OXD	390Ω 1W
	R628	VY689500	R.WW	0.22Ω 3W
	R629	VY689500	R.WW	0.22Ω 3W
	R630	VY689500	R.WW	0.22Ω 3W
	R631	VY689500	R.WW	0.22Ω 3W
	R728	HV456270	R.CAR.FP	2.7KΩ 1/4W
⚠	R729	VK188400	R.FUS	330Ω 1/4W
	R731	HV456100	R.CAR.FP	1KΩ 1/4W
	R732	VK189000	R.FUS	1KΩ 1/4W
⚠	R733	HV454470	R.CAR.FP	47Ω 1/4W
⚠	R734	HL314470	R.MTL.OXD	47Ω 1W
⚠	R735	HV454470	R.CAR.FP	47Ω 1/4W
	R736	VK189000	R.FUS	1KΩ 1/4W
	R738	HV456100	R.CAR.FP	1KΩ 1/4W
⚠	R739	VK188400	R.FUS	330Ω 1/4W
	R740	HV456270	R.CAR.FP	2.7KΩ 1/4W
	R744	HV453470	R.CAR.FP	4.7Ω 1/4W
⚠	R745	VU981700	R.MTL.PLAT	0.22Ω+0.22 3W
	R746	HV453470	R.CAR.FP	4.7Ω 1/4W
	R747	HV453470	R.CAR.FP	4.7Ω 1/4W
⚠	R748	VU981700	R.MTL.PLAT	0.22Ω+0.22 3W
	R749	HV453470	R.CAR.FP	4.7Ω 1/4W
⚠	R754	HL314100	R.MTL.OXD	10Ω 1W
⚠	R755	HL314100	R.MTL.OXD	10Ω 1W
	R759	HV454100	R.CAR.FP	10Ω 1/4W
	R760	HV454100	R.CAR.FP	10Ω 1/4W

*New Parts

	Schm Ref.	PART NO.	Description	
	R763	HV454100	R.CAR.FP	10Ω 1/4W
	R764	HV453220	R.CAR.FP	2.2Ω 1/4W
	R765	HL315560	R.MTL.OXD	560Ω 1W
	R766	HL315560	R.MTL.OXD	560Ω 1W
	R800	HL313220	R.MTL.FLM	2.2Ω 1W
	RY501	VK438300	RELAY	DH24D2-OT/M2
	RY701	VK438300	RELAY	DH24D2-OT/M2
	RY702	VU566700	RELAY	DG24D2-OS/M
*	SW501	VV523900	SW.PUSH	PBS-YM-001
	SW502	VS602600	SW.SLIDE	SS070-P022 A(BG)
⚠*	SW701	VV523800	SW.SLIDE	SL13B-022-BMC1
⚠	SW702	VA961800	VOLT.SELCT	ESE-37247-F(R)
	TE501	VU819700	TERM.SP	8P(BG)
*	TE501	VV003100	TERM.SP	8P(R)
	TE701	VS578600	TERM.SP	8P
		VJ828000	PIN	IMSA-6024-03E
		BB071360	SCR.TERM	8.3x13
		VS606000	HEAT.SINK	DPS35-45
		EP630280	SCR.BND.HD	3x10 FCRM3-BL
		VY987200	DAMPER	HEATSINK RX-V692ML

*New Parts

■ EXPLODED VIEW

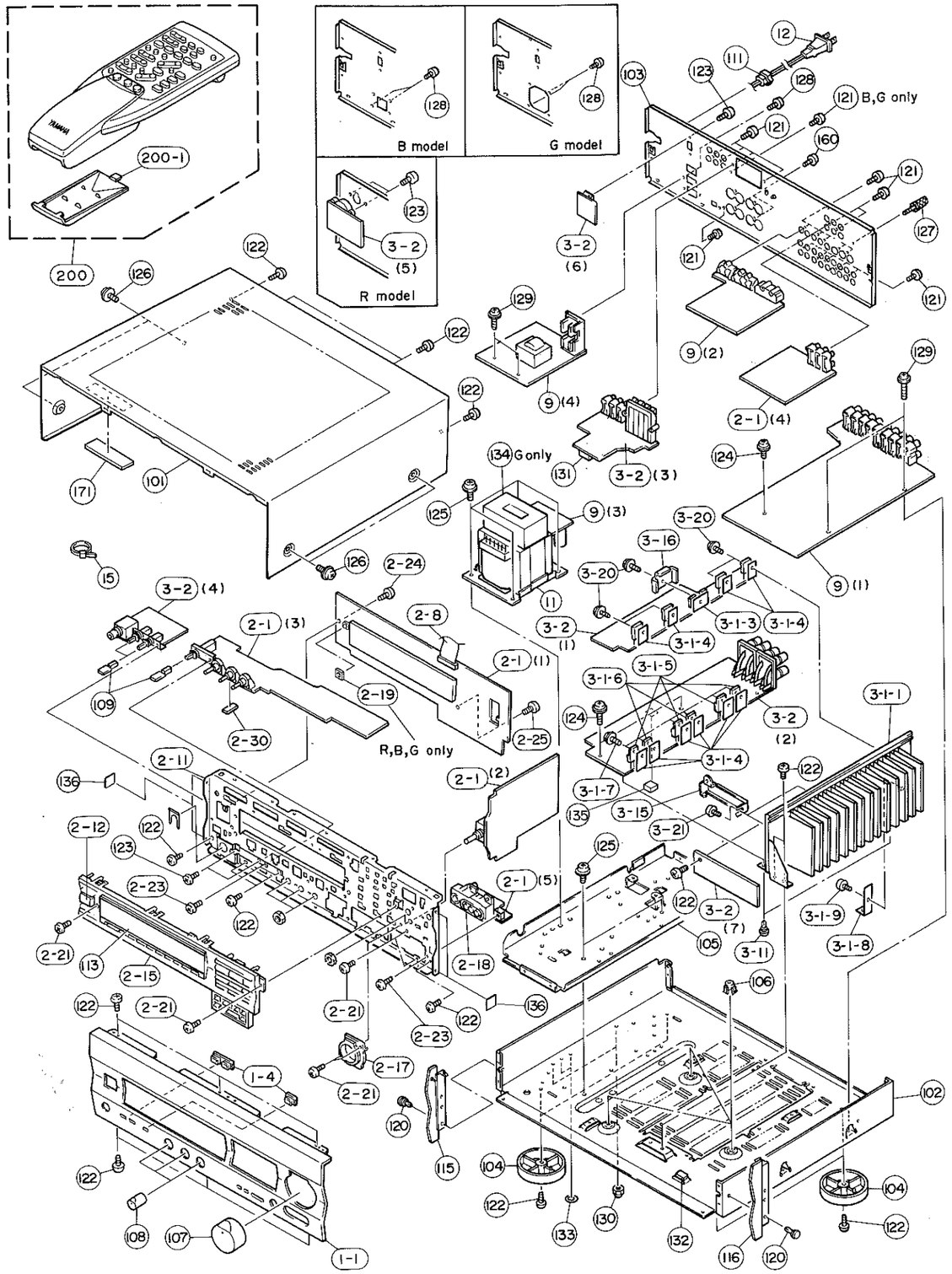

■ MECHANICAL PARTS

	Ref. No.	PART NO.	Description		Remarks	Markets
*	1- 1	VV142600	FRONT PANEL		BL	
*	1- 1	VV142700	FRONT PANEL		TI	
*	1- 4	VV123700	ESCUTCHEON, 3/8	2P	BL	
*	1- 4	VV123800	ESCUTCHEON, 3/8	2P	TI	
*	2- 1	VV575400	P.C.B. ASS'Y	OPERATION		(R)
*	2- 1	VV575500	P.C.B. ASS'Y	OPERATION		(BG)
*	2- 8	MF120400	FLEXIBLE FLAT CABLE C&C	20P 400mm		
*	2-11	VV140700	SUB CHASSIS	130		
*	2-12	VV136900	BUTTON CASE		BL	
*	2-12	VV137000	BUTTON CASE		TI	
*	2-15	VV309400	SUB PANEL CASE	9	BL	
*	2-15	VV309500	SUB PANEL CASE	9	TI	
*	2-17	VV149500	ESCUTCHEON, VOL		BL	
*	2-17	VV149600	ESCUTCHEON, VOL		TI	
*	2-18	VV149800	ESCUTCHEON, PJ		BL	
*	2-18	VV149900	ESCUTCHEON, PJ		TI	
	2-19	VU629200	DAMPER, LED	2x12x12		
	2-23	ED330066	BIND HEAD SCREW	3x6 FCRM3-BL		
	2-24	VT669300	PW HEAD B-TITE SCREW	3x8-8 MFC2		
	2-25	EP630220	BIND HEAD P-TITE SCREW	3x8 ZMC2-BL		
	2-30	VS699700	DAMPER	SIDE		
*	3-1-1	VV143000	HEAT SINK ASS'Y			
*	3-1-3	VV901800	RADIATION SHEET			
*	3-1-4	VV849300	RADIATION SHEET	BFG-20ADH-3 19X24		
	3-1-5	iX606460	TRANSISTOR	2SA1492 O,P,Y	Q523A, 527A, 531A	
	3-1-6	iX606470	TRANSISTOR	2SC3856 O,P,Y	Q523C, 527C, 531C	
	3-1-7	VK173200	SCREW, TRANSISTOR	3x15 SP FCM3		
*	3-1-8	VV518700	SUPPORT, HEAT SINK	L		
	3-1-9	Ei330086	BIND HEAD B-TITE SCREW	3x8 FCRM3-BL		
*	3-2	VV577200	P.C.B. ASS'Y	AMP		(R)
*	3-2	VV577400	P.C.B. ASS'Y	AMP		(BG)
	3-11	VQ368500	PUSH RIVET	P3545-B		
*	3-15	VV491300	SUPPORT, PCB			
*	3-16	VV901900	SUPPORT, TR			
	3-20	VK173200	SCREW, TRANSISTOR	3x15 SP FCM3		
	3-21	Ei330086	BIND HEAD B-TITE SCREW	3x8 FCRM3-BL		
*	9	VV575100	P.C.B. ASS'Y	INPUT	TI	(G)
*	9	VV819500	P.C.B. ASS'Y	INPUT		(R)
*	9	VV953100	P.C.B. ASS'Y	INPUT		(B)
*	9	VV953200	P.C.B. ASS'Y	INPUT	BL	(G)
△*	11	XS865A00	POWER TRANSFORMER			(R)
△*	11	XS867A00	POWER TRANSFORMER			(BG)
△	12	VL238100	POWER CORD ASS'Y			(R)
△*	12	VN363700	POWER CORD ASS'Y			(G)
△*	12	VV437300	POWER CORD ASS'Y			(B)
	15	VU590000	BINDING TIE	CBTD001B		
*	101	VV121300	TOP COVER		BL	
*	101	VV121500	TOP COVER		TI	
	102	VS001400	CHASSIS			
*	103	VV148000	REAR PANEL			(R)
*	103	VV148100	REAR PANEL			(B)
*	103	VV148200	REAR PANEL			(G)
	104	VS025000	LEG	D60xH21		

* New Parts

	Ref. No.	PART NO.	Description			Remarks	Markets
*	105	VV123100	FRAME, TRANS				
	106	VR264400	SPACER	H8			
*	107	VV268800	KNOB	D40		BL	
*	107	VV268900	KNOB	D40		TI	
*	108	VV311000	KNOB	D14		BL	
	108	VV311400	KNOB	D14		TI	
*	109	VV123500	BUTTON, 3/8			BL	
*	109	VV123600	BUTTON, 3/8			TI	
	111	VN158600	CORD STOPPER	No.2104			
*	113	VV139600	SHEET, WINDOW				(R)
*	113	VV139800	SHEET, WINDOW				(BG)
*	115	VV124300	PLATE SIDE L	130		BL	
*	115	VV124400	PLATE SIDE L	130		TI	
*	116	VV124500	PLATE SIDE R	130		BL	
*	116	VV124600	PLATE SIDE R	130		TI	
	120	VQ368600	PUSH RIVET	P3555-B			
	121	VN413300	BIND HEAD BONDING B-T. SCREW	3x8	MFZN2-BL		
	122	Ei330086	BIND HEAD B-TITE SCREW	3x8	FCRM3-BL		
	123	ED330066	BIND HEAD SCREW	3x6	FCRM3-BL		
	124	VT669400	PW HEAD B-TITE SCREW	3x15-8	MFC2		
	125	EK365090	PW HEAD S-TITE SCREW	4x8-10	FCRM3-BL		
	126	EK365090	PW HEAD S-TITE SCREW	4x8-10	FCRM3-BL		
	127	AA627310	GROUND TERMINAL				
	128	Ei030086	BIND HEAD B-TITE SCREW	3x8	ZMC2-Y		
	129	VT669300	PW HEAD B-TITE SCREW	3x8-8	MFC2		
	130	VK002600	HEXAGONAL CAP NUT	4mm			
	131	VS758000	DAMPER, T5				
	132	VS936800	DAMPER	3x5x10			
	133	VU984400	RING	D14			
	134	VY731300	DAMPER	TRANS			(G)
	135	VQ366100	DAMPER, PCB				
	136	VY989400	DAMPER	SIDE			
	160	VY731200	BONDING HEAD TAPPING SCREW	3x10	MFNI33		
	161	VZ047200	DAMPER	TOP			
	171	VV050400	SPACER				
			ACCESSORIES				
*	200	VV486400	REMOTE CONTROL TRANSMITTER	SBGH20020A RAV4			
	200-1	CX679050	LID	74x34BLALPS			
			BATTERY, MANGANESE	SUM-3, AA, R06			

* New Parts

REMOTE CONTROL TRANSMITTER

■ SCHEMATIC DIAGRAM

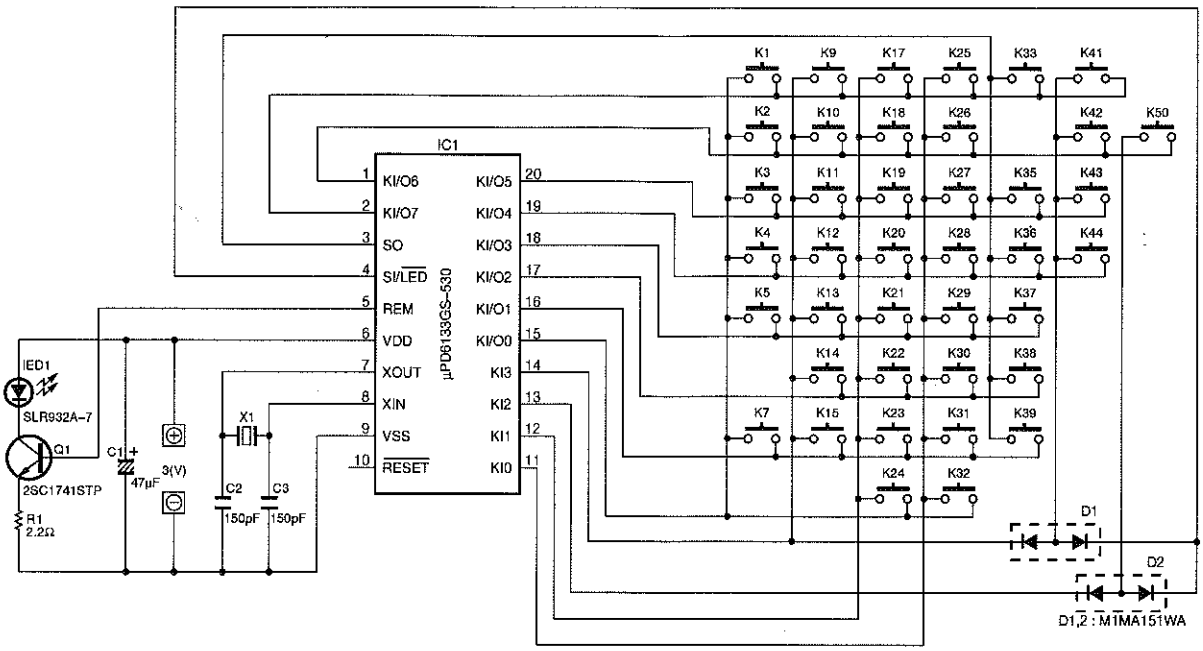

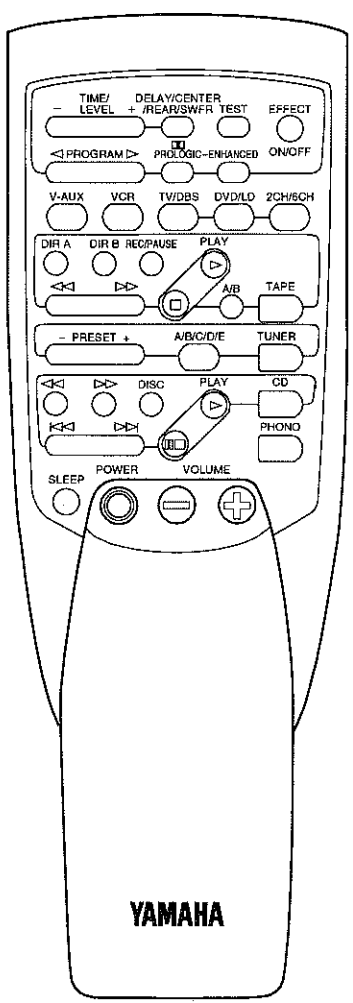

Key No.	FUNCTION	CUSTOM (BIN)	DATA (HEX)
1	EFFECT ON/OFF	7A	56
2	PROGRAM ◁	7A	59
3	PROGRAM ▷	7A	58
4	DD PROLOGIC	7A	88
5	ENHANCED	7A	89
7	V-AUX	7A	55
9	VCR	7A	0F
10	TV/DBS	7A	54
11	DVD/LD	7A	17
12	DIR A	7A	07
13	DIR B	7A	40
14	REC/PAUSE	7A	04
15	PLAY (TAPE)	7A	00
17	◁◁ (TAPE)	7A	01
18	▷▷ (TAPE)	7A	02
19	□ (TAPE)	7A	03
20	DECK A/B	7A	06
21	TAPE	7A	18
22	PRESET –	7A	11
23	PRESET +	7A	10
24	A/B/C/D/E	7A	12
25	TUNER	7A	16
26	◁◁ (CD)	7A	0D
27	▷▷ (CD)	7A	0C
28	DISC	7A	4F
29	PLAY (CD)	7A	08
30	CD	7A	15
31	⏮ (CD)	7A	0B
32	⏭ (CD)	7A	0A
33	DD/□	7A	09
35	PHONO	7A	14
36	SLEEP	7A	57
37	POWER	7A	1F
38	VOLUME –	7A	1B
39	VOLUME +	7A	1A
		7A	1C
41	TIME/LEVEL –	7A	53
42	TIME/LEVEL +	7A	52
43	DELAY/CENTER/REAR/SWFR	7A	86
44	TEST	7A	85
50	2CH/6CH	7A	87

Parts List for Carbon Resistors

Value	1/4W Type Part No.	1/6W Type Part No.	Value	1/4W Type Part No.	1/6W Type Part No.
1.0 Ω	HJ35 3100	HF85 3100	10 kΩ	HF45 7100	HF45 7100
1.8 Ω	HJ35 3180	✻	11 kΩ	HF45 7110	HF45 7110
2.2 Ω	HJ35 3220	HF85 3220	12 kΩ	HJ35 7120	HF85 7120
3.3 Ω	HJ35 3330	HF85 3330	13 kΩ	HF45 7130	HF45 7130
4.7 Ω	HJ35 3470	HF85 3470	15 kΩ	HF45 7150	HF45 7150
5.6 Ω	HJ35 3560	HF85 3560	18 kΩ	HF45 7180	HF45 7180
10 Ω	HF45 4100	HF45 4100	22 kΩ	HF45 7220	HF45 7220
15 Ω	HJ35 4150	HF85 4150	24 kΩ	HF45 7240	HF45 7240
22 Ω	HF45 4220	HF45 4220	27 kΩ	HJ35 7270	HF85 7270
27 Ω	HJ35 4270	HF85 4270	30 kΩ	HF45 7300	HF45 7300
33 Ω	HF45 4330	HF45 4330	33 kΩ	HF45 7330	HF45 7330
39 Ω	HJ35 4470	HF85 4390	36 kΩ	HF45 7360	HF45 7360
47 Ω	HF45 4470	HF45 4470	39 kΩ	HF45 7390	HF45 7390
56 Ω	HF45 4560	HF45 4560	47 kΩ	HF45 7470	HF45 7470
68 Ω	HF45 4680	HF45 4680	51 kΩ	HF45 7510	HF45 7510
75 Ω	HF45 4750	HF45 4750	56 kΩ	HF45 7560	HF45 7560
82 Ω	HF45 4820	HF45 4820	62 kΩ	HF45 7620	HF45 7620
91 Ω	HF45 4910	HF45 4910	68 kΩ	HF45 7680	HF45 7680
100 Ω	HF45 5100	HF45 5100	82 kΩ	HF45 7820	HF45 7820
110 Ω	HJ35 5110	HF85 5110	91 kΩ	HF45 7910	HF45 7910
120 Ω	HF45 5120	HF45 5120	100 kΩ	HF45 8100	HF45 8100
150 Ω	HF45 5150	HF45 5150	110 kΩ	HF45 8110	HF45 8110
160 Ω	HJ35 5160	✻	120 kΩ	HF45 8120	HF45 8120
180 Ω	HF45 5180	HF45 5180	150 kΩ	HF45 8150	HF45 8150
200 Ω	HF45 5200	HF45 5200	180 kΩ	HF45 8180	HF45 8180
220 Ω	HF45 5220	HF45 5220	220 kΩ	HJ35 8220	HF85 8220
270 Ω	HF45 5270	HF45 5270	270 kΩ	HF45 8270	HF45 8270
330 Ω	HF45 5330	HF45 5330	300 kΩ	HF45 8300	HF45 8300
390 Ω	HF45 5390	HF45 5390	330 kΩ	HF45 8330	HF45 8330
430 Ω	HF45 5430	HF45 5430	390 kΩ	HJ35 8390	HF85 8390
470 Ω	HF45 5470	HF45 5470	470 kΩ	HF45 8470	HF45 8470
510 Ω	HF45 5510	HF45 5510	560 kΩ	HJ35 8560	HF85 8560
560 Ω	HF45 5560	HF45 5560	680 kΩ	HJ35 8680	HF85 8680
680 Ω	HF45 5680	HF45 5680	820 kΩ	HJ35 8820	HF85 8820
820 Ω	HF45 5820	HF45 5820	1.0 MΩ	HF45 9100	HF45 9100
910 Ω	HF45 5910	HF45 5910	1.2 MΩ	HJ35 9120	✻
1.0 kΩ	HF45 6100	HF45 6100	1.5 MΩ	HJ35 9150	HF85 9150
1.2 kΩ	HF45 6120	HF45 6120	1.8 MΩ	HJ35 9180	HF85 9180
1.5 kΩ	HF45 6150	HF45 6150	2.2 MΩ	HJ35 9220	HF85 9220
1.8 kΩ	HF45 6180	HF45 6180	3.3 MΩ	HJ35 9330	HF85 9330
2.0 kΩ	HJ35 6200	HF85 6200	3.9 MΩ	HJ35 9390	✻
2.2 kΩ	HF45 6220	HF45 6220	4.7 MΩ	HJ35 9470	HF85 9470
2.4 kΩ	HJ35 6240	HF85 6240			
2.7 kΩ	HF45 6270	HF45 6270			
3.0 kΩ	HF45 6300	HF45 6300			
3.3 kΩ	HF45 6330	HF45 6330			
3.6 kΩ	HJ35 6360	HF85 6360			
3.9 kΩ	HF45 6390	HF45 6390			
4.7 kΩ	HF45 6470	HF45 6470			
5.1 kΩ	HF45 6510	HF45 6510			
5.6 kΩ	HF45 6560	HF45 6560			
6.8 kΩ	HF45 6680	HF45 6680			
8.2 kΩ	HF45 6820	HF45 6820			
9.1 kΩ	HF45 6910	HF45 6910			

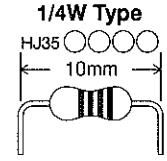

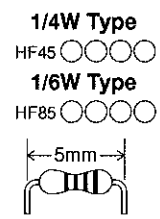

1992

DSP-A592

YAMAHA