DVD PLAYER

DVD-C740/DV-C6660

SERVICE MANUAL

IMPORTANT NOTICE

This manual has been provided for the use of authorized YAMAHA Retailers and their service personnel.
It has been assumed that basic service procedures inherent to the industry, and more specifically YAMAHA Products, are already known and understood by the users, and have therefore not been restated.

WARNING: Failure to follow appropriate service and safety procedures when servicing this product may result in personal injury, destruction of expensive components, and failure of the product to perform as specified. For these reasons, we advise all YAMAHA product owners that any service required should be performed by an authorized YAMAHA Retailer or the appointed service representative.

IMPORTANT: The presentation or sale of this manual to any individual or firm does not constitute authorization, certification or recognition of any applicable technical capabilities, or establish a principle-agent relationship of any form.

The data provided is believed to be accurate and applicable to the unit(s) indicated on the cover. The research, engineering, and service departments of YAMAHA are continually striving to improve YAMAHA products. Modifications are, therefore, inevitable and specifications are subject to change without notice or obligation to retrofit. Should any discrepancy appear to exist, please contact the distributor's Service Division.

WARNING: Static discharges can destroy expensive components. Discharge any static electricity your body may have accumulated by grounding yourself to the ground buss in the unit (heavy gauge black wires connect to this buss).

IMPORTANT: Turn the unit OFF during disassembly and part replacement. Recheck all work before you apply power to the unit.

DVD-C740 /DV-C6660

■ CONTENTS

TO SERVICE PERSONNEL 2–3
PREVENTION OF ELECTROSTATIC DISCHARGE ... 4
LOCALE MANAGEMENT INFORMATION 4
FRONT PANELS 5
REAR PANELS 6
SPECIFICATIONS 7
DIMENSIONS 8
INTERNAL VIEW 8
DISASSEMBLY PROCEDURES 9–10
DIAGNOSTIC SOFTWARE 11–19
IC DATA 20–25
BLOCK DIAGRAM 27
PRINTED CIRCUIT BOARD 28–36
SCHEMATIC DIAGRAM 37–54
PARTS LIST 54–62

このサービスマニュアルは、エコマーク認定の再生紙を使用しています。
This Service Manual uses recycled paper.

100827

YAMAHA
YAMAHA CORPORATION
P.O.Box 1, Hamamatsu, Japan

■ TO SERVICE PERSONNEL

1. Critical Components Information
   Components having special characteristics are marked ⚠ and must be replaced with parts having specifications equal to those originally installed.

2. Leakage Current Measurement (For 120V Models Only)
   When service has been completed, it is imperative to verify that all exposed conductive surfaces are properly insulated from supply circuits.

- Meter impedance should be equivalent to 1500 ohm shunted by 0.15µF.
- Leakage current must not exceed 0.5mA.
- Be sure to test for leakage with the AC plug in both polarities.

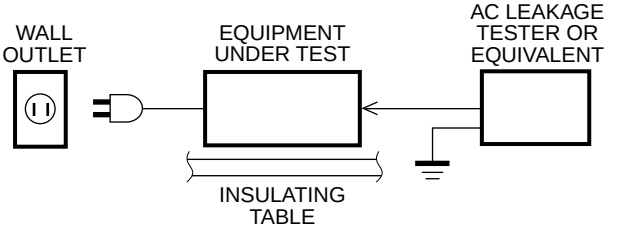

THE DVD AUDIO/VIDEO PLAYER SHOULD NOT BE ADJUSTED OR REPAIRED BY ANYONE EXCEPT PROPERLY QUALIFIED SERVICE PERSONNEL.

WARNING: CHEMICAL CONTENT NOTICE!

The solder used in the production of this product contains LEAD. In addition, other electrical/electronic and/or plastic (where applicable) components may also contain traces of chemicals found by the California Health and Welfare Agency (and possibly other entities) to cause cancer and/or birth defects or other reproductive harm.

DO NOT PLACE SOLDER, ELECTRICAL/ELECTRONIC OR PLASTIC COMPONENTS IN YOUR MOUTH FOR ANY REASON WHATSOEVER!

Avoid prolonged, unprotected contact between solder and your skin! When soldering, do not inhale solder fumes or expose eyes to solder/flux vapor!

If you come in contact with solder or components located inside the enclosure of this product, wash your hands before handling food.

WARNING: Laser Safety

This product contains a laser beam component. This component may emit invisible, as well as visible radiation, which may cause eye damage. To protect your eyes and skin from laser radiation, the following precautions must be used during servicing of the unit.

1) When testing and/or repairing any component within the product, keep your eyes and skin more than 30 cm away from the laser pick-up unit at all times. Do not stare at the laser beam at any time.

2) Do not attempt to readjust, disassemble or repair the laser pick-up, unless noted elsewhere in this manual.

3) CAUTION : Use of controls, adjustments or performance of procedures other than those specified herein may result in hazardous radiation exposure.

Laser Emitting conditions:

1) When the Top Cover is removed, and the STANDBY/ON SW is turned to the "ON" position, the laser component will emit a beam for several seconds to detect if a disc is present. During this time (5-10 sec.) the laser may radiate through the lens of the laser pick-up unit. Do not attempt any servicing during this period!
   If no disc is detected, the laser will stop emitting the beam. When a disc is loaded, you will not be exposed to any laser emissions.

2) The laser power level can be adjusted with the VR on the pick-up PWB, however, this level has been set by the factory prior to shipping from the factory. Do not adjust this laser level control unless instruction is provided elsewhere in this manual. Adjustment of this control can increase the laser emission level from the device.

Laser Diode Properties

Type:	Semiconductor laser GaAlAs
Wave length:	650 nm (DVD)
	780 nm (VCD/CD)
Output Power:	0.8 mW (DVD)
	0.3 mW (VCD/CD)
Beam divergence:	60 degree

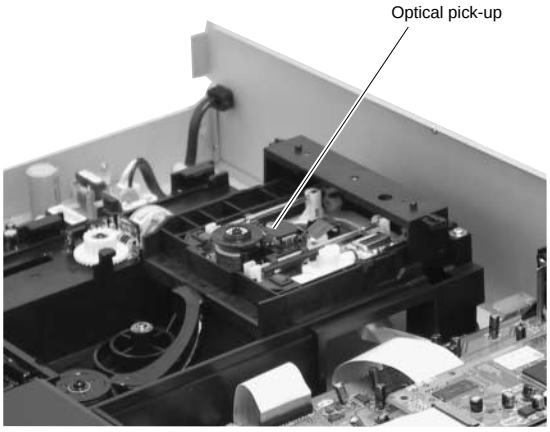

VARO! : AVATTAESSA JA SUOJALUKITUS OHITETTAESSA OLET ALTTIINA NÄKYMÄTTÖMÄLLE LASER-SÄTEILYLLE. ÄLÄ KATSO SÄTEESEEN.

VARNING! : OSYNLIG LASERSTRÅLNING NÄR DENNA DEL ÄR ÖPPNAD OCH SPÄRREN ÄR URKOPPLAD. BETRAKTA EJ STRÅLEN.

■ PREVENTION OF ELECTROSTATIC DISCHARGE

The laser diode in the traverse unit (optical pickup) may be damaged due to static electricity from clothes or the human body. Use caution to prevent electrostatic damage when servicing or handling the laser diode.

1. Grounding for electrostatic damage prevention

1. Worktable grounding
   Put a grounded conductive material (sheet) or iron sheet on the area where the optical pickup is placed.

2. Human body grounding
   Use an anti-static wrist strap to discharge the static electricity from your body.

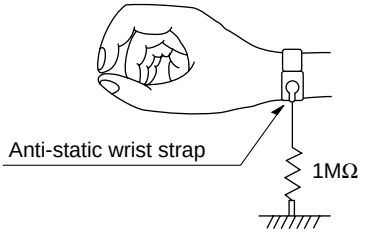

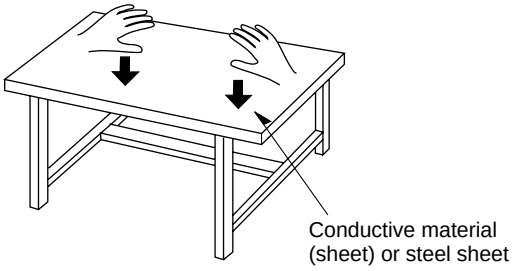

2. Handling of the optical pickup

1. To prevent damage to the optical pickup replacement parts during transportation and before installation, both ends of the laser diode are short-circuited. After installing the new part, remove the short circuit according to the correct procedure in this service manual.
2. Do not use a tester to check the laser diode in the optical pickup. The power supply in the tester will damage the laser diode.

3. Handling Precautions for the Traverse Unit (Optical Pickup)

1. Handle the traverse unit (optical pickup) gently, as it is an extremely high-precision assembly.
2. The flexible cable lines may break if an excessive force is applied to it. Use caution when handling the cable.
3. The semi-fixed resistor for laser power adjustment should not be adjusted. Do not turn the resistor.

■ LOCALE MANAGEMENT INFORMATION

Locale Management Information : This DVD player is designed and manufactured to respond to the Locale Management Information that is recorded on a DVD disc. If the Locale number described on the DVD disc does not correspond to the Locale number of this DVD player, this DVD player cannot play this disc.

This product incorporates copyright protection technology that is protected by method claims of certain U.S. patents and other intellectual property rights owned by Macrovision Corporation and other rights owners. Use of this copyright protection technology must be authorized by Macrovision Corporation, and is intended for home and other limited viewing uses only unless otherwise authorized by Macrovision Corporation. Reverse engineering or disassembly is prohibited.

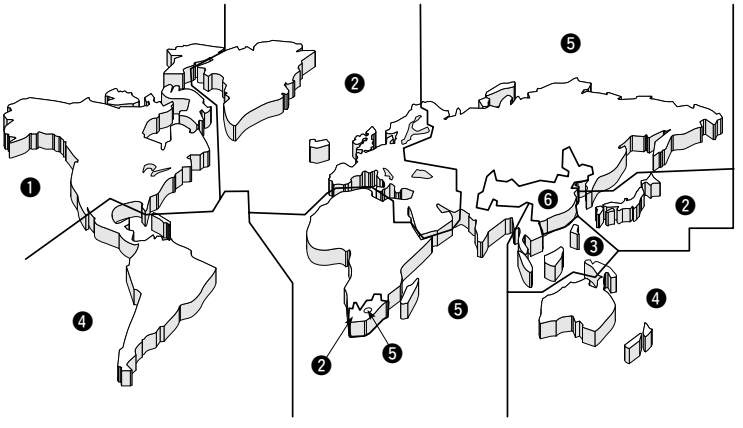

■ FRONT PANELS

▼ DVD-C740 (U, A models)

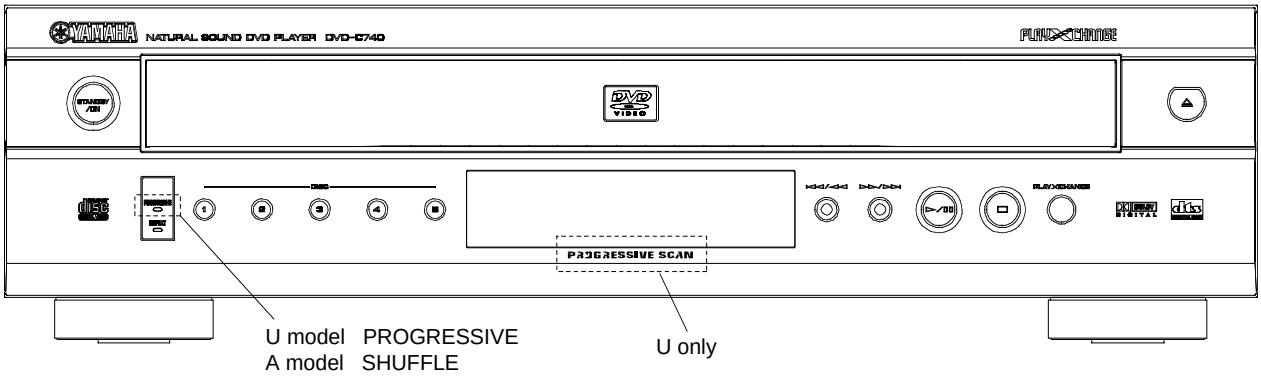

▼ DV-C6660 (U, A models)

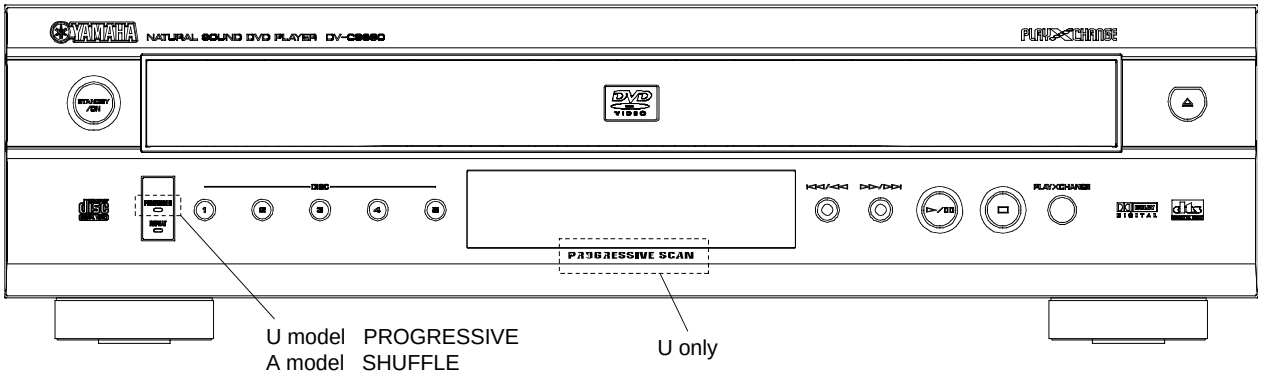

● DVD-C740/DV-C6660

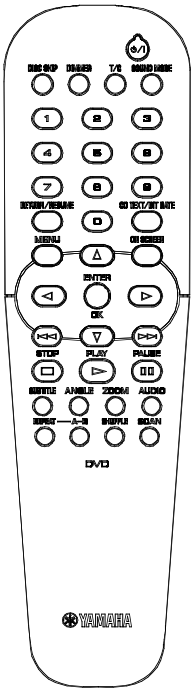

■ REAR PANELS

▼ DVD-C740 U model

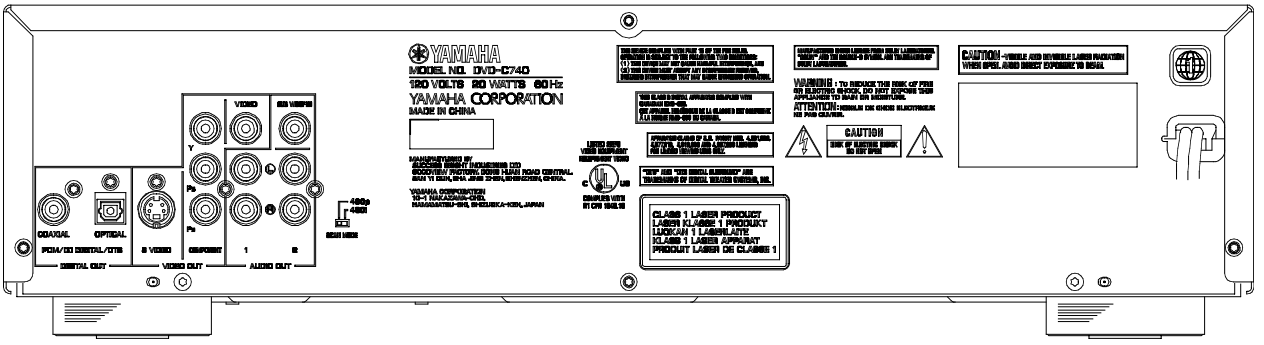

▼ DVD-C740 A model

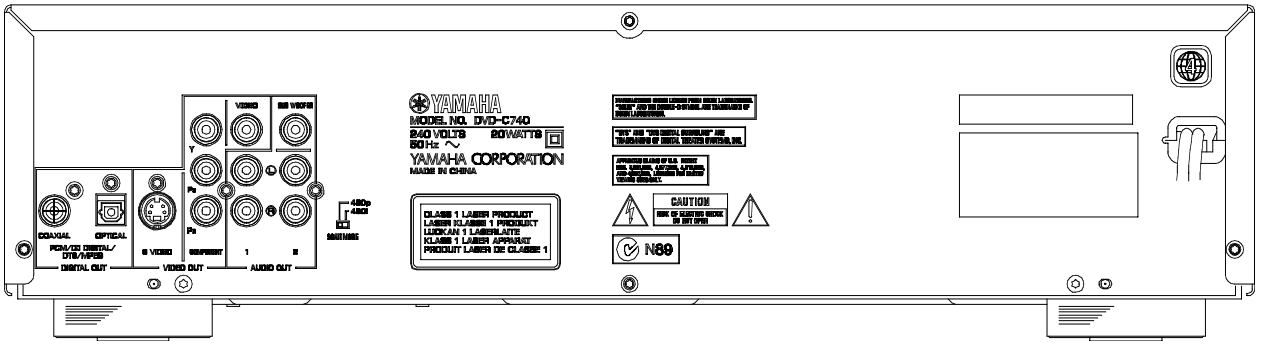

▼ DV-C6660 U model

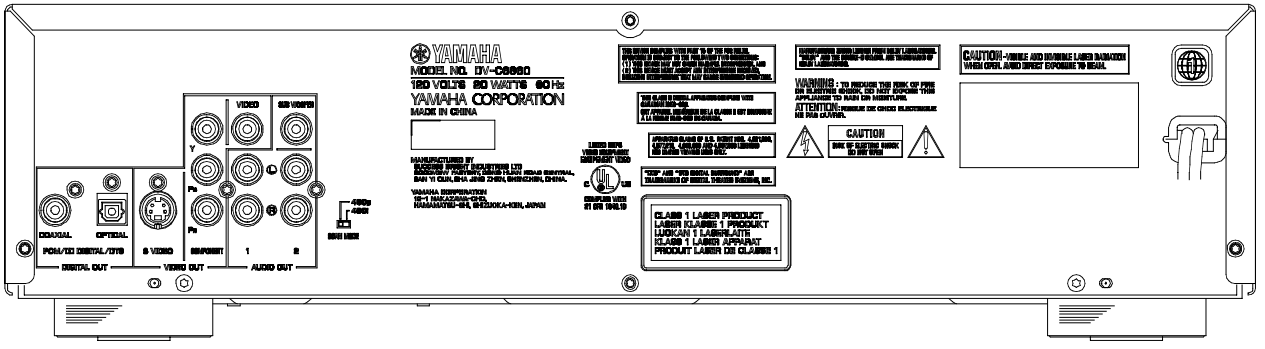

▼ DV-C6660 A model

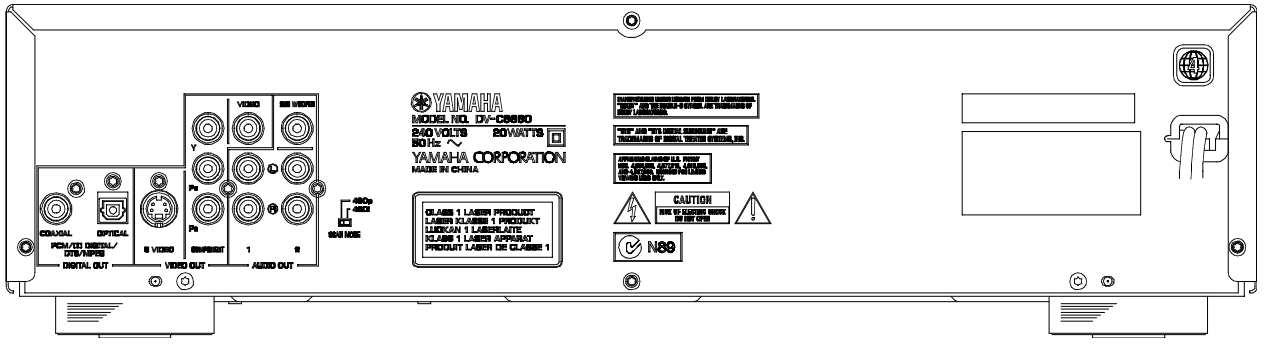

■ SPECIFICATIONS

PLAYBACK SYSTEM

DVD Video
DVD+RW
DVD+R
Video CD and SVCD
CD (CD-R and CD-RW)
MP3 CD

TV STANDARD (PAL/50Hz) (NTSC/60Hz)

Number of lines	625	525
Playback	Multistandard	(PAL/NTSC)

VIDEO PERFORMANCE

Component Video output	Y: 1Vpp into 75 ohm
	Pr/Cr Pb/Cb: 0.7Vpp into 75 ohm
S-Video output	Y: 1Vpp into 75 ohm
	C: 0.3Vpp into 75 ohm
Video output	1 Vpp into 75 ohm
Black Level Shift	On/Off
Video Shift	Left/Right

AUDIO FORMAT

Dolby Digital/ DTS/MPEG	Compressed Digital
PCM	16, 20, 24 bits
	fs, 44.1, 48, 96 kHz
MP3	96, 112, 128, 256 kbps and
(Joliet)	variable bit rate fs 32, 44.1, 48kHz

Full decoding of Dolby Digital and DTS multi channel sound
Analog Stereo Sound
Dolby Surround-compatible downmix from Dolby Digital multi-channel sound
3D Sound for virtual 5.1 channel sound on 2 speakers

AUDIO PERFORMANCE

DA Converter	24 bits	
DVD	fs 96 kHz	2 Hz - 44 kHz
CD/Video CD	fs 44.1 kHz	2 Hz - 20 kHz
S-Video CD	fs 48 kHz	2 Hz - 22 kHz
	fs 44.1 kHz	2 Hz - 20 kHz
Signal-Noise (1kHz)		105 dB
Dynamic Range (1kHz)		100 dB
Harmonic Distortion + Noise (1kHz)		0.003%
MPEG MP3		MPEG Audio L3

CONNECTIONS

Y Pb/Cb Pr/Cr (480i/p)	Cinch 3x (green, blue, red)
S-Video Output	Mini DIN, 4 pins
Video Output	Cinch (yellow)
Audio L+R output	Cinch (white/red) x2
Subwoofer output	Cinch (black)
Digital Output	1 coaxial, 1 optical
	IEC958 for CDDA / LPCM
	IEC1937 for MPEG1/2, Dolby Digital, DTS

CABINET

Dimensions (w x h x d)	435 x 116 x 425 mm
	(17-1/8" x 4-9/16" x 16-3/4")
Weight	Approx. 6 Kg (13 lbs 3 oz)

POWER SUPPLY

Power input	U.S.A. model	120V, 60Hz
	Australia model	240V, 50Hz
Power usage		Approx. 20W
Power usage standby		< 5W

Finish

DVD-C740	Black Color (U, A models)
DV-C6660	Black Color (U, A models)
	Silver Color (U, A models)

Accessories

Remote Control, Batteries, Audio/Video Cable

* typical playing time for movie with 2 spoken languages and 3 subtitle languages

Specifications subject to change without prior notice.

U ..... USA model
A ..... Australian model

Manufactured under license from Dolby Laboratories.
"Dolby" and the double-D symbol are trademarks of Dolby Laboratories.

"DTS" and "DTS Digital Out" are trademarks of Digital Theater Systems, Inc.

"DCDi" is a trademark of Faroudia, a division of Sage Inc.

■ DIMENSIONS

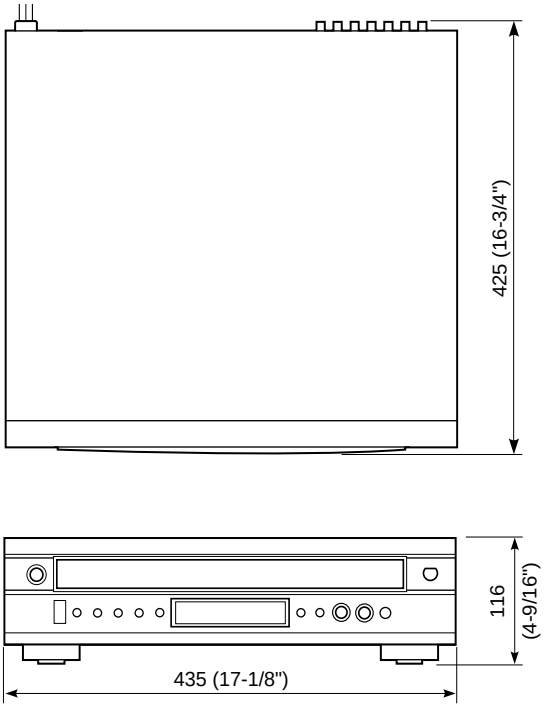

Unit : mm (inch)

■ INTERNAL VIEW

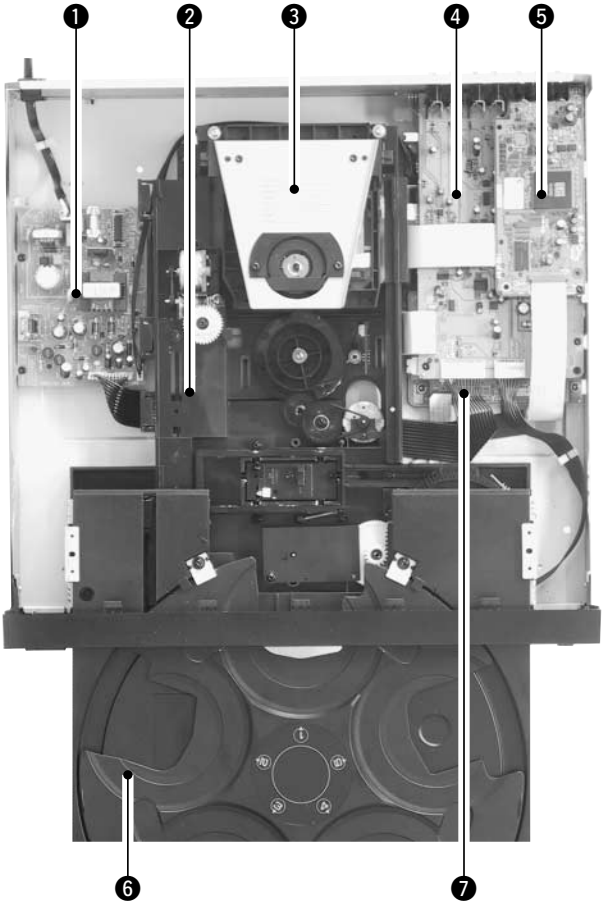

❶ POWER SUPPLY UNIT
❷ CM UNIT
❸ CLAMPER ASS'Y
❹ AV P.C.B.
❺ Not applied to these models
❻ TRAY ASS'Y
❼ MONOBOARD P.C.B.

■ DISASSEMBLY PROCEDURES

See exploded view for item numbers

Mounting
↕
Dismounting

Top Cover 300
- Remove 4 screws 310 and 3 screws 305
- Lift top cover from rear side to remove.

Front Panel 0001
- Remove cable connection.
- Unlock Front panel from frame by releasing successively 4 snaps. (2 on the side and bottom)
- Place Front panel in front of the set (service position).

Front Display board 2000 (1)
- Remove 8 screws 100. (Board to Front cabinet)
- Remove cable connections.
- Dismount board.

Front Eject board 2000 (2)
- Remove 3 screws 115. (Board to Front cabinet)
- Remove cable connection.
- Dismount board.

Front Standby board 2000 (3)
- Remove 2 screws 110. (Board to Front cabinet)
- Remove cable connection.
- Dismount board.

Tray Ass'y
- Removes stopper screw 10 on the Tray.
- Open Tray (See instruction for manual eject of tray)
- Gently pull the tray out.

Clamper Ass'y 0004
- Remove 2 screws 12. (Clamper to CM unit)
- Dismount clamper ass'y.

Holder/VAM Ass'y
- Remove 2 screws 11. (Holder/VAM Ass'y to CM unit)
- Dismount holder/VAM ass'y.

CM Unit
- Remove AV board 1001 and Monobaord 1020.
- Remove 5 screws 150. (CM module to bottom frame)
- Dismount CM unit

Motor driver board 1021
- Flip the CM unit.
- Release 3 catches.
- Remove cable connections
- Dismount board.

A/V board 1001
- Remove flex and cable connections.
- Remove 4 screws 275 (skt cinch ,optical to back-plate) and screw 280. (S-video to back-plate)
- Release 2 screw 190. (board to bracket)
- Dismount board.

Monoboard 1020
- Remove flex and cable connections from Changer module to Monoboard.
- Remove 4 screws 200.
- Dismount Monoboard.

Power supply unit 1005
- Remove cable connections.
- Remove 2 screws 185. (Board to bottom frame)
- Release spacer locking. (Board to bottom frame)
- Dismount board.

When disassembling, use the special screw driver with tip shape in figure.

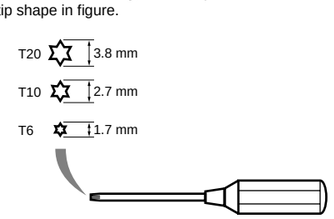

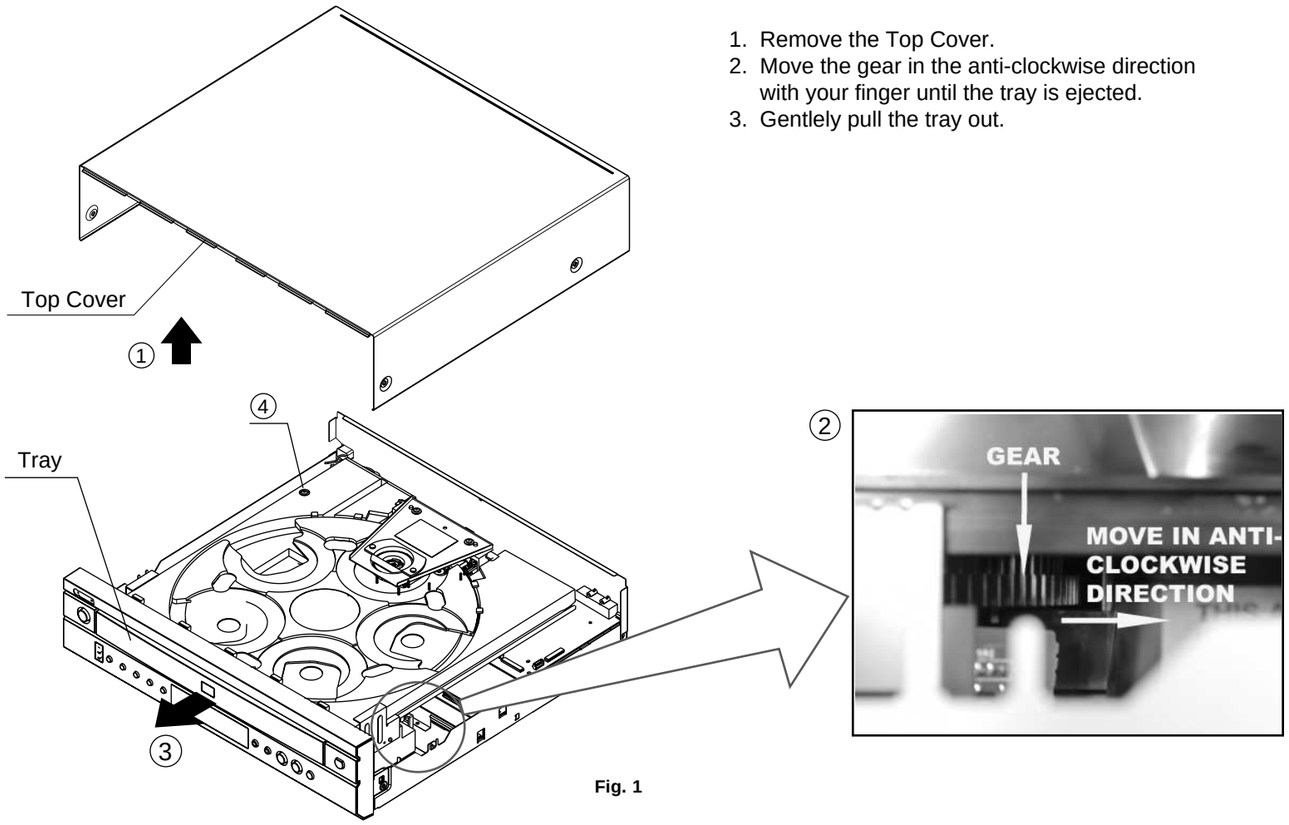

Fig. 1

HOW TO MANUALLY EJECT THE TRAY

1. Remove the Top Cover.
2. Move the gear in the anti-clockwise direction with your finger until the tray is ejected.
3. Gentlely pull the tray out.

1. Removal of Tray Ass'y

a. Remove 1 screw (④) in Fig. 1.

b. Turn Gear/L0 as shown in Fig. 2 counter clockwise gradually until immediately before the tray starts to move and stop it there.

CAUTION: Gear/L0, if turned counter clockwise continuously, will mesh with the gear of the tray and the tray will come out. When removing the tray, use care so that Gear/L0 will not mesh with the gear of the tray.

c. Pull out the Tray Ass'y.

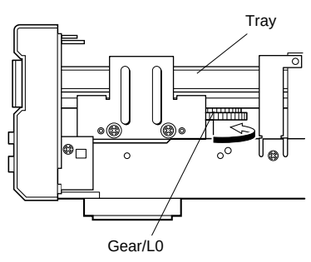

Fig. 2

● **Precaution for installation of the Tray Ass'y.**
On Tray Ass'y setting.
Check the Direction of marking "▲" on gear according to this drawing.

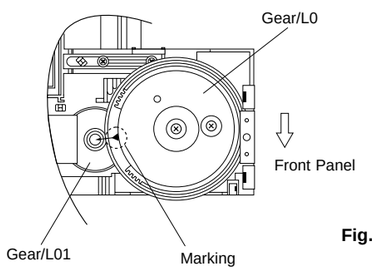

Fig. A

2. Removal of Table

a. Remove 2 screws (⑤) and then remove the Support/M in Fig. 3.

b. Remove the Plate/Table in Fig. 3.

c. Remove 1 screw (⑥) and then take off the Table in Fig. 3.

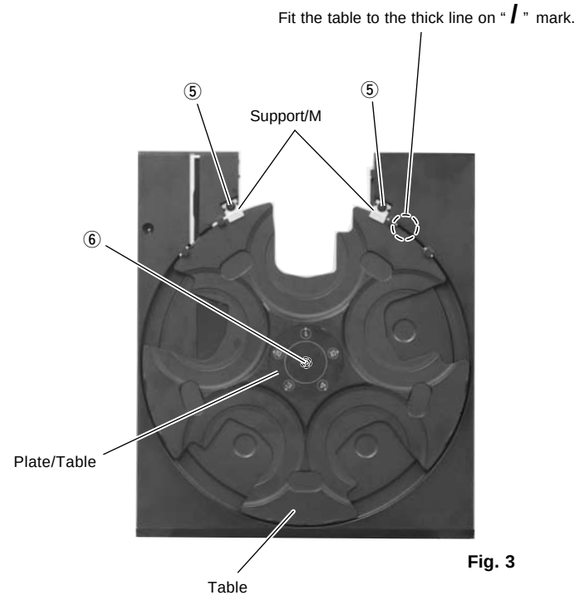

Fig. 3

IMPORTANT: Installation of Table.

Install the table according to the following procedure.

1) Slide the Lever so that the Gear/RT becomes free. (Fig.B)
2) With the "▲" mark on the Gear/RT aligned with the same mark on the Tray, lock it with the Lever. (Fig.B)
3) Install the Table by aligning it to the thick line on " / " mark. (Fig.3)

*Check that the Table is locked after installation.

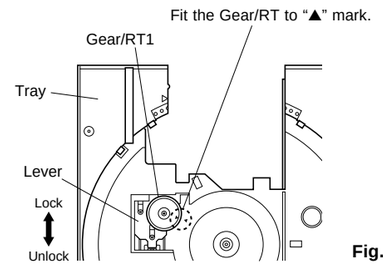

Fig. B

■ DIAGNOSTIC SOFTWARE

1 Dealerscript

1.1 Purpose of Dealer Script

The dealer script can give a diagnosis on a standalone DVD player, no other equipment is needed to perform a number of hardware tests to check if the DVD player is faulty. The diagnosis is simply an "error" or "pass" message. No indication is given of faulty hardware modules. Only tests within the scope of the diagnostic software will be executed hence only faults within this scope can be detected.

1.2 Contents of Dealer Script

The dealer script executes all diagnostic nuclei that do not need any user interaction and are meaningful on a standalone DVD player.
The nuclei called in the dealer script are the following (the number after each nucleus name corresponds with the number being on the local display when the nucleus is executed during the dealer script):

Nucleus

Display Countdown	Nucleus Number	Nucleus Name	Description
9	6	PapChksFl	Calculate and verify checksum of FLASH memory
8	12	PapI2cDisp	Checks the I2C interface with the slave processor on the Display board
7	92c	ChangerI2cExp	Checks the I2C interface with the IO expander on the Buffer board
6	29a	PapI2cLedExp	Checks the I2C interface with the IO expander on the Display board
5	13	PapS2bEcho	Checks the I2C interface to the basic engine
4	11	PapI2cNvram	Checks the I2C interface to the basic engine
3	15	PapNvramWrR	Pattern test of all locations in the NVRAM
2	16	CompSdramWrR	Pattern test of all locations in the SDRAM(s)
1	63	FURORERSdramWrRLow	Pattern test of all locations in the SDRAM(s)

Figure 1 Dealer script nuclei

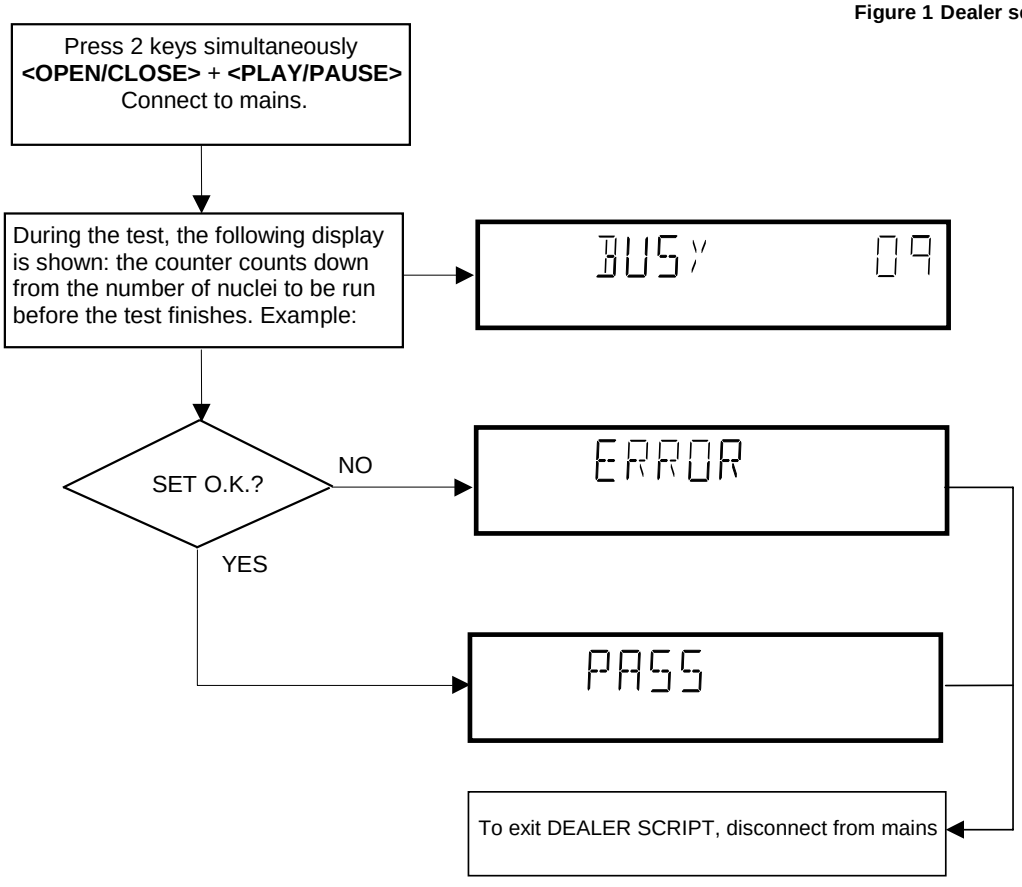

Figure 2 Dealer Script

2 Player Script

2.1 Purpose of Player Script

The Player script will give the opportunity to perform a test that will determine which of the DVD player's modules are faulty, to read the error log and error bits and to perform an endurance loop test. To successfully perform the tests, the DVD player must be connected to a TV set to check the output of a number of nuclei. For DVDv2b a multi-channel amplifier, a set of 6 speakers and an external video source are necessary to test. To be able to check results of certain nuclei, the player script expects some interaction of the user (i.e. to approve a test picture or a test sound). Some nuclei (e.g. nuclei that test functionality of the Basic Engine module) require that the DVD player itself is opened, to enable the user to observe moving parts and approve their movement visually. Only tests within the scope of the diagnostic software will be executed hence only faults within this scope can be detected.

2.2 Contents of Player Script

The player script contains all nuclei that are useful on a DVD player that is connected to a TV set and help to determine which module of the DVD player is faulty, as well as to read out the contents of the error logs.

2.3 Structure of Player Script

The player script consists of a set of nuclei testing the three hardware modules in the DVD player: the Display PWB, the Digital PWB, and the Basic Engine.
Nuclei run by the player test need some user interaction. In the next paragraph this interaction is described. The player test is done in two phases:

1. **Interactive tests:** this part of the player test depends strongly on user interaction and input to determine nucleus results and to progress through the full test. Reading the error log and error bits information can be useful to determine any errors that occurred recently during normal operation of the DVD player.
2. **The loop test:** this part of the player test will loop through the list of nuclei indefinitely, untill the player is reset. The list of nuclei is as follows:

PapChksFlash	ChangerI2cExp
PapI2cNvram	PapI2cLedIOExp
CompSdramWrR	FURORERSdramWrRLow
PapS2bEcho	PapNvramWrR
PapI2cDisp	

At the beginning of the tests, the DSW version number will be indicated on the local display of the DVD.
The display will look like the following:

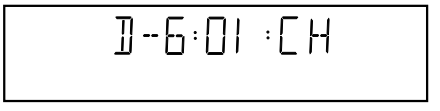

Figure 3

Pressing the PLAY/PAUSE key will proceed to the slave S /W version display, which is shown on the local display of the DVD player.
The display will look like the following:

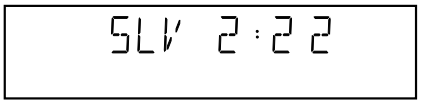

Figure 4

Press the PLAY/PAUSE key to proceed to the next test.

5.2.4 Survey

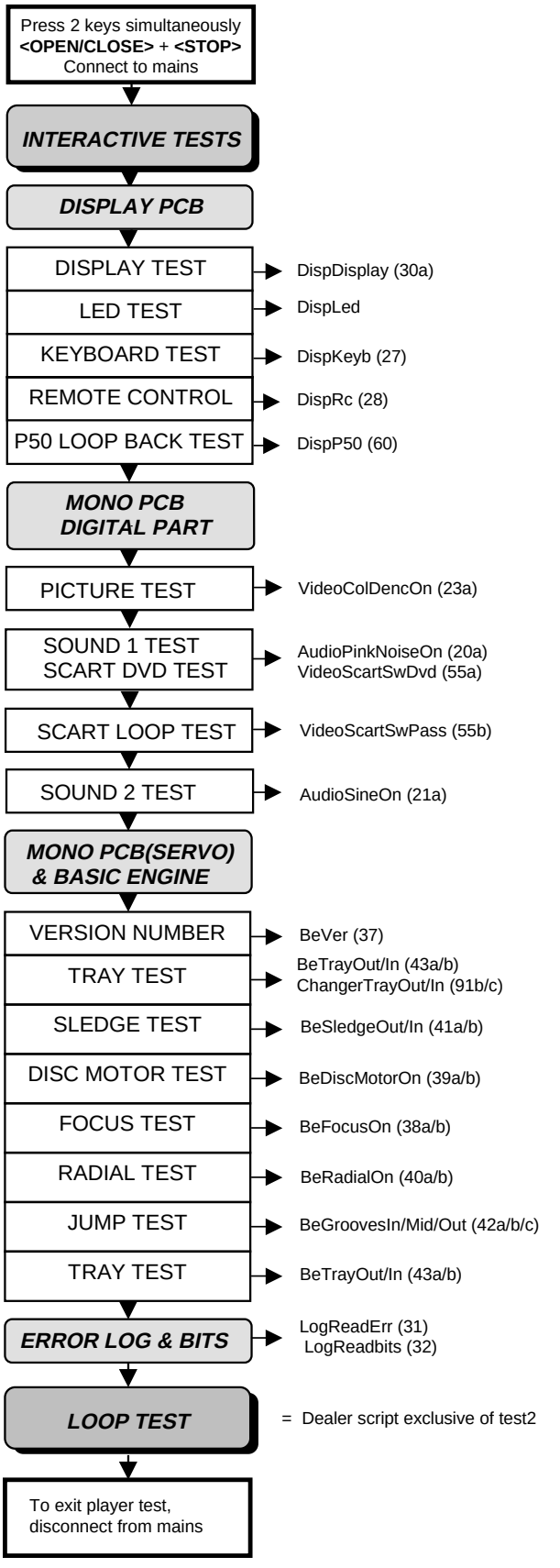

Figure 5

3 Display PCB

3.1 Display Test

The display test is performed by nucleus DispDis play. By putting as erie of test patterns on the local display, the local display is tested. To step through all different patterns, the user must either press OPEN/CLOSE (pattern is ok) or STOP (pattern was incorrect) to proceed to the next pattern. The display of patterns is continued in a cyclic manner, shown in Fig. 6, until the user presses PLAY/PAUSE. If the user presses PLAY/PAUSE before all display patterns are tested, the DispDisplay nucleus will return FALSE (display test unsuccessful).

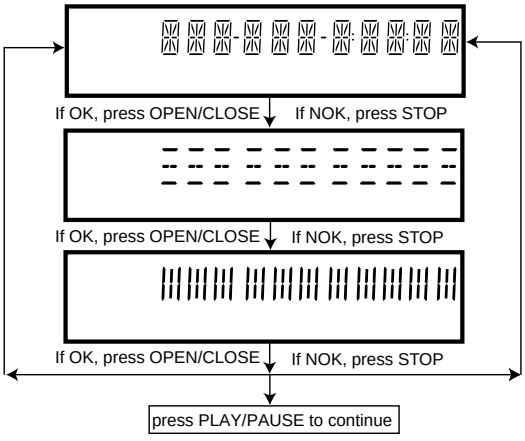

Figure 6

3.2 LED Test

The LED(s) on the DVD player is (are) tested by nucleus DispLed.
There are three test patterns for the LED test which can be stepped through using the OPEN/CLOSE key.
The user must check if the LED(s) is (are) lighted; if it is, press OPEN/CLOSE, if the LED did not light up, the user must press STOP key. By pressing PLAY/PAUSE before OPEN/CLOSE or STOP, the Displed nucleus will return TRUE (LED test successful).

3.3 Keyboard Test

The keyboard of the DVD player is tested by nucleus DispKeyb. The user is expected to press all keys on the local keyboard once. The code of the key pressed is shown on the local display (1 hexadecimal digit) immediately followed by a (hexadecimal) number indicating how many times that key has been pressed. Example of the local display during this test:

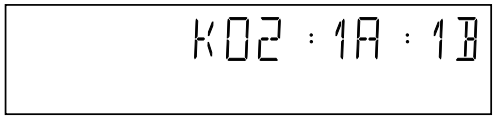

Figure 7

The key-codes displayed on the local display will scroll from right to left when the display gets full, the text "K" will remain on display.

KEY ID	KEY
0	PLAY / PAUSE ▷/▯▯
1	STOP ▯
2	OPEN / CLOSE ≜
3	STANDBY / ON
4	NEXT ▷▷/▷▷|
5	PREVIOUS |◁◁/◁◁
H	PLAYXCHANGE
I	DISC 1
J	DISC 2
K	DISC 3
L	DISC 4
M	DISC 5

Figure 8

If any keys are detected more than once (due to hardware error), the key-code is displayed twice (or more), with the second digit increased by 1.
If the user does not press all keys minimally once (in any order), the DispKeys nucleus will return FALSE and cause an error in the overall result of the player script.
The user can leave the keyboard test by pressing the PLAY/PAUSE key on the local keyboard of the DVD player for at least one full second.
The result of the keyboard test is shown on local display as follows:

Figure 9

Or

Figure 10

Pressing PLAY/PAUSE on the local keyboard again will proceed to the next text.

3.4 Remote Control Test

The remote control of the DVD player is tested by nucleus DispRc. The user must press any key on the remote control just once. The codes of the key pressed will be shown on the local display in hexadecimal format. Example:

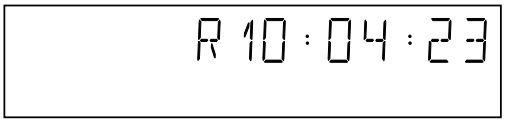

Figure 11

In this example 23 is the hexidecimal code of the pressed RC key. The user can leave the remote-control test by pressing PLAY/PAUSE on the local keyboard of the DVD player. The remote control test is successful if a code was received before the user pressed the PLAY/PAUSE key.

Pressing the PLAY/PAUSE key, before pressing a key on the remote control, gives an error in the remote control test (note that the remote control test will also fail if a key on the remote control was pressed but no code was received). The remote control test does not check upon the contents of the received code, that is it will not be checked if the received code matches the key pressed. If desired, the user can manually check this code by using a code-table for the remote control key-codes.

RC Key id	Hexadecimal code
STANDBY	0C
DISC SKIP	7F
DIMMER	13
T/C	C8
SOUND MODE	50
1	01
2	02
3	03
4	04
5	05
6	06
7	07
8	08
9	09
0	00
RETURN/RESUME	83
CD TEXT/BIT RATE	48
MENU	54
ON SCREEN	82
CURSOR UP	58
CURSOR DOWN	59
CURSOR LEFT	5A
CURSOR RIGHT	5B
OK	5C
PREVIOUS ⏮	21
NEXT ⏭	20
STOP ⏹	31
PLAY ▷	2C
PAUSE ⏸	30
SUBTITLE	4B
ANGLE	85
ZOOM	F7
AUDIO	4E
REPEAT	1D
REPEAT A-B	3B
SHUFFLE	1C
SCAN	2A

Figure 12

After pressing PLAY/PAUSE, the result of the remote control test is displayed on the local display of the DVD player as follows:

RC-- PASS

Figure 13

Or

RC-- FAIL

Figure 14

Pressing PLAY/PAUSE on the local keyboard again will proceed to the next test.

3.5 P50 Loop-Back Test

For the P50 loop-back test, the user must first press a key to decide if the test is to be performed.
The display will show the following message:

P50 : TEST

Figure 15

If the user presses STOP, the P50 test will be skipped.
If the user presses OPEN/CLOSE, the P50 test is performed and the result is displayed as follows:

Test successful:

P50 : PASS

Figure 16

Test fails:

P50 : FAIL

Figure 17

Press the PLAY/PAUSE key to continue to the next text

4 Mono PCB Digital Part

4.1 Picture Test

The picture test is performed by putting a predefined picture (color bar PAL) on the display (nucleus VideoColDencOn), and asking the user for confirmation.
The display will show the following message:

APP : PIC 1

Figure 18

By pressing OPEN/CLOSE the user confirms the test, pressing STOP will indicate the picture was invisible or incorrect. Pressing PLAY/PAUSE will proceed to the next test. If the user presses PLAY/PAUSE without pressing OPEN/CLOSE or STOP first, the result of this test will be TRUE (picture ok).

Note: The color bar must be simultaneously available on the CVBS, YC, and RGB (or YUV) outputs available. On the SCART only the CVBS and RGB signals will be available.

4.2 Sound 1 & SCART DVD Test

The first sound test is performed by starting a pink noise sound that needs confirmation from the user (nucleus AudioPinkNoiseOn).
The display will show the following message:

SCR : DVD

Figure 19

On the TV screen a color bar (generated by nucleus VideoColDencOn) is visible and the internally generated pinknoise is audible.
By pressing the PLAY/PAUSE key, the user confirms the test. Pressing the STOP key will indicate the sound was inaudible or incorrect.

Note: Only for double scart models, SCART loop-through will be simultaneously active during this test. SCART loop-through will be measured with the aid of an external video source.
By pressing the PLAY/PAUSE key, the video will be switched over to the external source. This must now become visible on the TV screen (using the SCART).
The local display will show the following message:

SCR : LOOP

Figure 20

The internally generated color bar is still available on the CVBS and Y/C outputs. And the pinknoise-signal is still available on the cinch audio outputs. By pressing the OPEN/CLOSE button, the internally generated color bar becomes visible again.

The test can be left by pressing the PLAY/PAUSE key for more than one second.

4.3 Sound 2 Test

The second sound test is performed by producing a sine sound (nucleus AudioSineOn). The signal can be stopped by pressing the STOP key.
The display will show the following message:

APP : SND2

Figure 21

After the audio signal has been stopped by pressing OPEN/CLOSE, the user confirms the test. Pressing STOP will indicate that something went wrong. Pressing PLAY/PAUSE will proceed to the next. If the user presses PLAY/PAUSE without pressing OPEN/CLOSE or STOP first, the result of this test will be TRUE (sound ok).

5 Basic Engine

5.1 Version Number

In the basic engine tests, the version number of the Basic Engine will be shown first, as in the following example:

B07:09:00

Figure 22

By pressing the PLAY/PAUSE key, the Basic Engine tests are started.

5.2 Tray Test

First, the tray is tested. The purpose of this test is also to give the user the opportunity to put a disc in the tray of the DVD player. Some tests on the Basic Engine require that a disc (e.g. DVD MPTD test disc) is present in the player. At the end of the Basic Engine tests this tray test will be repeated solely to enable the user to remove the disc in the tray.
The local display will look as follows:

BE--TRAY

Figure 23

By pressing OPEN/CLOSE the user can toggle the position of the tray. Note that this test will not contribute to the test result of the Basic Engine. Pressing PLAY/PAUSE will proceed to the next test. At this point, the tray will be closed automatically by the software if it was open.

5.3 Sledge Test (Visual Test)

The second Basic Engine test tests the sledge. The user can move the sledge as many times as desired by using OPEN/CLOSE (nucleus BeSledgeOut) and STOP (nucleus BeSledgeIn). Pressing PLAY/PAUSE on the local keyboard proceeds to the next test. Note that this test will not contribute to the test result of the Basic Engine.
The local display will look as follows during the sledge test:

BE--SLED

Figure 24

5.4 Disc Motor Test (Visual Test)

The third Basic Engine test tests the disc motor (nucleus BeDiscMotorOn).
The local display looks as follows:

BE--DISC

Figure 25

By pressing OPEN/CLOSE the user confirms that the disc motor is running. Pressing STOP indicates the disc motor does not work. Pressing PLAY/PAUSE proceeds to the next test, after a reset of the disc motor (nucleus BeDiscMotorOff). If the user presses PLAY/PAUSE before pressing OPEN/CLOSE or STOP, the result of this test will be TRUE (disc motor is running).

5.5 Focus Test (Visual Test)

The fourth Basic Engine test tests the focussing. First focussing is turned on by calling nucleus BeFocusOn.
The display will look as follows:

BE--FOCS

Figure 26

By pressing OPEN/CLOSE the user confirms that the focussing was successful. Pressing STOP indicates a focussing failure. Pressing PLAY/PAUSE proceeds to the next test after a reset of the focussing (nucleus BeFocusOff). If PLAY/PAUSE is pressed before OPEN/CLOSE or STOP, the result of this test will be TRUE (focus successful).

5.6 Radial Test (Visual & Listening Test)

The fifth Basic Engine test tests the radial functionality (nucleus BeRadialOn).
The local display looks as follows:

BE--RADI

Figure 27

By pressing OPEN/CLOSE the user confirms that the radial function works. Pressing STOP indicates the function does not work. Pressing PLAY/PAUSE proceeds to the next test, after a reset of the radial (nucleus BeRadialOff). If the user presses PLAY/PAUSE before pressing OPEN/CLOSE or STOP, the result of this test will be TRUE (radial successful).

5.7 Jump Test (Listening Test)

The sixth and last Basic Engine test tests the jumping by calling nuclei BeGroovesIn, BeGroovesMid and BeGroovesOut.
During this test, the local display looks as follows:

BE--GR00

Figure 28

The user can switch between the three different types of groove settings by pressing OPEN/CLOSE (forward to next nucleus in the list In-Mid-Out), or STOP (backward in the list In-Mid-Out). This is done in a cyclic manner; note that this test will not contribute to the test result of the Basic Engine. Pressing PLAY/PAUSE proceeds to the next test, after the disc motor has been shut off with a call to nucleus BeDiscMotorOff.

5.8 Tray Test

As a last action for the Basic Engine tests, the tray test is repeated. The local display will look as follows:

BE--TRAY

Figure 29

This test is meant to give the user the opportunity to remove the disc in the tray. The tray position can be toggled using the OPEN/CLOSE key. The tray will be closed (by the software, if it is open) before proceeding to the next test when the user presses the PLAY/PAUSE key.

5.9 Error Log (See Table on Next Page)

Reading the error log and error bits information can be useful to determine any errors that occurred recently during normal operation of the DVD player. Reading the error log is done by nucleus LogReadErr.
The display during the errorlog readout looks as follows :

E 18:01:04

Figure 30

Note: Previous versions of the diagnostic software showed a 8-digit error code.
Due to limitations in the number of digits that can be displayed by some front panel displays, the most significant digits will not be shown. This can be done since all the error codes used by this player has set these 2 digits to ì00î

By pressing OPEN/CLOSE or STOP the user can move forward or backward (respectively) through the logged error codes. If "0000" is displayed at all positions, the error log is empty. Display of the logged errors is done in a cyclic manner.
By pressing PLAY/PAUSE on the local keyboard, the user can proceed to the next test.

5.10 Error Bits

Reading the error bits is done by nucleus LogReadBits. The display during the errorbits readout looks as follows:

EB-- 04

Figure 31

Only the identification number (decimal) representing set errorbits will be shown. By pressing OPEN/CLOSE or STOP, the user can move forward or backward (respectively) through the logged error codes. If the display only shows "EB-0", no error bits were set. By pressing PLAY/PAUSE the user can continue to the next test.

6 Loop Test (See Table Below)

At the start of the loop test, the local display of the DVD player will show the interactive player test result readout in the following display:

010 00

Figure 32

The left side of the display contains a 3-digit code, which can have a value between 000 and 111. These values indicate the faulty modules and are to be interpreted as follows:

Displayed Value	Indication for each module		
	Basic Engine	Mono PCB	Display PCB
000	ok	ok	ok
001	ok	ok	faulty
010	ok	faulty	ok
011	ok	faulty	faulty
100	faulty	ok	ok
101	faulty	ok	faulty
110	faulty	faulty	ok
111	faulty	faulty	faulty

Figure 33

The loop test will perform the same nuclei as the dealer test, but it will loop through the list of nuclei indefinitely. The display of the DVD player will display not only the three digits indicating correct/faulty modules and the last found error code (as mentioned, faults are detected as far as they can be within the scope of the diagnostic software), but also a loop counter indicating how many times the loop has been gone through. If an error was detected, the display will remain as in figure 34 until the user presses the PLAY/PAUSE key and then it will continue to the next loop.
Example:

010:5403

Figure 34

The 2-digit number (23) on the right of figure 32 indicates the number of times the loop test has been performed.

After one loop cycle: Display the 3-digit module bits together with the last error code which occured in the loop test. The 4 digits at the right side of the display (fig. 34) show the last error that was found during the loop test. The leftmost two digits (54) of this code indicates which nucleus resulted in a fault. The rightmost two digits (03) refer to the faultcode within that nucleus.

6.1 Errorlog

Explanation:
The application errors will be logged in the NVRAM. The maximum number of error bytes that will be visible is 16. The first word (4 digits) of the byte is the component identification, the last word is the error code.
The diagnostics software will present a combination of this component identification plus an error code on the local display (and on the attached terminal). The last reported error is shown as < 00000000, the oldest visible error as 00000000 > and the errors in between as < 00000000 >.
The devices that may report errors are the serial controller (UART), the basic engine (BE), the slave processor (SLPH), the SACD Stream Manager (SSM) and the SACD Media Access (SMA). The identification of these components is as follows:

Component name	Component identification
Serial controller (UART)	000A
Engine (BE)	0016
Slave Processor (SLPH)	001A
SACD Stream Manager (SSM)	001C
SACD Media Access (SMA)	002E
Diagnostic software (DS)	Dxxx

The tables in the next chapters list the error code and corresponding problem. The Explantion column has a more detailed description and the most likely reason for the error.

Some Examples:
002E0000 (SMA reported a timeout error)
0016010A (Engine could not fully close or open the tray)
D0010001 (Flash checksum failed).

UART Error Codes

Error Number	Error name	Explanation
0000	BUF_OVERFLOW	To many characters were offered in too little time. Reason: system was too busy doing other jobs.
0001	COMMUNICATION	Usually a protocol error. Reason: bad connection between engine and processor.
0002	TIME OUT	

BE Errors

Error Number	Error name	Explanation
0101	S2B_ILL_COMMAND	Parameter(s) not valid for this command. Reason: some communication problem between UART and engine.
0102	S2B_ILL_PARAM	Command not allowed in this state or unknown. Reason: see S2B_ILL_COMMAND error
0103	S2B_SLEDGE	Sledge could not be moved to home position.
0104	S2B_FOCUS	Focus failure
0105	S2B_MOTOR	Motor could not reach speed within timeout
0106	S2B_RADIAL	Servo didn't get on track after several retries.
0107	S2B_PLL_LOCK	PLL could not lock in Accessing or Tracking state
0108	SBC_HEADER_TO	Header timeout
0109	S2B_SBC_NOT_FOUND	Requested subcode item could not be found.
010A	S2B_TRAY	Tray could not be opened or closed completely.
010B	S2B_TOC_READ	TOC could not be read within timeout period.
010C	S2B_JUMP	Requested seek could not be performed.
010D	S2B_NON_EXIST_SES	Attempt to access a non-existing session.
010E	S2B_NON_EXIST_BCA	Caller tries to acces a non-existing BCA area
010F	Speed setting	A wrong or inappropraiate speed value has been set
0116	NO_DISC	No disc selected
011A	TRAY_INIT	After reset, initialized tray
011B	NO TOC INFO	No TOC information in lead-in area or erase TOC found
01F0	S2B_OVERRUN	Too many bytes received over S2B Reason: see S2B_ILL_COMMAND error
01F1	S2B_COMM_TO	Not enough bytes are received over S2B Reason: see S2B_ILL_COMMAND error
01F2	S2B_PARITY	Byte received with parity error. Reason: see S2B_ILL_COMMAND error
01F3	S2B_ILL_PHASE	CMD IDC is not valid, transmission out of sync. Reason: see S2B_ILL_COMMAND error
01F4	S2B_ILL_NR_OF_BYTES	Byte count has an illegal value. Reason: see S2B_ILL_COMMAND error

SLPH Error Codes

Error Number	Error name	Explanation
0000	COMMUNICATION	Error in I2C communication. Reason: bad connection between slave processor and main processor.

SSM Error Codes

Error Code	Error name	Explanation
0006	SP_SYNCERROR	System cannot get synchronized with sectors coming from disc. Reason: Usually a damaged disc or the player was dropped/ pushed during operation. If not, the engine is malfunctioning.
0007	SP_EDCERROR	Data coming from disc is damaged. Reason: see SP_SYNCERROR

Error Code	Error name	Explanation
0008	SP_CONTINUITYERROR	Sequence of sectors coming from disc is incorrect. Reason: see SP_SYNCERROR
0009	DMX_CONTINUITYERROR	Sequence of sectors is incorrect. Reason: problem with buffer RAM
000A	LLD_ERROR	An illegal audio format was offered to the decoder. Reason: unknown audio type on disc or problem with buffer RAM
000B	BCU_ERROR	Internal problem in Furore chip

SMA Error Codes

Error Number	Error name	Explanation
0000	SMA_TIMEOUTERROR	Data coming from disc not in time. Reason: damaged disc or engine problem.

6.2 Trade Mode

When the player is in Trade Mode, the player cannot be controlled by means of the front key buttons, but only by means of the remote control.

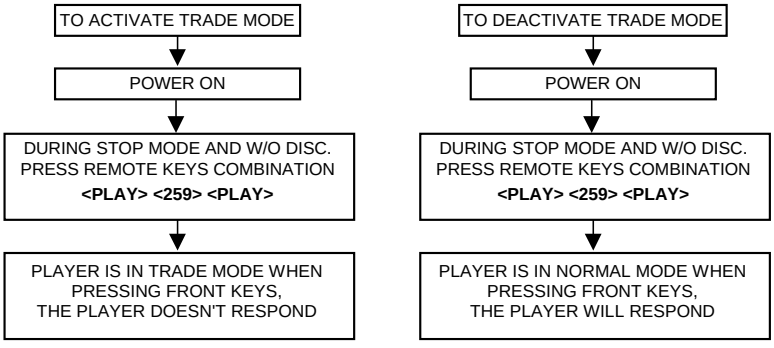

Figure 35

Note: To activate and deactivate the Trade Mode with the disc in the player, the procedure is similar to above, except that the remote control keys combination is pressed at the instant when the local display is flashing “READING”

■ IC DATA

DVDALAS2plus Advanced Analog DVD Signal Processor and Laser Supply

TZA1033

DEVICE BLOCK DIAGRAM

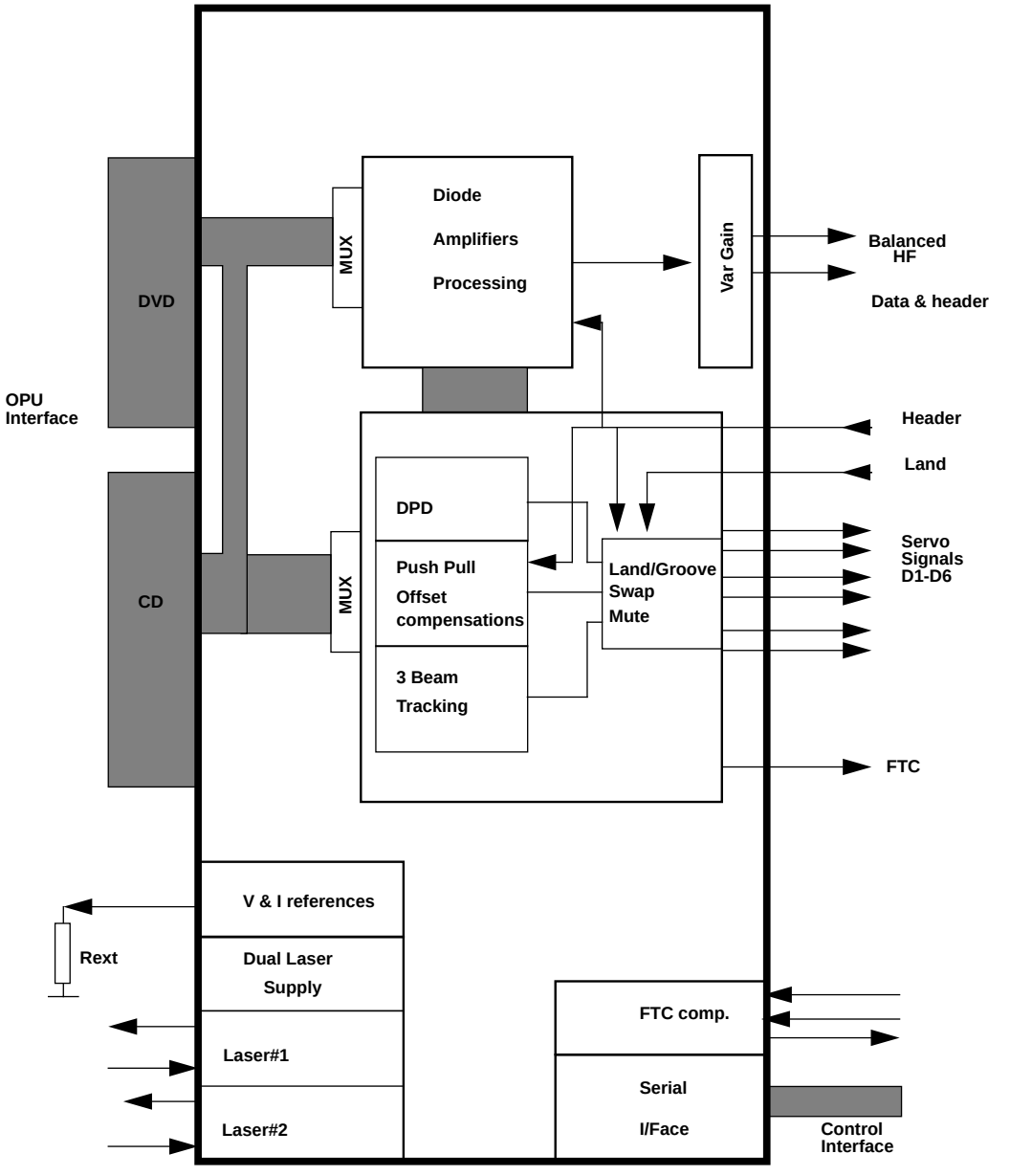

TZA1033 Device Block Diagram (item 7100)

DVDALAS2plus Advanced Analog DVD Signal Processor and Laser Supply

TZA1033

PIN COFIGURATION

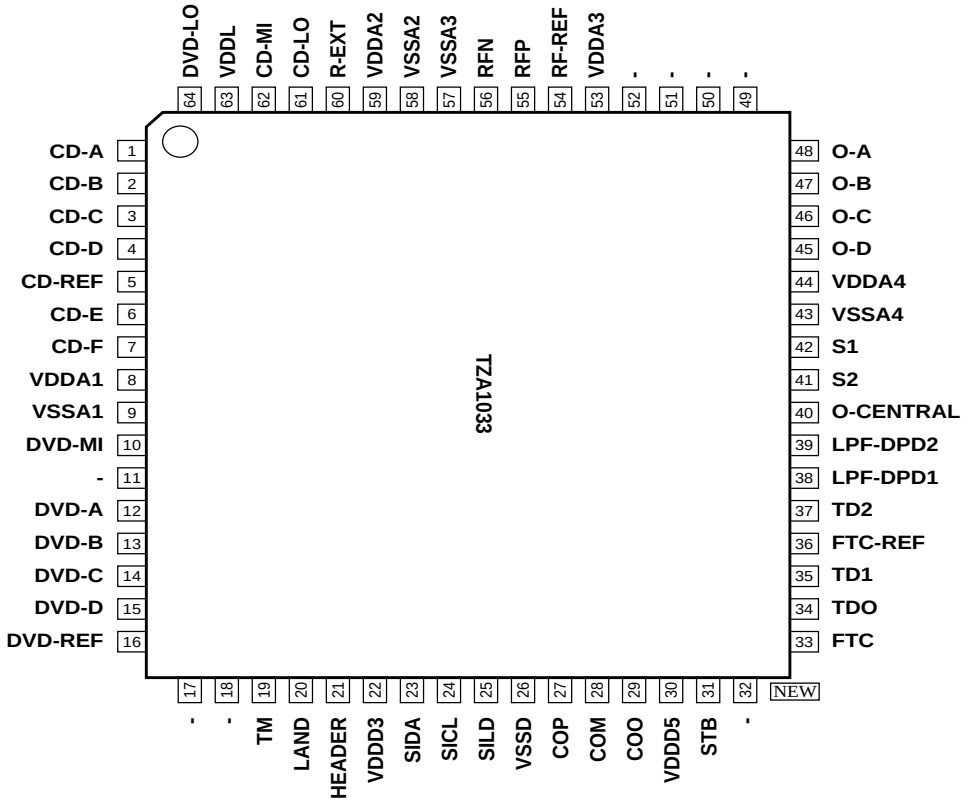

Pin configuration.

TZA1033 Pins (item 7100)

Front-end Processor SAA7812HL

Diagram M2

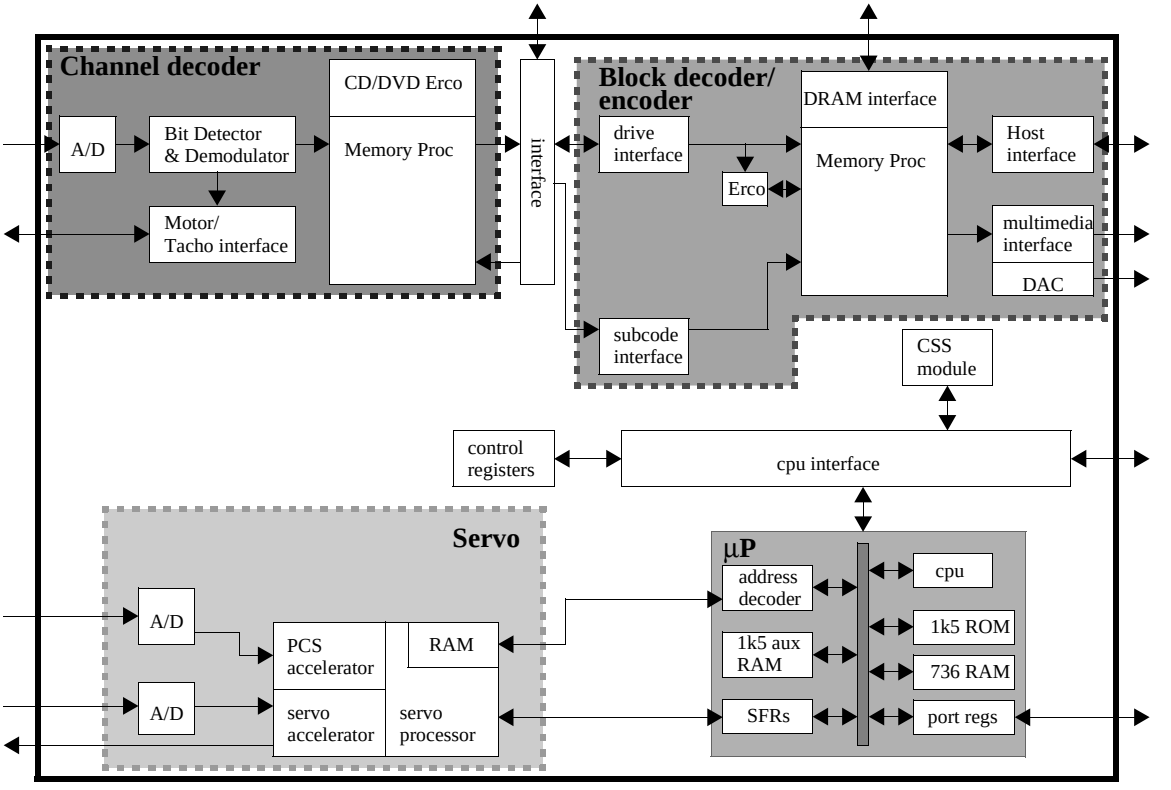

Functional Block Diagram

SAA7812 HL Block Diagram (item 7200)

Front-end Processor SAA7812HL

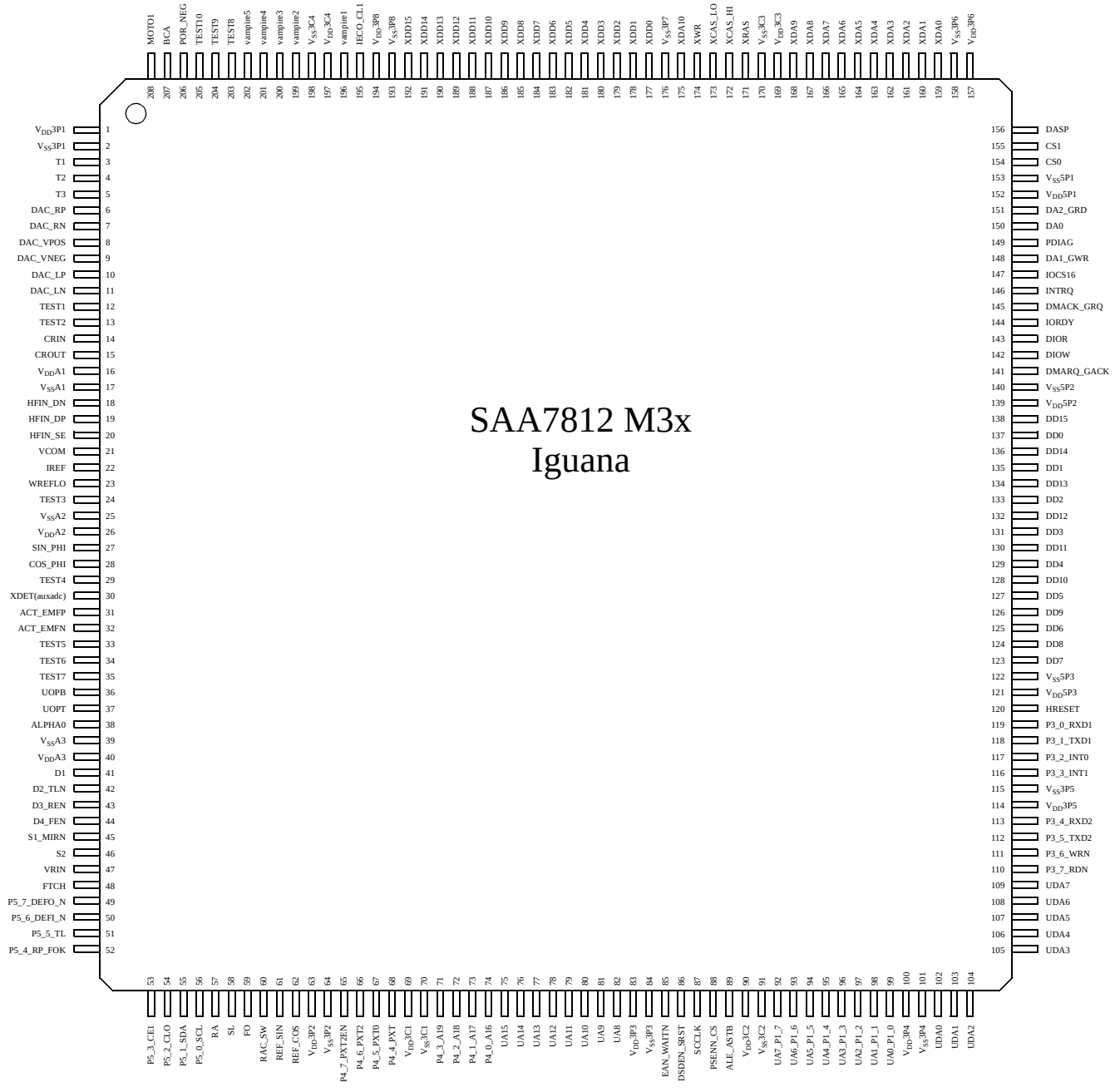

Pin Diagram

SAA7812HL Pins (item 7200)

Back-end Host Processor STi5588

Diagram M6

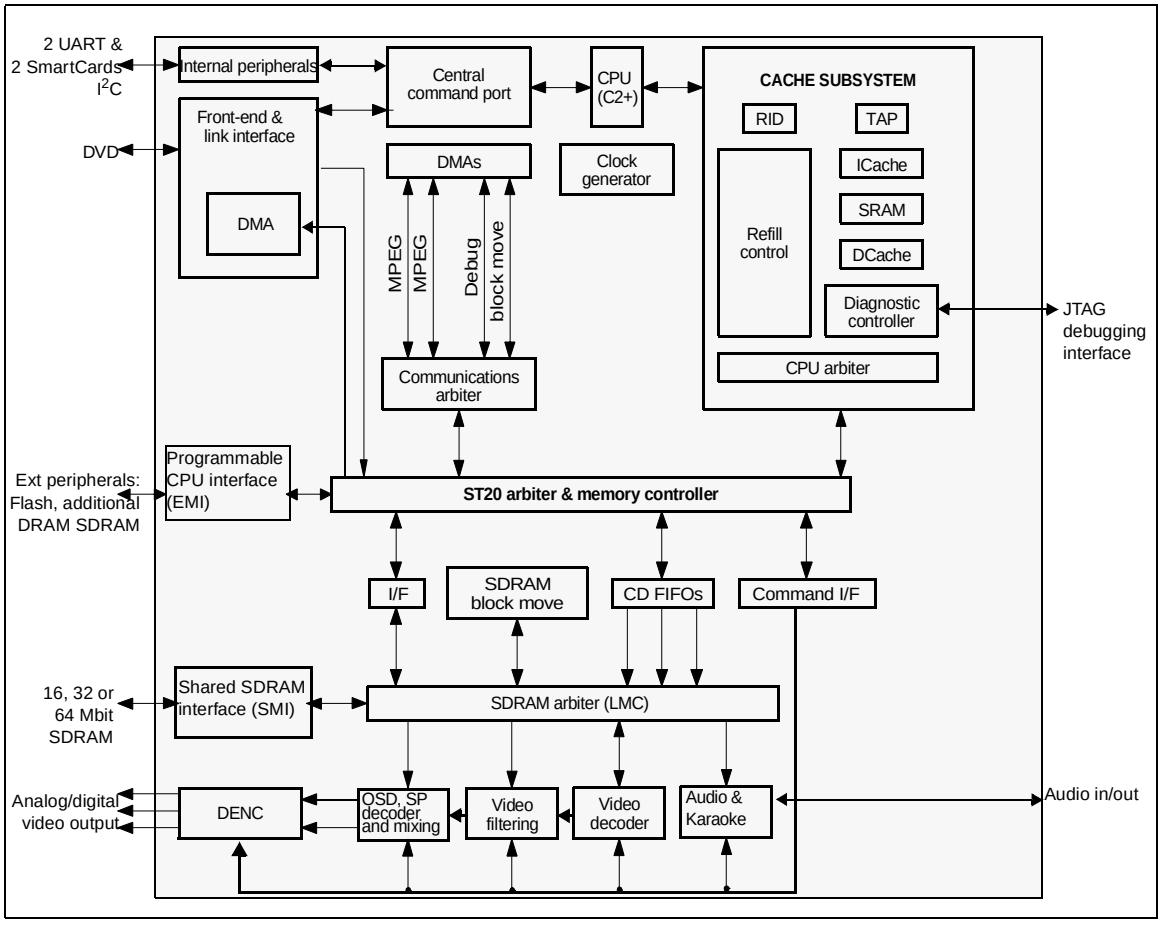

STi5588 Block Diagram (item 7600)

Back-end Host Processor STi5588

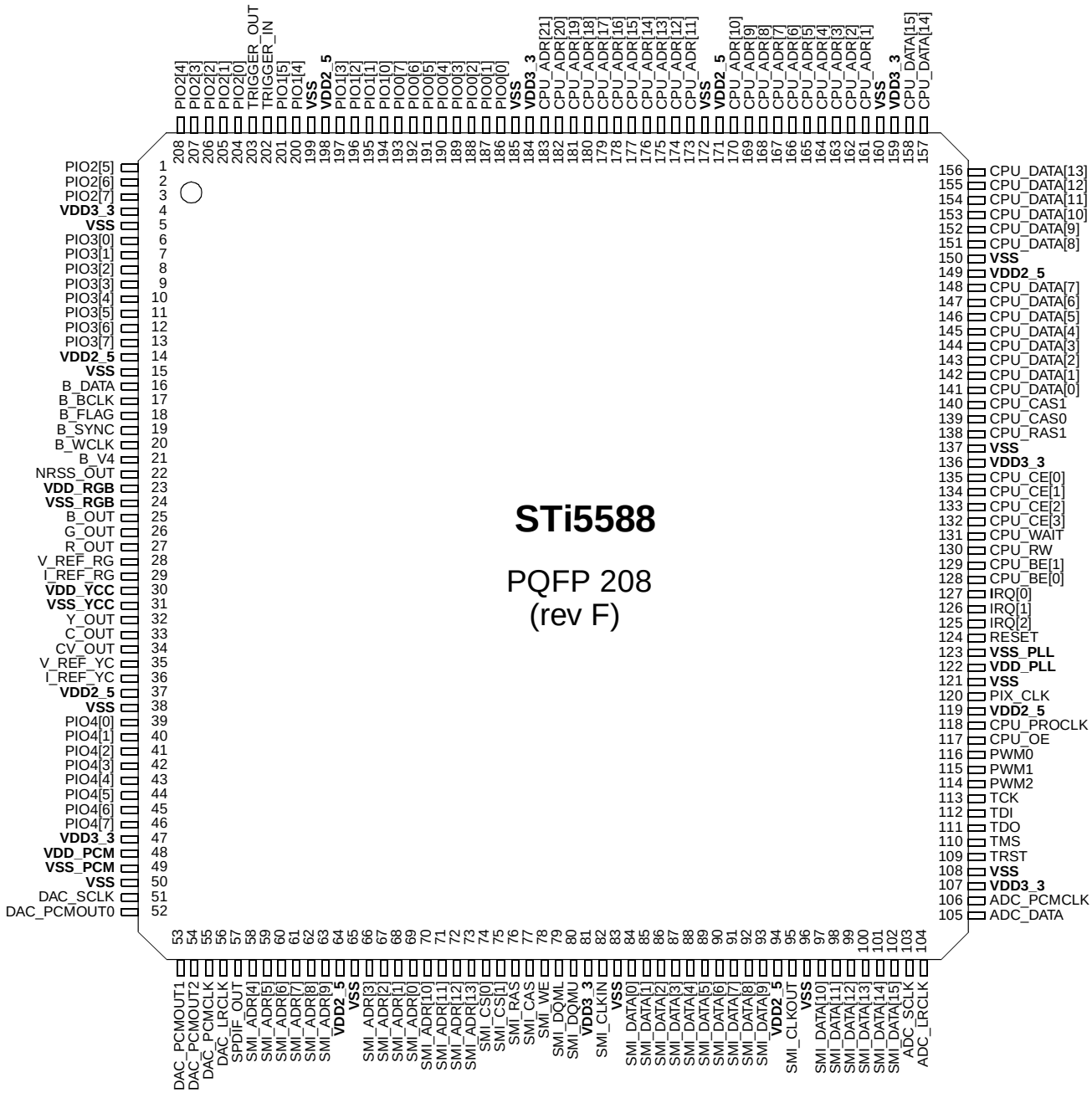

STi5588 Pins (item 7600)

MEMO

■ BLOCK DIAGRAM

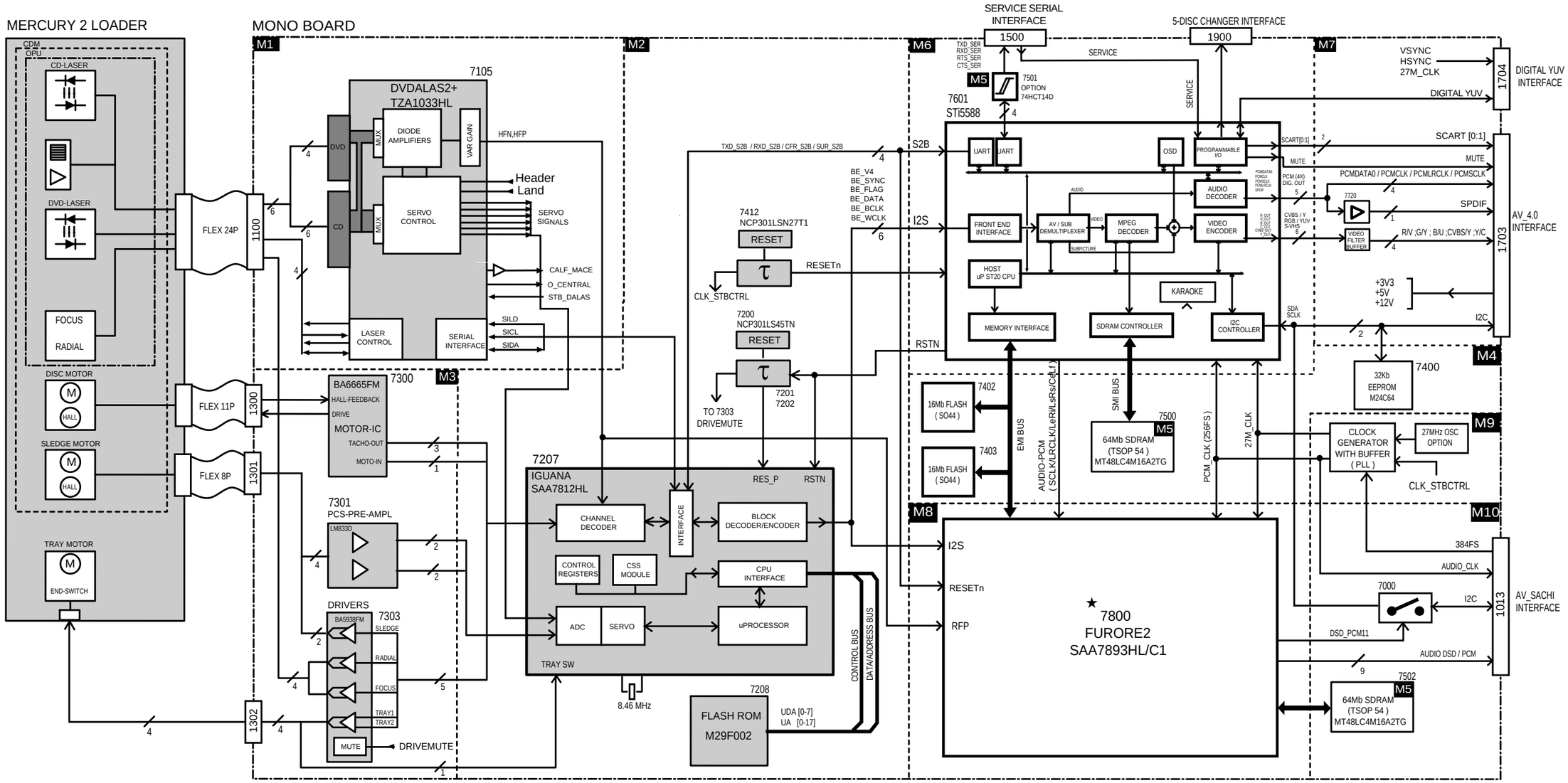

★ Not applied to these models

■ PRINTED CIRCUIT BOARD

MONO Board Top View

1012	B4
1013	B4
1014	D1
1100	F7
1200	C13
1300	I12
1301	F12
1302	H13
1500	F2
1501	I2
1701	B12
1702	H1
1703	B8
1705	B11
1900	C1
2000	E2
2100	G9
2101	F8
2102	G8
2103	F8
2104	F8
2105	E9
2106	E8
2107	E8
2108	G8
2109	G8
2110	F8
2112	G8
2113	F8
2114	G7
2115	F8
2116	G7
2117	F7
2118	G7
2119	G7
2120	F7
2121	G6
2122	F7
2123	F7
2124	F6
2125	F8
2126	F7
2127	F7
2128	F7
2129	F6
2131	F8
2132	G7
2133	F9
2134	G8
2135	G8
2137	F6
2139	F6
2140	F8
2141	G8
2142	F9
2143	G8
2144	F9
2145	G8
2146	F6
2147	E9
2213	D10
2233	F9
2240	F8
2241	F9
2300	I10
2301	I10
2302	H10
2303	H10
2304	G12
2305	F12
2307	G12
2308	H13
2309	H13
2310	H12
2312	G12
2313	G12
2314	G11
2315	E13
2316	E13
2317	H11
2318	I11
2319	I11
2320	E13
2321	G13
2322	F12
2323	F12
2400	F3
2401	F3
2403	F5
2408	D10
2410	E3
2411	E4
2412	E2
2413	D6
2414	D6
2415	C6
2417	C5
2418	D6
2500	B6
2521	F3
2522	F2
2523	F2
2525	G2
2526	H3
2527	H2
2528	H3
2529	H2
2530	I2
2531	I2
2532	I3
2533	H6
2605	I4
2607	G4
2635	I4
2636	I4
2638	F5
2700	C8
2701	B10
2702	C8
2705	B10
2706	G1
2707	H1
2708	C9
2709	C9
2713	H13
2715	B9
2716	B9
2717	B10
2718	C9
2719	B11
2720	C9
2725	C8
2728	E13
2729	B7
2730	B7
2732	D8
2737	B7
2738	B7
2740	B6
2741	A6
2742	D9
2747	C5
2748	G4
2751	C7
2809	D6
2814	D5
2816	E6
2900	C2
2901	C3
2902	D2
2903	D2
2904	D3
2906	B3
2907	D4
2908	B3
2910	B2
2911	C1
2912	C2
2913	C1
2914	C3
2917	B2
3003	E1
3019	B4
3020	B4
3021	B4
3022	B4
3024	B4
3026	B4
3027	B4
3028	B4
3030	B5
3038	E1
3100	E8
3101	E8
3102	E9
3103	E9
3104	F8
3105	G8
3106	E9
3107	G8
3108	E8
3110	F8
3111	E8
3112	E9
3113	E9
3114	E9
3116	E8
3117	F8
3122	F6
3123	G8
3124	F7
3125	G7
3126	F7
3127	G7
3128	G7
3129	G7
3130	G6
3131	G6
3132	F8
3133	F6
3134	G6
3136	F6
3138	G6
3142	F7
3143	F7
3144	F7
3145	F7
3146	F7
3147	F7
3149	G9
3150	G9
3152	F8
3153	F8
3154	G9
3155	G9
3156	F9
3157	G8
3158	F8
3159	F9
3160	G8
3161	G8
3162	G8
3163	G8
3261	F8
3262	F8
3263	E10
3265	F9
3272	E10
3274	E11
3275	E10
3277	E10
3278	E10
3279	E11
3280	E10
3282	E10
3283	E10
3293	F9
3294	E10
3300	I11
3301	I11
3302	I11
3305	H10
3306	H10
3307	H10
3309	H10
3310	G12
3312	G12
3315	G11
3316	G11
3319	G12
3321	G12
3322	G12
3323	H12
3324	F12
3326	F12
3327	F12
3332	H11
3333	H11
3334	H11
3336	F12
3337	F12
3338	I11
3339	E13
3342	F12
3344	G12
3345	H12
3346	I10
3402	D6
3404	D6
3405	D6
3406	D6
3407	D6
3409	D5
3411	D6
3412	C6
3413	D6
3414	C6
3501	F2
3503	F2
3504	F2
3505	F2
3506	F2
3509	F2
3510	F2
3511	F2
3512	F2
3513	F2
3514	F2
3515	F2
3516	G2
3517	G3
3518	G2
3519	G3
3520	H4
3521	H4
3522	H4
3523	H4
3524	H3
3526	I3
3527	H3
3528	I3
3529	H3
3530	G5
3531	G5
3633	D2
3649	D2
3700	C10
3701	C10
3702	B10
3703	B10
3704	C8
3705	C8
3706	C10
3707	C8
3708	B8
3709	B8
3712	B8
3713	C10
3714	B8
3715	C9
3716	C9
3717	C9
3718	B9
3719	B9
3722	B9
3723	B9
3724	B10
3725	B11
3726	C9
3727	C9
3728	C9
3729	B9
3730	B9
3733	B9
3734	B9
3753	B7
3763	H8
3764	C10
3765	C10
3766	C10
3767	C9
3768	C10
3769	C11
3770	C12
3771	C12
3772	C8
3774	C11
3775	C8
3800	G5
3814	D5
3815	D4
3816	C6
3900	C2
3901	C3
3903	D2
3904	D3
3905	C2
3906	C2
3908	B3
3909	B3
3910	B5
3911	C4
4001	E1
4002	D4
4007	C4
4008	C5
4014	E1
4100	G5
4103	F6
4104	F6
4203	G10
4301	H10
4303	G11
4304	G11
4400	C10
4401	C10
4405	E5
4500	G5
4607	F4
4608	H4
4901	C2
4902	C2
5100	F8
5101	G7
5102	G7
5300	H12
5301	H13
5302	H13
5402	D5
5403	F2
5501	H3
5504	G2
5700	B10
5702	B10
5703	H2
5704	G4
5709	C10
5710	C11
5718	I10
5719	B7
5720	B7
5723	B7
5726	C7
5801	E6
5900	B3
5901	C2
5902	C2
5903	B3
5904	D4
5905	B3
5906	C3
6100	E8
6101	E8
6400	D6
7100	E8
7101	E9
7102	F6
7103	E9
7105	G7
7106	F6
7107	F5
7108	F6
7109	E9
7110	F8
7111	G8
7209	F9
7300	H11
7301	G12
7303	F13
7305	D13
7400	C11
7401	F4
7404	D6
7405	D6
7406	E5
7409	C6
7412	D6
7413	D6
7501	G2
7504	H4
7505	G3
7506	H3
7507	I3
7508	F2
7509	G5
7700	C10
7701	C8
7703	C10
7705	C9
7708	C10
7709	C9
7710	C11
7720	B7
7803	E6
7901	D2
7903	C3
7904	D3
7905	D3
7906	C3

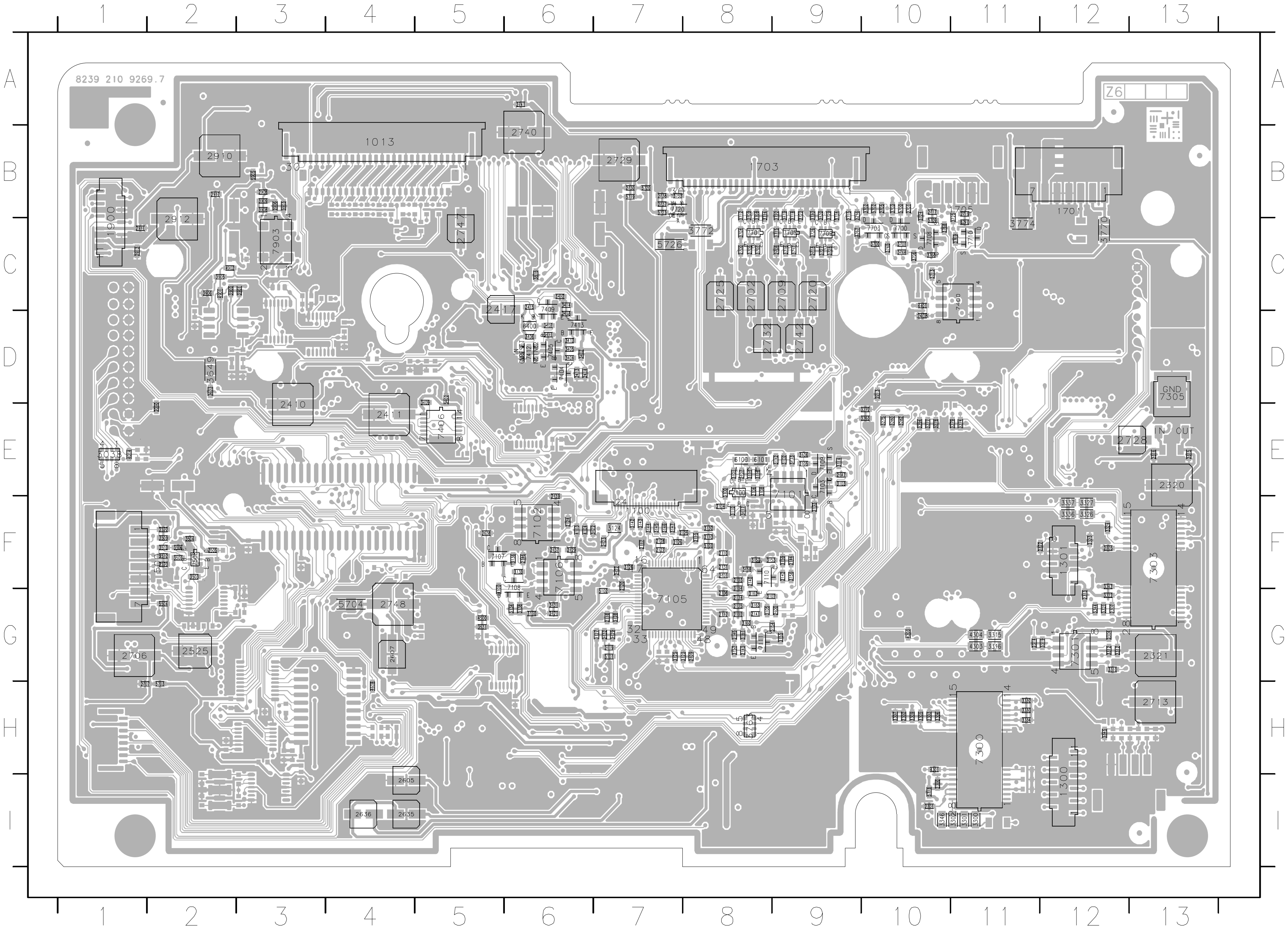

■ PRINTED CIRCUIT BOARD

MONO Board Bottom View

1201	F5	2201	G4	2217	G5	2232	E5	2507	C8	2608	G10	2624	E9	2711	F7	2743	G6	2810	D9	3031	B11	3204	G3
1704	H13	2202	D3	2218	E2	2234	D6	2510	C8	2609	H7	2625	E9	2712	F6	2744	G6	2811	E9	3032	C11	3205	G3
2004	B10	2203	D4	2219	E5	2235	D5	2511	H12	2610	H8	2626	G7	2714	H6	2745	F1	2812	E9	3033	B11	3206	G3
2005	B10	2204	G4	2220	E5	2236	D5	2512	H11	2612	H6	2627	F7	2721	F7	2746	E1	2813	E9	3034	B11	3207	F2
2006	B10	2205	G3	2221	G3	2237	D5	2513	C8	2613	H7	2628	H8	2722	F6	2749	D7	2815	E7	3035	B10	3208	G3
2007	B11	2206	F3	2222	E2	2238	D5	2516	B8	2614	H7	2629	H9	2723	D7	2750	D7	2817	C9	3036	C12	3209	G3
2008	B10	2207	G3	2223	E2	2239	E5	2517	B8	2615	H10	2630	G10	2724	C6	2800	E9	2915	C12	3037	C12	3210	G3
2009	B10	2208	F5	2224	E2	2306	F1	2518	G11	2616	H10	2631	F10	2726	H6	2801	D9	2916	C12	3118	E5	3211	G3
2010	B10	2209	D3	2225	E2	2311	F2	2519	H11	2617	H10	2632	E9	2727	H6	2802	E8	2918	B12	3119	E6	3212	G4
2011	B10	2210	F3	2226	E2	2402	E12	2520	G11	2618	H10	2633	E8	2731	C5	2803	D7	2919	C11	3120	E5	3213	G4
2012	B9	2211	E2	2227	E5	2405	D11	2524	G12	2619	F7	2634	F7	2733	H6	2804	D7	3008	C12	3121	E5	3214	F1
2013	B9	2212	E2	2228	E5	2501	C9	2601	E7	2620	G7	2637	G7	2734	H6	2805	C8	3010	D12	3200	G3	3215	G4
2014	B10	2214	D3	2229	E5	2504	C7	2603	G10	2621	H9	2703	G7	2735	B7	2806	C8	3023	B11	3201	G3	3216	G4
2015	B11	2215	G4	2230	E5	2505	H11	2604	H10	2622	H10	2704	G6	2736	C7	2807	E8	3025	B11	3202	E2	3217	G4
2200	G3	2216	F2	2231	E5	2506	G12	2606	G7	2623	F10	2710	I6	2739	C5	2808	C8	3029	C11	3203	G3	3218	G4

3219	F2	3238	E1	3257	E2	3803	E9
3221	G4	3239	F2	3266	C3	3804	E9
3222	G4	3240	E1	3267	D5	3805	E9
3223	G4	3241	F2	3268	D5	3806	E9
3224	G4	3242	G5	3270	D5	3807	D9
3225	E2	3243	E1	3271	D5	3808	E8
3226	F2	3244	E1	3273	D5	3809	E8
3227	G4	3245	G2	3284	E5	3810	E7
3228	G4	3246	F2	3287	E5	3811	E7
3229	G4	3247	F5	3288	E1	3812	D9
3233	E1	3250	E5	3289	E2	3813	D9
3234	E1	3251	C3	3290	E2	3902	C11
3235	G4	3252	E2	3291	E1	3907	C12
3236	F2	3255	E5	3304	I2	3912	C12
3237	F2	3256	E2	3308	H2	3913	B12
				3313	F2	3914	D12
				3317	G2	3915	D11
				3325	F2	3916	D12
				3328	F2	4005	B11
				3340	G2	4006	B11
				3341	G1	4200	C3
				3343	G2	4201	D3
				3401	D11	4204	E2
				3403	E12	4205	G3
				3502	H12	4600	E7
				3507	B8	4602	G10
				3508	C8	4605	F7
				3600	H7	4606	F7
				3604	E9	4800	E8
				3605	E9	4803	E8
				3606	C10	5200	G2
				3607	C10	5201	G3
				3608	C10	5202	E6
				3609	H8	5203	C2
				3611	E8	5204	C2
				3612	E8	5401	D11
				3613	E9	5502	C7
				3614	G10	5505	G12
				3616	H7	5600	G10
				3621	H10	5601	H7
				3622	E7	5602	F7
				3623	F7	5603	G7
				3624	G10	5701	G6
				3625	F7	5705	I6
				3626	G10	5706	F6
				3627	G10	5707	I6
				3628	F10	5708	H6
				3629	G10	5712	F6
				3630	G10	5713	D7
				3631	H7	5714	D7
				3632	H8	5715	H6
				3634	H8	5716	F1
				3635	H7	5717	E1
				3636	H7	5721	C7
				3638	H10	5722	H6
				3642	G7	5724	G6
				3643	G6	5725	I6
				3644	G11	5800	E7
				3645	G7	5802	E7
				3646	G6	6300	I3
				3647	H9	6301	I3
				3648	E9	6302	I4
				3710	G7	7000	B11
				3711	G6	7200	E2
				3720	F7	7201	F2
				3721	F6	7202	F2
				3731	F7	7203	E1
				3732	F6	7204	E2
				3735	C6	7207	E4
				3736	C6	7208	D2
				3737	C6	7402	E11
				3738	B6	7403	F12
				3739	B6	7500	H11
				3740	H6	7502	B8
				3741	H6	7601	G9
				3742	B6	7704	I6
				3743	B6	7707	H6
				3744	C5	7713	D7
				3745	C5	7714	C6
				3746	C6	7716	D1
				3747	B5	7717	C5
				3748	B5	7719	C7
				3749	H6	7721	C5
				3750	H6	7800	D8
				3751	B5	7801	E9
				3752	B6	7802	E8
				3754	C5	7902	C11
				3755	C5		
				3756	C5		
				3757	B5		
				3758	B5		
				3759	C6		
				3760	C6		
				3761	B5		
				3762	B5		
				3773	B6		
				3801	E10		
				3802	D10		

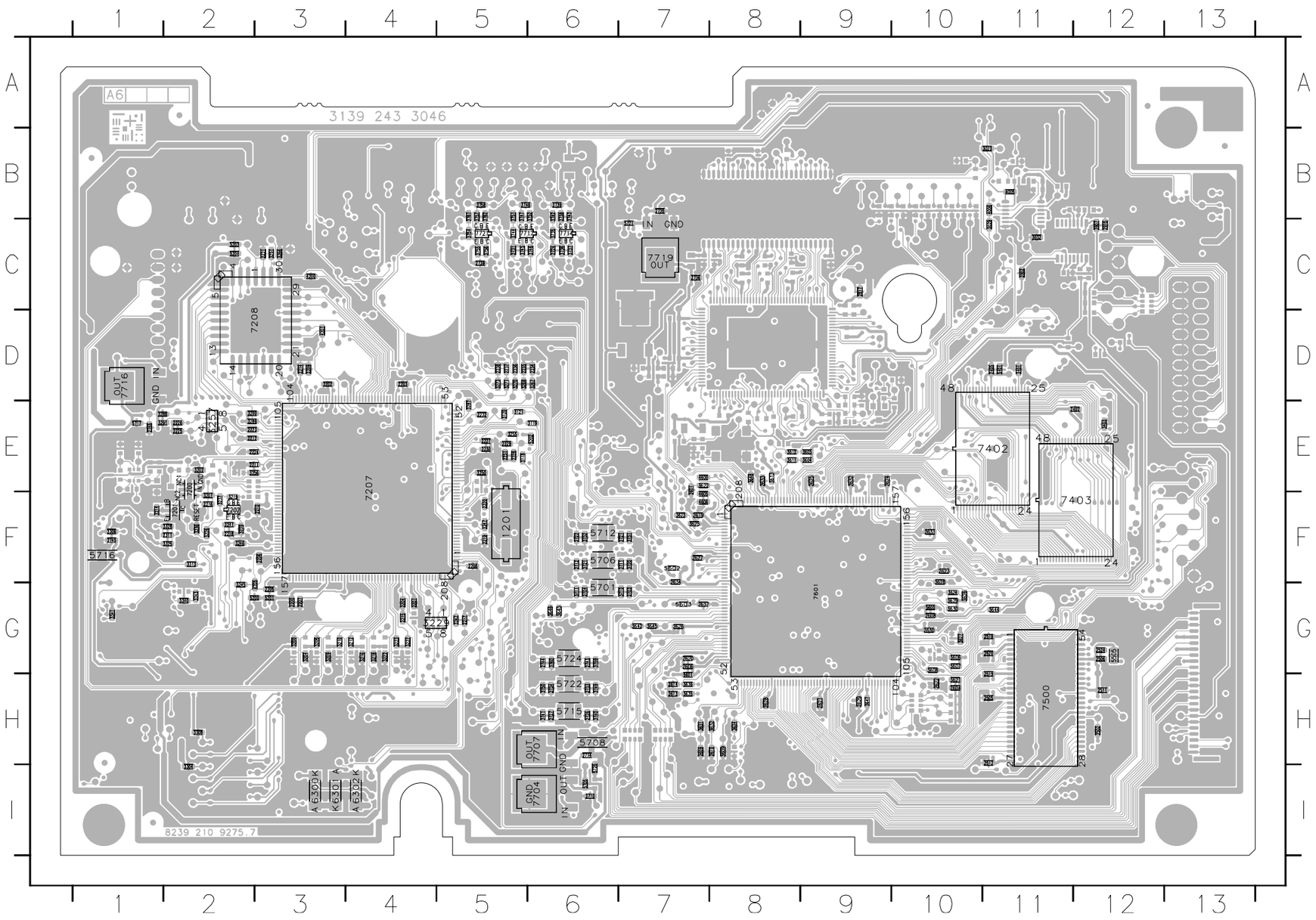

■ PRINTED CIRCUIT BOARD

MONO Board Testpoint View

F013 C2	F032 B10	F057 C12	F118 G6	F138 H5	F170 G5	F197 E7	F220 D5	F242 E1	F265 F2	F290 H3	F313 H3	F346 G2	F422 E12	F515 G11	F737 H10	F909 F8
F014 C2	F033 C9	F060 E13	F119 F6	F139 H5	F171 D4	F198 F7	F221 D5	F243 E2	F266 F2	F291 F3	F316 H4	F347 G3	F423 C10	F516 H12	F738 C6	F910 B13
F015 C10	F034 B9	F100 G5	F120 H5	F140 H7	F172 G7	F200 G4	F222 D5	F244 E2	F267 F2	F292 E5	F318 F2	F348 G1	F427 E10	F517 G12	F739 C6	F911 H7
F016 B10	F035 C9	F101 E5	F121 I8	F141 H5	F173 H6	F201 G4	F223 D3	F245 E2	F270 E5	F293 G4	F319 H8	F349 F1	F428 E10	F518 B8	F740 C6	F912 I8
F017 B11	F036 B11	F102 G6	F122 E7	F142 H7	F177 G7	F202 G5	F224 E2	F246 E2	F271 E5	F294 F7	F320 F2	F350 H4	F429 E12	F519 C9	F741 C6	F913 G12
F018 C10	F037 B11	F103 G6	F123 H5	F143 G5	F179 E7	F203 G5	F225 E2	F247 C2	F272 E5	F295 F3	F321 F2	F352 G2	F501 F12	F520 I11	F742 H13	F914 C13
F019 B10	F038 C11	F104 H5	F124 E7	F144 G7	F180 F7	F204 E5	F226 E5	F248 C3	F273 E2	F300 G1	F322 F2	F400 D11	F502 H10	F521 B8	F743 C6	F915 D11
F020 C10	F039 C11	F105 E6	F125 H5	F145 F6	F182 F7	F206 G5	F227 D5	F250 F2	F278 D5	F301 I2	F323 F2	F401 D11	F503 F12	F522 F10	F744 C6	F916 D12
F021 B10	F040 B11	F106 E7	F127 E7	F146 H5	F183 E6	F207 F5	F229 D6	F252 F1	F279 D5	F302 I3	F325 I3	F402 E12	F504 F12	F523 F10	F745 C5	F917 D12
F022 B11	F041 C11	F107 E5	F128 H5	F147 F7	F184 F7	F208 G3	F230 D5	F253 E1	F280 H4	F303 I2	F326 G1	F410 D4	F505 F12	F524 I11	F746 C5	F918 C11
F023 E7	F042 B9	F108 E5	F129 H6	F156 E6	F188 I8	F209 G2	F231 D5	F254 E1	F281 G4	F304 I3	F327 F3	F411 C4	F506 F12	F525 H10	F747 C3	F919 C11
F024 C10	F043 B11	F109 F7	F130 F6	F157 E6	F189 I8	F210 F5	F234 F3	F255 G2	F282 H4	F305 I2	F329 F1	F412 C3	F507 F13	F526 I12	F748 D5	F920 D11
F025 B10	F044 B9	F110 H4	F131 H6	F158 E6	F190 E7	F211 G5	F235 F3	F256 F2	F283 G4	F306 I3	F335 I3	F414 E9	F508 G12	F527 H12	F749 C5	F922 D10
F026 C10	F050 C12	F111 G7	F132 F5	F159 E6	F191 F5	F212 G5	F236 G4	F258 E2	F284 H4	F307 I2	F337 H2	F415 D12	F509 F13	F528 H12	F750 C5	F923 D10
F027 B10	F051 C12	F112 G5	F133 G5	F163 E7	F192 F5	F213 F5	F237 G4	F259 E2	F285 G4	F308 H3	F338 H1	F416 F11	F510 F12	F529 I11	F751 C5	F925 C11
F028 C10	F052 C12	F113 G5	F134 E6	F164 E7	F193 G6	F214 E5	F238 G5	F260 E2	F286 H3	F309 H3	F340 H1	F417 D9	F511 G12	F530 I10	F753 C5	F926 B13
F029 B10	F053 D12	F115 E7	F135 G6	F166 E6	F194 G6	F215 E5	F239 G5	F261 F2	F287 G3	F310 G1	F342 D5	F418 F11	F512 G12	F531 F11	F754 C5	F927 E7
F030 B10	F054 C12	F116 G5	F136 F7	F168 G5	F195 D9	F218 D6	F240 E2	F263 E1	F288 H3	F311 H2	F343 D5	F419 C9	F513 G13	F532 H9	F755 C6	F929 E10
F031 C10	F056 C12	F117 F7	F137 G5	F169 E6	F196 I8	F219 D6	F241 G5	F264 E2	F289 G3	F312 H4	F344 H2	F420 C9	F514 G12	F533 B9	F756 C6	F930 C11
														F534 I9	F758 C6	F931 C10
														F601 G10	F759 C6	F932 C11
														F602 E8	F760 C4	F933 B13
														F603 E8	F761 B4	F934 B13
														F604 G10	F762 C5	F935 D11
														F605 G10	F763 H6	T001 C2
														F606 I7	F764 C4	T002 D2
														F607 G10	F765 I7	T003 D2
														F608 A11	F766 B6	T004 D2
														F609 B10	F767 I7	T005 D2
														F610 G7	F768 C6	T006 D2
														F611 G6	F769 I7	T007 D3
														F612 G7	F770 B5	T008 D3
														F613 G6	F771 H7	T009 D3
														F614 G7	F772 B5	T010 B2
														F615 F7	F773 I7	T011 C3
														F616 E8	F774 B5	T012 D3
														F617 E8	F775 H7	T013 D3
														F621 H7	F776 H13	T014 D3
														F622 H8	F777 H13	T015 C2
														F623 H5	F778 I7	T016 C2
														F624 H7	F779 B6	T017 C3
														F625 H8	F780 H13	T018 C3
														F626 H8	F781 I1	T019 C2
														F627 H8	F782 I4	T020 C1
														F628 H10	F783 A8	T021 D3
														F629 H10	F784 H7	T022 D3
														F630 H10	F785 C7	T023 E3
														F631 H10	F786 D7	T024 B1
														F637 F7	F787 D7	T025 E2
														F641 G7	F788 B6	T026 B1
														F642 F7	F789 B5	T027 G5
														F643 F7	F790 B5	T028 E2
														F644 H6	F791 B5	T029 C3
														F645 H6	F792 B5	T030 D2
														F646 G6	F793 B5	
														F647 G7	F794 B5	
														F648 G7	F795 B5	
														F649 G7	F796 B5	
														F650 H7	F797 B6	
														F651 H7	F798 B6	
														F652 G7	F799 B6	
														F653 H7	F800 D10	
														F654 H7	F801 D10	
														F655 G10	F802 E9	
														F656 G10	F804 E9	
														F700 G6	F806 D9	
														F701 F6	F809 D9	
														F702 F6	F810 D9	
														F703 B6	F811 D9	
														F704 H6	F812 E9	
														F705 H6	F813 E9	
														F706 B5	F814 D9	
														F707 B4	F815 E9	
														F708 B6	F816 E9	
														F709 D1	F817 E9	
														F710 F1	F818 D10	
														F711 E1	F880 E12	
														F712 B4	F881 C6	
														F713 C6	F882 B5	
														F714 H10	F883 B6	
														F715 I4	F884 B6	
														F716 B7	F885 B6	
														F717 B7	F886 B6	
														F718 B7	F887 B4	
														F719 B7	F888 C3	
														F720 B7	F889 B6	
														F721 C7	F890 A8	
														F722 C4	F891 D7	
														F723 H10	F892 C2	
														F724 C4	F893 C2	
														F725 I6	F894 C3	
														F726 I6	F895 B6	
														F727 H7	F896 B5	
														F728 H6	F900 F13	
														F729 E9	F901 F13	
														F730 C5	F902 F13	
														F731 C5	F903 F13	
														F732 H10	F904 F13	
														F733 C5	F905 F13	
														F734 C5	F906 F13	
														F735 C6	F907 F13	
														F736 C6	F908 F8	

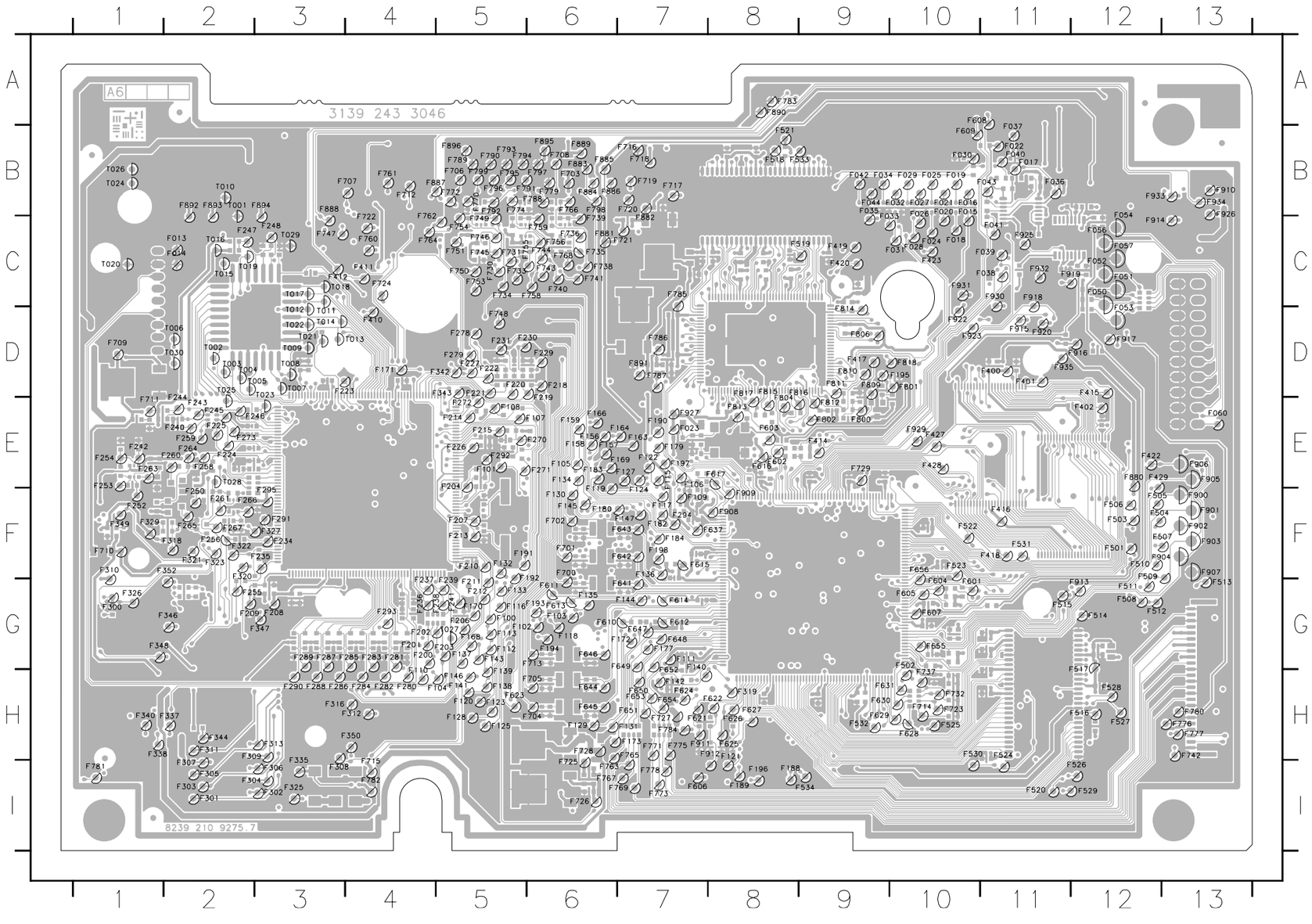

■ PRINTED CIRCUIT BOARD

AV Board Top View

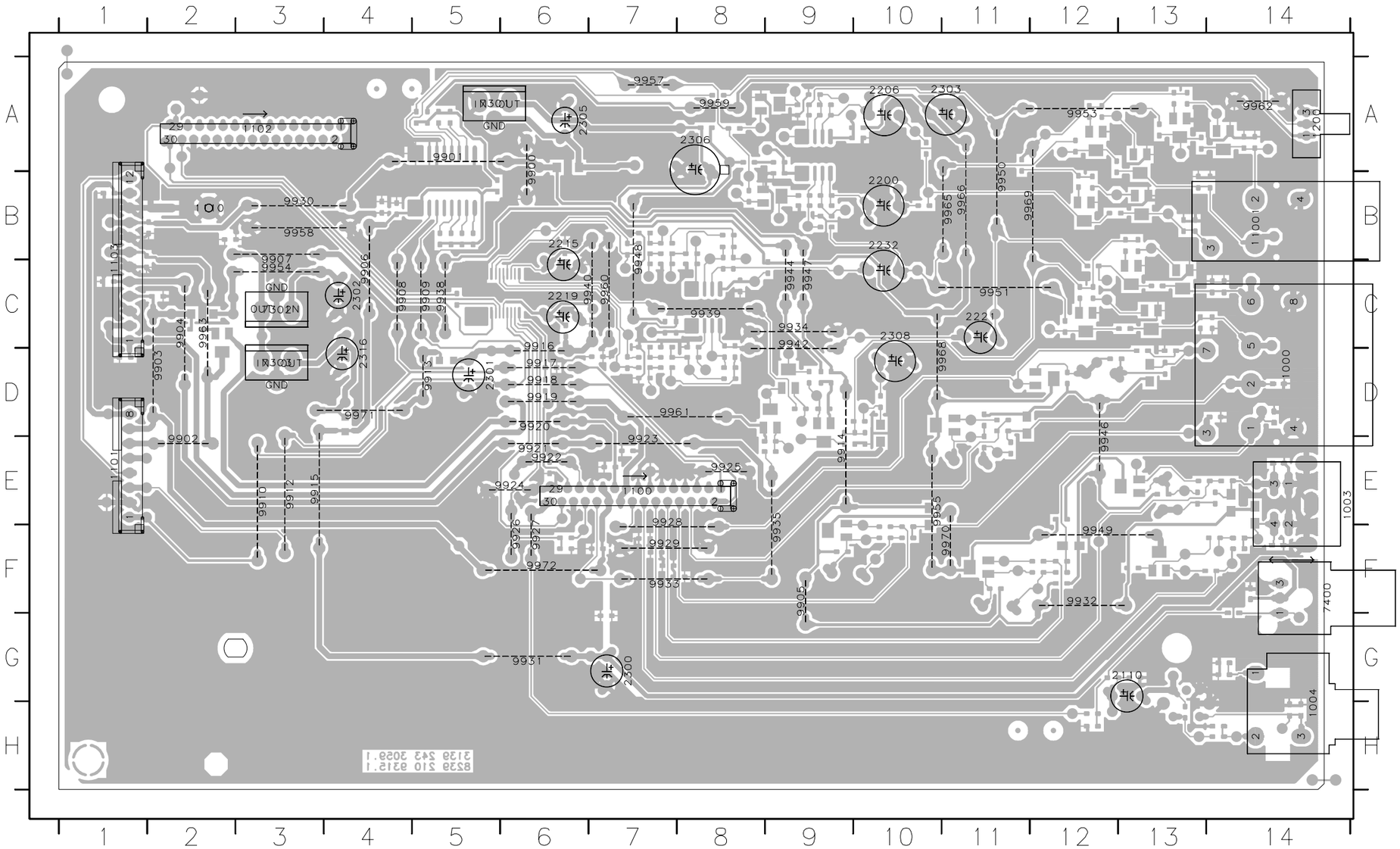

1000	D14	9947	C9
1001	B14	9948	B7
1003	E14	9949	F12
1004	H14	9950	B11
1100	E7	9951	C11
1101	E1	9953	A12
1102	A3	9954	C3
1103	B1	9955	E10
1110	B2	9957	A7
1200	A14	9958	B3
2100	F11	9959	A8
2102	D11	9960	C7
2104	F9	9961	D7
2106	E13	9962	A14
2110	G13	9963	C2
2200	B10	9965	B11
2206	A10	9966	B11
2212	D12	9968	D11
2215	B6	9969	B11
2219	C6	9970	F11
2221	C11	9971	D4
2232	B10	9972	F6
2300	G7		
2301	D5		
2302	C4		
2303	A11		
2305	A6		
2306	A8		
2308	C10		
2316	D4		
5100	H13		
7301	A5		
7302	C3		
7303	D3		
7400	F14		
9900	A6		
9901	A5		
9902	E2		
9903	D2		
9904	C2		
9905	F9		
9906	C4		
9907	B3		
9908	C4		
9909	C5		
9910	E3		
9912	E3		
9913	D5		
9914	E9		
9915	E3		
9916	C6		
9917	D6		
9918	D6		
9919	D6		
9920	D6		
9921	E6		
9922	E6		
9923	E7		
9924	E6		
9925	E8		
9926	E6		
9927	E6		
9928	E7		
9929	F7		
9930	B3		
9931	G6		
9932	E12		
9933	F7		
9934	C9		
9935	E9		
9940	C5		
9942	C8		
9944	C6		
9946	C9		

■ PRINTED CIRCUIT BOARD

AV Board Bottom View

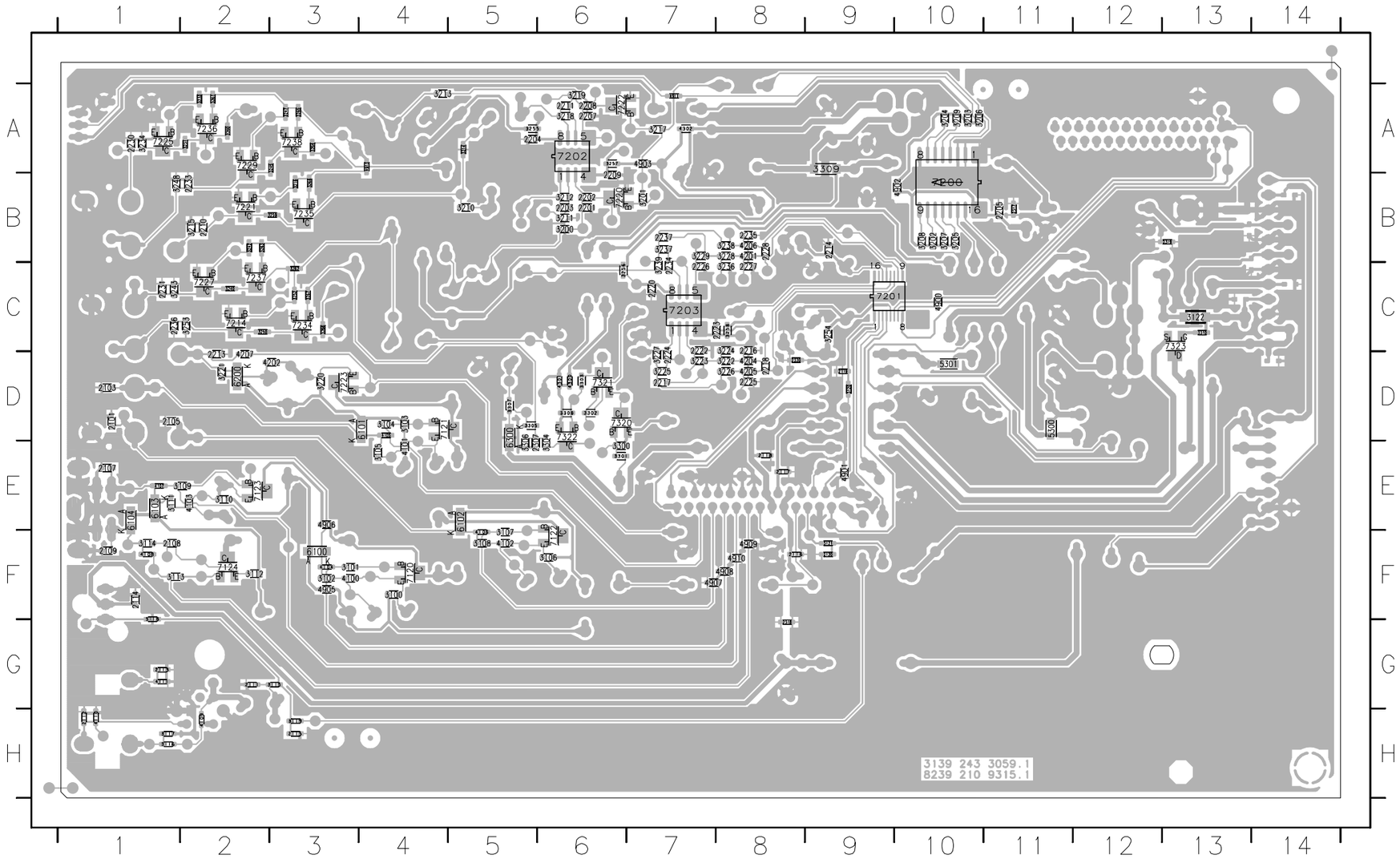

2101	D1	3119	H3	4100	F3
2103	D1	3120	D9	4101	E4
2105	D1	3121	F9	4102	F5
2107	E1	3122	C13	4103	E2
2108	F1	3200	B6	4104	F3
2109	F1	3201	B7	4105	D4
2111	G2	3202	B10	4106	F5
2112	H1	3203	A10	4107	E1
2113	G1	3204	A10	4108	F1
2114	F1	3205	B10	4109	H2
2115	H3	3206	A10	4110	H1
2116	F8	3207	B10	4111	G1
2117	E8	3208	B10	4201	B8
2118	E8	3209	A10	4202	D3
2119	D9	3210	B5	4204	D8
2120	F9	3211	B6	4205	D8
2201	B6	3212	B6	4206	B8
2202	B6	3213	A4	4207	D2
2203	B6	3214	A5	4300	D6
2204	A5	3215	B2	4301	D6
2205	B11	3216	B3	4302	A7
2207	A6	3217	A7	4900	C10
2208	A6	3218	A6	4901	F9
2209	B6	3219	A6	4902	B10
2210	B2	3220	D3	4903	A7
2211	A6	3221	D2	4905	F3
2213	D2	3222	D8	4906	E3
2214	B9	3223	D7	4907	F7
2216	C8	3224	C8	4908	F8
2217	D7	3225	D7	4909	F8
2218	D8	3226	D8	4910	F8
2220	C7	3227	D7	4911	A7
2222	C7	3228	B8	4913	A4
2223	C8	3229	B7	5300	D11
2224	D7	3231	A2	5301	D10
2225	D8	3233	A2	6100	F3
2226	C7	3234	A1	6101	D4
2227	C8	3236	C8	6102	E5
2228	B8	3237	B7	6103	E1
2230	A1	3238	B8	6104	E1
2231	C1	3239	C7	6200	D2
2233	B2	3240	C2	6300	D5
2234	C7	3242	B2	7120	F4
2235	B8	3243	C1	7121	D4
2236	C1	3245	A3	7122	F6
2237	B7	3247	A3	7123	E2
2307	E5	3248	B1	7124	F2
2310	D14	3250	C2	7200	B10
2311	C13	3252	C3	7201	C9
2312	C14	3253	C2	7202	A6
2313	C14	3254	C9	7203	C7
2314	B13	3255	A5	7214	C2
2315	B14	3256	C6	7220	B6
2317	B11	3257	A6	7221	B2
2318	G8	3258	C8	7222	A6
2319	B13	3259	B3	7223	D3
2320	D8	3260	A2	7225	A1
3100	F4	3261	A2	7227	C2
3101	F3	3262	C3	7229	A2
3102	F3	3263	B2	7234	C3
3103	D4	3264	A3	7235	B3
3104	D4	3265	A3	7236	A2
3105	E4	3266	C3	7237	C2
3106	F6	3267	C3	7238	A3
3107	F5	3268	B3	7320	D6
3108	F5	3300	E6	7321	D6
3109	E2	3301	E6	7322	D6
3110	E2	3302	D6	7323	C13
3111	E1	3303	D6		
3112	F2	3304	E6		
3113	F1	3305	D5		
3114	F1	3306	E5		
3115	G3	3307	D5		
3116	H1	3308	D6		
3117	H1	3309	A9		
3118	F1	3310	C13		

■ PRINTED CIRCUIT BOARD

AV Board Testpoint View

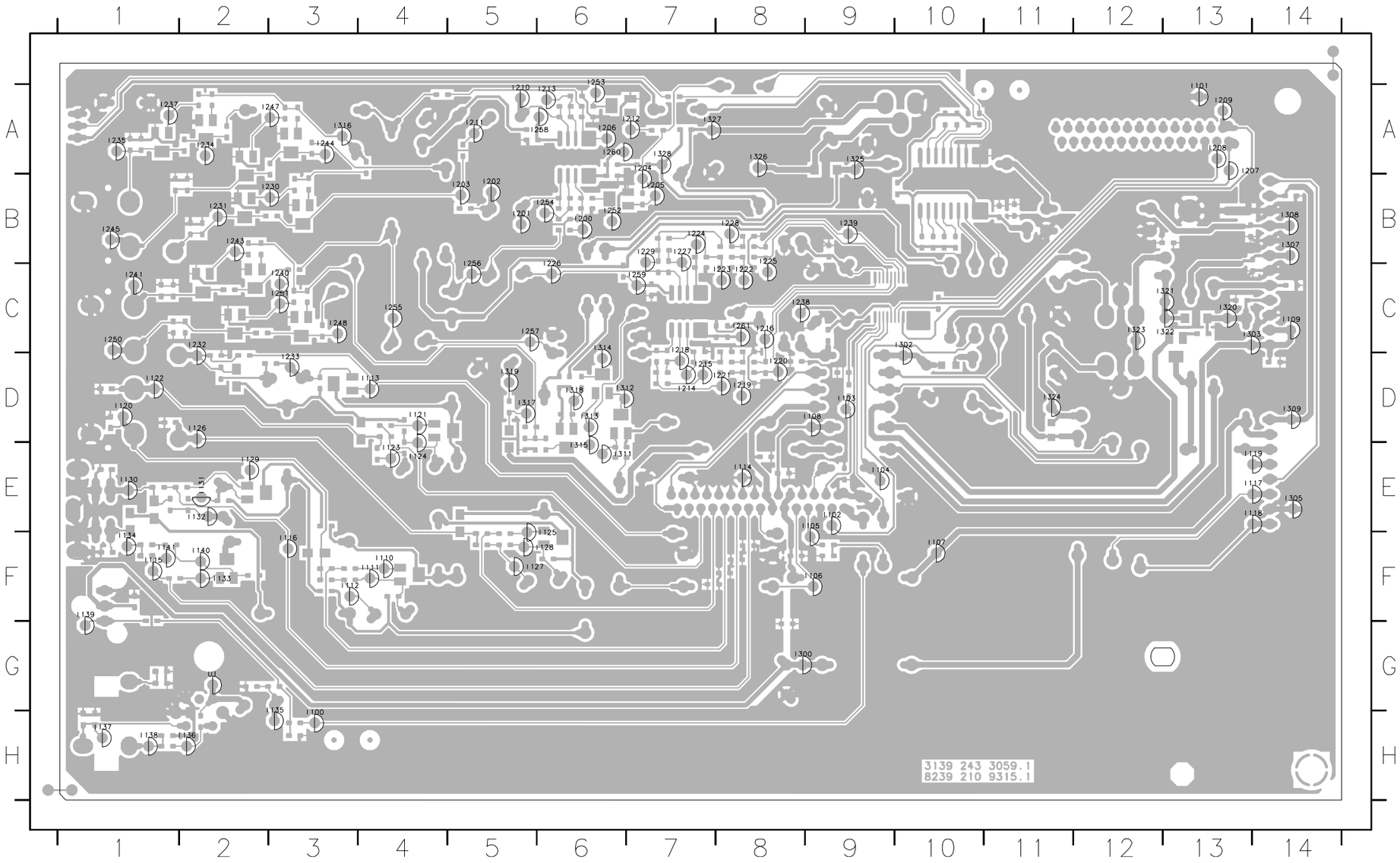

U1	G2	I234	A2
I100	H3	I235	A1
I101	A13	I237	A1
I102	E9	I238	C8
I103	D9	I239	B9
I104	E9	I240	C3
I105	F9	I241	C1
I106	F9	I243	B2
I107	F10	I244	A3
I108	D9	I245	B1
I109	C14	I247	A3
I110	F4	I248	C3
I111	F4	I250	C1
I112	F3	I251	C3
I113	D4	I252	B6
I114	E8	I253	A6
I115	F1	I254	B6
I116	F3	I255	C4
I117	E14	I256	C5
I118	E14	I257	C5
I119	E14	I258	A6
I120	D1	I259	C7
I121	D4	I260	A6
I122	D1	I261	C8
I123	E4	I300	G8
I124	E4	I302	D10
I125	F5	I303	C13
I126	D2	I305	E14
I127	F5	I307	B14
I128	F5	I308	B14
I129	E2	I309	D14
I130	E1	I311	E6
I131	E2	I312	D6
I132	E2	I313	D6
I133	F2	I314	D6
I134	F1	I315	E6
I135	H3	I316	A3
I136	H2	I317	D5
I137	H1	I318	D6
I138	H1	I319	D5
I139	G1	I320	C13
I140	F2	I321	C13
I141	F1	I322	C13
I200	B6	I323	C12
I201	B5	I324	D11
I202	B5	I325	A9
I203	B5	I326	A8
I204	B7	I327	A7
I205	B7	I328	A7
I206	A6		
I207	A13		
I208	A13		
I209	A13		
I210	A5		
I211	A5		
I212	A7		
I213	A6		
I214	D7		
I215	D7		
I216	C8		
I218	D7		
I219	D8		
I220	D8		
I221	D8		
I222	C8		
I223	C8		
I224	B7		
I225	C8		
I226	C6		
I227	B7		
I228	B8		
I229	B7		
I230	B3		
I231	B2		
I232	D2		
I233	D3		

■ PRINTED CIRCUIT BOARD

Front (1) Board Top View

1100 A7 1103 A9 1111 A4 1130 A8 1201 A2 1203 A3 1205 A9 1207 A8 1209 A9 2106 A9 2109 A8 2120 A7 6101 A2 6103 A3 6110 A1 6200 A1 6202 A2 6204 A4 7100 A5 7106 A9
1102 A1 1110 A2 1120 A9 1200 A1 1202 A2 1204 A3 1206 A7 1208 A9 2101 A7 2108 A9 2115 A9 6100 A1 6102 A2 6104 A3 6111 A1 6201 A2 6203 A3 6210 A1 7105 A9 7110 A7

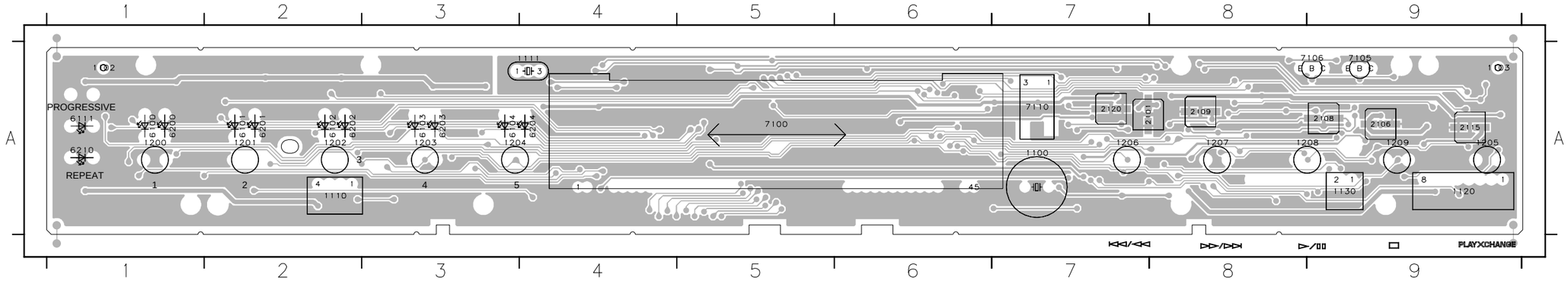

Front (1) Board Bottom View

2100 A4 2107 A1 2116 A4 2122 A6 3102 A4 3107 A8 3112 A6 3117 A4 3122 A5 3127 A1 3132 A8 3140 A1 3145 A1 3200 A9 3205 A7 3215 A9 3224 A7 3231 A6 4201 A2 4207 A1 6112 A1 7104 A1 7132 A2 7204 A8
2102 A5 2110 A1 2117 A3 2200 A6 3103 A4 3108 A8 3113 A5 3118 A4 3123 A5 3128 A1 3133 A2 3141 A1 3146 A8 3201 A3 3206 A2 3218 A6 3225 A7 4100 A2 4202 A2 4208 A2 6120 A1 7107 A8 7200 A6 7205 A7
2103 A1 2112 A6 2118 A3 2202 A6 3104 A9 3109 A7 3114 A5 3119 A3 3124 A1 3129 A1 3134 A2 3142 A1 3147 A8 3202 A3 3207 A4 3219 A8 3227 A6 4101 A1 4203 A2 6105 A3 7101 A5 7108 A1 7201 A9 7206 A6
2104 A1 2113 A5 2119 A1 3100 A6 3105 A9 3110 A7 3115 A3 3120 A3 3125 A1 3130 A2 3135 A2 3143 A1 3148 A6 3203 A8 3212 A9 3221 A7 3228 A7 4102 A3 4205 A1 6106 A4 7102 A5 7130 A2 7202 A9
2105 A1 2114 A5 2121 A3 3101 A6 3106 A9 3111 A6 3116 A3 3121 A4 3126 A9 3131 A2 3136 A2 3144 A1 3149 A6 3204 A3 3213 A9 3222 A8 3230 A6 4200 A2 4206 A2 6107 A6 7103 A4 7131 A2 7203 A8

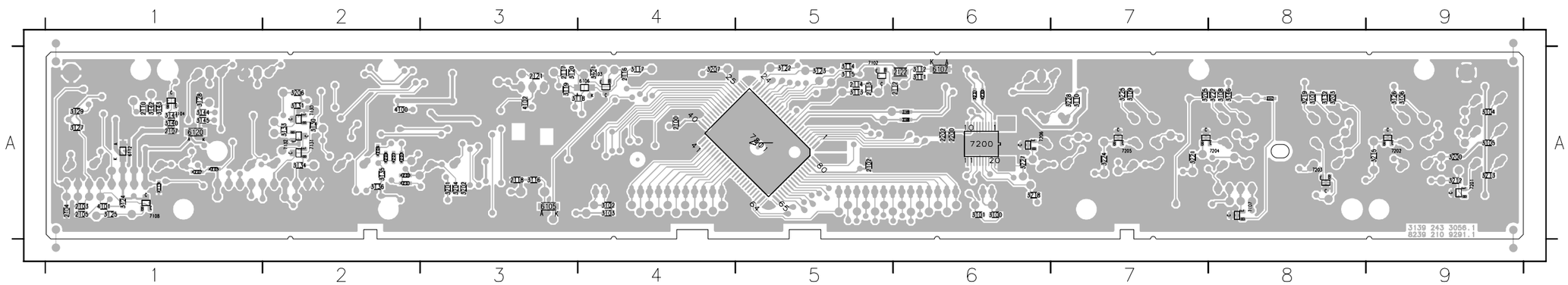

Front (1) Board Testpoint View

I100 A6 I104 A1 I114 A4 I118 A8 I123 A1 I127 A1 I133 A2 I140 A9 I144 A7 I148 A5 I152 A5 I156 A1 I160 A4 I164 A8 I168 A2 I172 A4 I176 A4 I180 A4 I184 A5 I188 A5 I192 A6 I196 A6 I202 A9 I206 A6 I213 A7
I101 A6 I110 A6 I115 A4 I120 A1 I124 A1 I130 A2 I134 A2 I141 A9 I145 A7 I149 A4 I153 A3 I157 A3 I161 A2 I165 A8 I169 A2 I173 A4 I177 A4 I181 A4 I185 A5 I189 A5 I193 A6 I197 A9 I203 A6 I210 A9 I214 A7
I102 A4 I111 A5 I116 A1 I121 A1 I125 A1 I131 A2 I135 A2 I142 A8 I146 A5 I150 A8 I154 A1 I158 A5 I162 A8 I166 A7 I170 A2 I174 A4 I178 A4 I182 A4 I186 A5 I190 A6 I194 A6 I198 A3 I204 A7 I211 A9 I215 A6
I103 A4 I113 A4 I117 A8 I122 A1 I126 A1 I132 A2 I136 A1 I143 A8 I147 A5 I151 A5 I155 A3 I159 A5 I163 A2 I167 A9 I171 A1 I175 A4 I179 A4 I183 A5 I187 A5 I191 A6 I195 A6 I200 A9 I205 A7 I212 A8

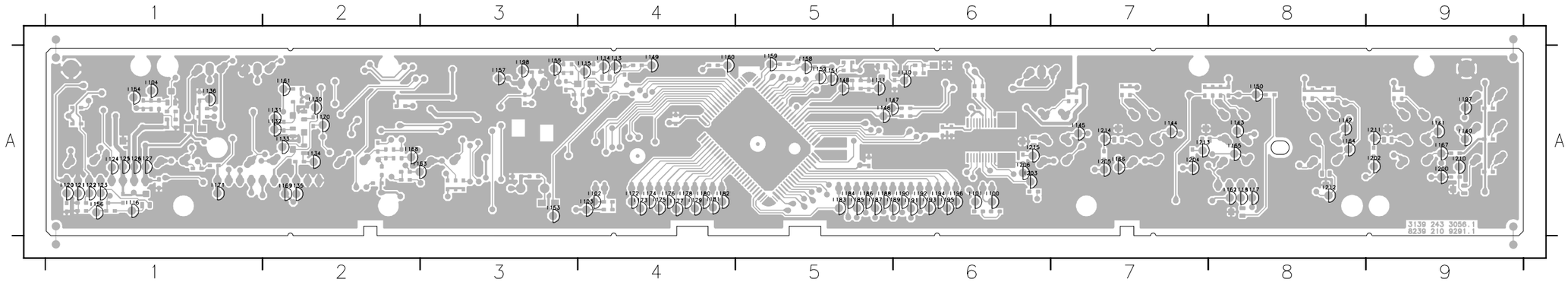

■ PRINTED CIRCUIT BOARD

Front (2) Board Top View

1400 A2 1410 A1 1420 A2

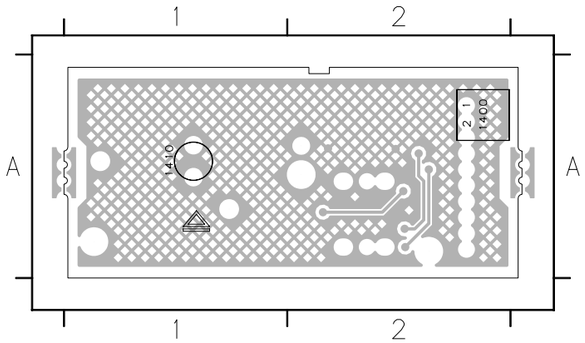

Front (3) Board Top View

1300 A1 1310 A1 6300 A1

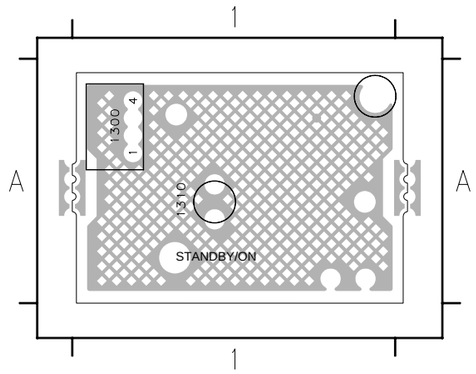

Front (2) Board Bottom View

1400 A1 1410 A2 1420 A1

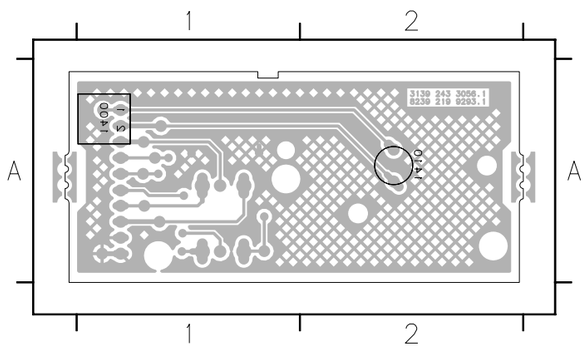

Front (3) Board Bottom View

3300 A1 4300 A1

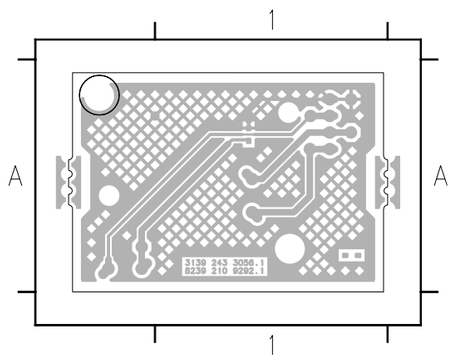

Front (2) Board Testpoint View

1400 A1 1402 A1 1405 A1 1407 A1 1409 A1
1401 A1 1403 A1 1406 A1 1408 A1

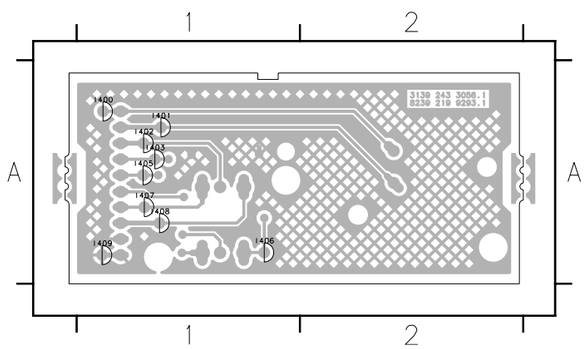

Front (3) Board Testpoint View

1300 A1 1302 A1 1304 A1
1301 A1 1303 A1

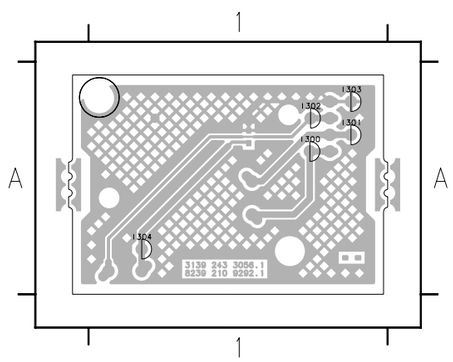

■ PRINTED CIRCUIT BOARD

Motor Driver Board Top View

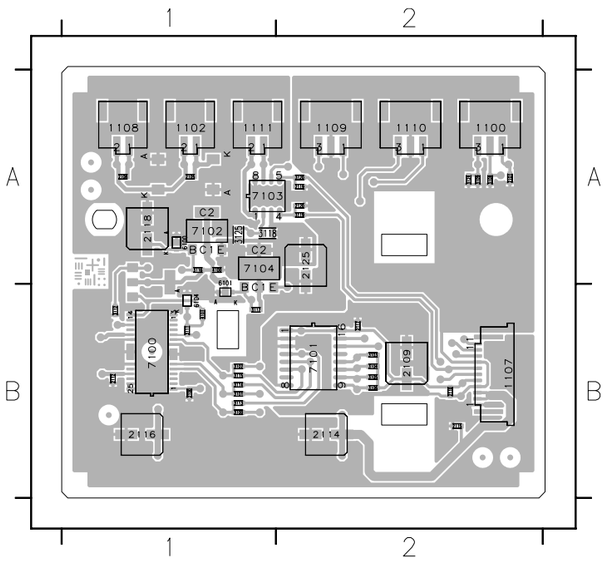

1100	A2	6102	A1
1102	A1	6103	A1
1107	B2	6104	B1
1108	A1	7100	B1
1109	A2	7101	B2
1110	A2	7102	A1
1111	A1	7103	A1
2100	B1	7104	A1
2101	A2	7105	A1
2105	A1		
2108	A1		
2109	B2		
2110	B2		
2112	B1		
2114	B2		
2115	B2		
2116	B1		
2117	B2		
2118	A1		
2119	A2		
2120	A2		
2125	A2		
3100	B1		
3101	B1		
3102	B1		
3103	B2		
3104	B2		
3105	B2		
3106	B2		
3108	A2		
3109	A2		
3111	B1		
3112	B1		
3113	B1		
3114	B1		
3115	B1		
3116	A1		
3117	B1		
3118	A1		
3119	A2		
3120	A2		
3124	A2		
3125	A1		
4100	A1		
4101	B1		
6100	A1		
6101	A1		

Motor Driver Board Testpoint View

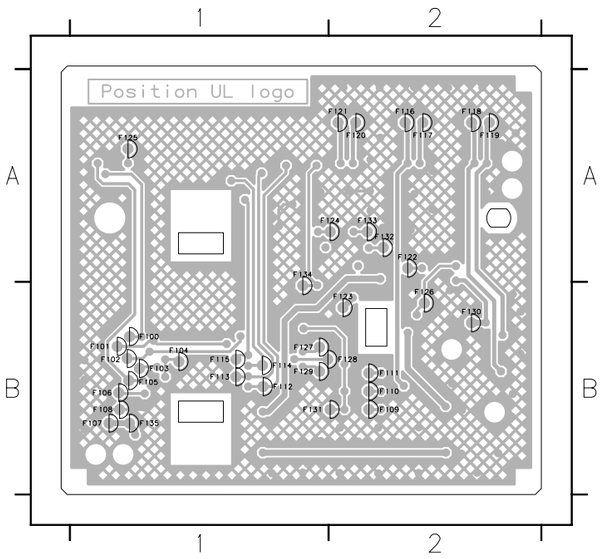

F100	B1		
F101	B1		
F102	B1		
F103	B1		
F104	B1		
F105	B1		
F106	B1		
F107	B1		
F108	B1		
F109	B2		
F110	B2		
F111	B2		
F112	B1		
F113	B1		
F114	B1		
F115	B1		
F116	A2		
F117	A2		
F118	A2		
F119	A2		
F120	A2		
F121	A2		
F122	A2		
F123	B2		
F124	A2		
F125	A1		
F126	B2		
F127	B1		
F128	B1		
F129	B1		
F130	B2		
F131	B2		
F132	A2		
F133	A2		
F134	B1		
F135	B1		

CM-PH1 (1) Board Bottom View

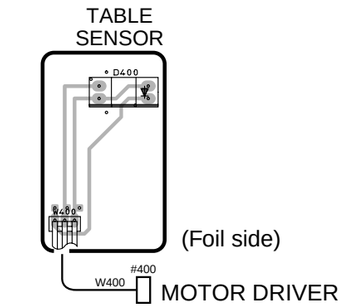

CM-PH1 (2) Board Bottom View

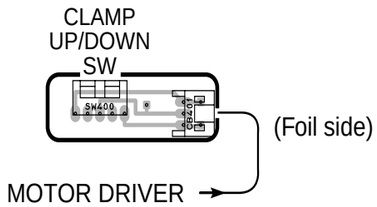

CM-PH1 (3) Board Bottom View

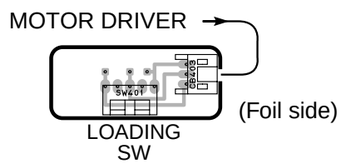

■ SCHEMATIC DIAGRAM (CM-PH1)

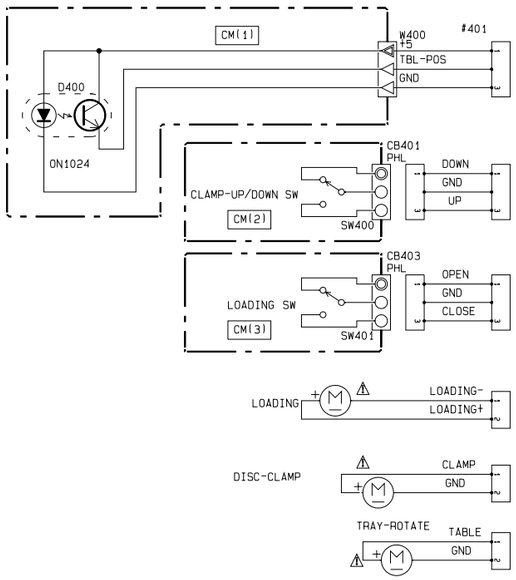

CAPACITOR

REMARKS	PARTS NAME	
NO MARK	ELECTROLYTIC CAPACITOR	⇶
⊗	TANTALUM CAPACITOR	
NO MARK	CERAMIC CAPACITOR	⫼
◉	CERAMIC TUBULAR CAPACITOR	
◎	POLYESTER FILM CAPACITOR	
○	POLYSTYRENE FILM CAPACITOR	
Ⓘ	MICA CAPACITOR	
Ⓟ	POLYPROPYLENE FILM CAPACITOR	
⊛	SEMICONDUCTIVE CERAMIC CAPACITOR	

RESISTOR

REMARKS	PARTS NAME
NO MARK	CARBON FILM RESISTOR (P=5)
◪	CARBON FILM RESISTOR (P=10)
△	METAL OXIDE FILM RESISTOR
◬	METAL FILM RESISTOR
⊠	METAL PLATE RESISTOR
◪	FIRE PROOF CARBON FILM RESISTOR
□	CEMENT MOLDED RESISTOR
⊘	SEMI VARIABLE RESISTOR
▤	CHIP RESISTOR

NOTICE (model)
(J)····· JAPANESE
(U)····· U.S.A
(C)····· CANADIAN
(R)····· GENERAL
(A)····· AUSTRALIAN
(B)····· BRITISH
(G)····· EUROPEAN
(T)····· CHINA
(L)····· SINGAPORE

* Components having special characteristics are marked ⚠ and must be replaced with parts having specifications equal to those originally installed.
* Schematic diagram is subject to change without notice.

PARTS LIST

■ ELECTRICAL PARTS

■ WARNING
Components having special characteristics are marked ⚠ and must be replaced with parts having specifications equal to those originally installed.

ABBREVIATIONS IN THIS LIST ARE AS FOLLOWS :

C.A.EL.CHP	:	CHIP ALUMI. ELECTROLYTIC CAP
C.CE	:	CERAMIC CAP
C.CE.ARRAY	:	CERAMIC CAP ARRAY
C.CE.CHP	:	CHIP CERAMIC CAP
C.CE.ML	:	MULTILAYER CERAMIC CAP
C.CE.M.CHP	:	CHIP MULTILAYER CERAMIC CAP
C.CE.SAFTY	:	RECOGNIZED CERAMIC CAP
C.CE.TUBLR	:	CERAMIC TUBULAR CAP
C.CE.SMI	:	SEMI CONDUCTIVE CERAMIC CAP
C.EL	:	ELECTROLYTIC CAP
C.MICA	:	MICA CAP
C.ML.FLM	:	MULTILAYER FILM CAP
C.MP	:	METALLIZED PAPER CAP
C.MYLAR	:	MYLAR FILM CAP
C.MYLAR.ML	:	MULTILAYER MYLAR FILM CAP
C.PAPER	:	PAPER CAPACITOR
C.PLS	:	POLYSTYRENE FILM CAP
C.POL	:	POLYESTER FILM CAP
C.POLY	:	POLYETHYLENE FILM CAP
C.PP	:	POLYPROPYLENE FILM CAP
C.TNTL	:	TANTALUM CAP
C.TNTL.CHP	:	CHIP TANTALUM CAP
C.TRIM	:	TRIMMER CAP
CN	:	CONNECTOR
CN.BS.PIN	:	CONNECTOR, BASE PIN
CN.CANNON	:	CONNECTOR, CANNON
CN.DIN	:	CONNECTOR, DIN
CN.FLAT	:	CONNECTOR, FLAT CABLE
CN.POST	:	CONNECTOR, BASE POST
COIL.MX.AM	:	COIL, AM MIX
COIL.AT.FM	:	COIL, FM ANTENNA
COIL.DT.FM	:	COIL, FM DETECT
COIL.MX.FM	:	COIL, FM MIX
COIL.OUTPT	:	OUTPUT COIL
DIOD.ARRAY	:	DIODE ARRAY
DIODE.BRG	:	DIODE BRIDGE
DIODE.CHP	:	CHIP DIODE
DIODE.SHOT	:	SCHOTTKY BARRIER DIODE
DIODE.VAR	:	VARACTOR DIODE
DIOD.Z.CHP	:	CHIP ZENER DIODE
DIODE.ZENR	:	ZENER DIODE
DSCR.CE	:	CERAMIC DISCRIMINATOR
FER.BEAD	:	FERRITE BEADS
FER.CORE	:	FERRITE CORE
FET.CHP	:	CHIP FET
FL.DSPLY	:	FLUORESCENT DISPLAY
FLTR.CE	:	CERAMIC FILTER
FLTR.COMB	:	COMB FILTER MODULE
FLTR.LC.RF	:	LC FILTER ,EMI
GND.MTL	:	GROUND PLATE
GND.TERM	:	GROUND TERMINAL
HOLDER.FUS	:	FUSE HOLDER
IC.PRTCT	:	IC PROTECTOR
JUMPER.CN	:	JUMPER CONNECTOR
JUMPER.TST	:	JUMPER, TEST POINT
L.DTCT	:	LIGHT DETECTING MODULE
L.EMIT	:	LIGHT EMITTING MODULE
LED.DSPLY	:	LED DISPLAY
LED.INFRD	:	LED, INFRARED
MODUL.RF	:	MODULATOR, RF
PHOT.CPL	:	PHOTO COUPLER
PHOT.INTR	:	PHOTO INTERRUPTER
PHOT.RFLCT	:	PHOTO REFLECTOR
PIN.TEST	:	PIN, TEST POINT
PLST.RIVET	:	PLASTIC RIVET
R.ARRAY	:	RESISTOR ARRAY
R.CAR	:	CARBON RESISTOR
R.CAR.CHP	:	CHIP RESISTOR
R.CAR.FP	:	FLAME PROOF CARBON RESISTOR
R.FUS	:	FUSABLE RESISTOR
R.MTL.CHP	:	CHIP METAL FILM RESISTOR
R.MTL.FLM	:	METAL FILM RESISTOR
R.MTL.OXD	:	METAL OXIDE FILM RESISTOR
R.MTL.PLAT	:	METAL PLATE RESISTOR
RSNR.CE	:	CERAMIC RESONATOR
RSNR.CRYS	:	CRYSTAL RESONATOR
R.TW.CEM	:	TWIN CEMENT FIXED RESISTOR
R.WW	:	WIRE WOUND RESISTOR
SCR.BND.HD	:	BIND HEAD B-TITE SCREW
SCR.BW.HD	:	BW HEAD TAPPING SCREW
SCR.CUP	:	CUP TITE SCREW
SCR.TERM	:	SCREW TERMINAL
SCR.TR	:	SCREW, TRANSISTOR
SUPRT.PCB	:	SUPPORT, P.C.B.
SURG.PRTCT	:	SURGE PROTECTOR
SW.TACT	:	TACT SWITCH
SW.LEAF	:	LEAF SWITCH
SW.LEVER	:	LEVER SWITCH
SW.MICRO	:	MICRO SWITCH
SW.PUSH	:	PUSH SWITCH
SW.RT.ENC	:	ROTARY ENCODER
SW.RT.MTR	:	ROTARY SWITCH WITH MOTOR
SW.RT	:	ROTARY SWITCH
SW.SLIDE	:	SLIDE SWITCH
TERM.SP	:	SPEAKER TERMINAL
TERM.WRAP	:	WRAPPING TERMINAL
THRMST.CHP	:	CHIP THERMISTOR
TR.CHP	:	CHIP TRANSISTOR
TR.DGT	:	DIGITAL TRANSISTOR
TR.DGT.CHP	:	CHIP DIGITAL TRANSISTOR
TRANS	:	TRANSFORMER
TRANS.PULS	:	PULSE TRANSFORMER
TRANS.PWR	:	POWER TRANSFORMER ASS'y
TUNER.AM	:	TUNER PACK, AM
TUNER.FM	:	TUNER PACK, FM
TUNER.PK	:	FRONT-END TUNER PACK
VR	:	ROTARY POTENTIOMETER
VR.MTR	:	POTENTIOMETER WITH MOTOR
VR.SW	:	POTENTIOMETER WITH ROTARY SW
VR.SLIDE	:	SLIDE POTENTIOMETER
VR.TRIM	:	TRIMMER POTENTIOMETER

Note) Those parts marked with “#” are not included in the P.C.B. ass'y.

	Schm Ref.	PART NO.	Description		Remarks	Market
*		AAX47110	P.C.B.	MONO BOARD	3139 248 82441	
*	1201	AAX47720	RSNR.CRYS	SM 8M4672 30P	2422 543 01292	
	2320	UF037470	C.EL.CHP	47uF 16V		
	2321	UF037470	C.EL.CHP	47uF 16V		
	2410	UF038100	C.EL.CHP	100uF 16V		
	2411	UF038100	C.EL.CHP	100uF 16V		
	2417	UF037100	C.EL.CHP	10uF 16V		
	2500	UF017470	C.EL.CHP	47uF 6.3V		
	2525	UF017470	C.EL.CHP	47uF 6.3V		
	2605	UF037100	C.EL.CHP	10uF 16V		
	2607	UF037100	C.EL.CHP	10uF 16V		
	2635	UF066470	C.EL.CHP	4.7uF 50V		
	2636	UF066470	C.EL.CHP	4.7uF 50V		
	2702	UF066220	C.EL.CHP	2.2uF 50V		
	2706	UF038100	C.EL.CHP	100uF 16V		
	2709	UF066220	C.EL.CHP	2.2uF 50V		
	2713	UF038100	C.EL.CHP	100uF 16V		
	2720	UF066220	C.EL.CHP	2.2uF 50V		
	2725	UF066220	C.EL.CHP	2.2uF 50V		
	2728	UF037100	C.EL.CHP	10uF 16V		
	2729	UF038100	C.EL.CHP	100uF 16V		
	2732	UF066220	C.EL.CHP	2.2uF 50V		
	2740	UF038100	C.EL.CHP	100uF 16V		
	2742	UF066220	C.EL.CHP	2.2uF 50V		
	2747	UF037100	C.EL.CHP	10uF 16V		
	2748	UF038100	C.EL.CHP	100uF 16V		
	2751	UF038100	C.EL.CHP	100uF 16V		
	2910	UF037470	C.EL.CHP	47uF 16V		
	2912	UF037470	C.EL.CHP	47uF 16V		
*	6100	AAX47290	DIODE	BAS316	3198 010 10630	
*	6101	AAX47290	DIODE	BAS316	3198 010 10630	
	6300	AAX22690	DIODE.CHP	S1D	9322 128 69685	
	6301	AAX22690	DIODE.CHP	S1D	9322 128 69685	
	6302	AAX22690	DIODE.CHP	S1D	9322 128 69685	
*	6400	AAX47290	DIODE	BAS316	3198 010 10630	
*	7100	AAX47490	TR	BC847BPN	9340 425 30115	
*	7101	AAX46630	IC	MC34072D	9322 047 15668	
*	7102	AAX46640	IC	L78L05ACD	9322 068 38668	
*	7103	AAX47380	TR	BC847B	3198 010 42030	
	7105	AAX39570	IC	TZA1033HL/K2	9352 703 49118	
*	7106	AAX46630	IC	MC34072D	9322 047 15668	
*	7107	AAX47420	TR	BC807-25	3198 010 43130	
*	7108	AAX47430	TR	BC817-25	3198 010 43230	
	7109	AAX39450	FET	BST82	9337 331 10215	
*	7110	AAX47450	TR	BFS20	9330 921 11215	
*	7111	AAX47450	TR	BFS20	9330 921 11215	
	7200	AAX39440	FET	IRLML2502	9322 163 27685	
*	7201	AAX47390	TR	BC857B	3198 010 42150	
*	7202	AAX47490	TR	BC847BPN	9340 425 30115	
	7207	AAX39560	IC	SAA7812HL/M3B	9352 681 05557	
	7300	AAX39530	IC	BA6665FM	9322 139 85668	
*	7301	AAX46650	IC	LM833D	9322 068 82668	
*	7303	AAX46670	IC	BA5938FM	9322 128 22668	

* New Parts

	Schm Ref.	PART NO.	Description		Remarks	Market
*	7305	AAX46710	IC	L78M09CDT	9322 136 29668	
*	7400	AAX46690	IC	M24C64-WMN6	9322 130 41668	
*	7404	AAX47380	TR	BC847B	3198 010 42030	
*	7405	AAX47380	TR	BC847B	3198 010 42030	
*	7406	AAX46980	IC	74LVC00APW	9352 499 80118	
*	7409	AAX47380	TR	BC847B	3198 010 42030	
*	7412	AAX46820	IC	NCP301LSN27	9322 178 88685	
*	7413	AAX47390	TR	BC857B	3198 010 42150	
	7500	AAX39540	IC	MT48LC4M16A2TG-7E	9322 166 67668	
*	7508	AAX47480	TR	BC847BS	9340 425 20115	
*	7601	AAX46850	IC	STI5588LVA	9322 188 97671	
*	7700	AAX46610	FET	BSN20	9340 125 00235	
*	7701	AAX47490	TR	BC847BPN	9340 425 30115	
*	7703	AAX46610	FET	BSN20	9340 125 00235	
*	7704	AAX46770	IC	LF33ABDT	9322 172 45668	
*	7705	AAX47490	TR	BC847BPN	9340 425 30115	
*	7707	AAX46760	IC	LD1117ADT18	9322 167 69668	
*	7708	AAX46610	FET	BSN20	9340 125 00235	
*	7709	AAX47490	TR	BC847BPN	9340 425 30115	
*	7710	AAX46610	FET	BSN20	9340 125 00235	
*	7714	AAX47490	TR	BC847BPN	9340 425 30115	
*	7716	AAX46700	IC	LD1117DT33	9322 134 45668	
*	7717	AAX47490	TR	BC847BPN	9340 425 30115	
*	7719	AAX46700	IC	LD1117DT33	9322 134 45668	
	7720	AAX29510	IC	74HCT1G125	9352 456 80115	
*	7721	AAX47490	TR	BC847BPN	9340 425 30115	
	7903	AAX39920	RSNR.CRYS	27MHz 2560TK-2	2722 171 08763	
*		AAX47040	P.C.B.	AV	3139 248 82051	
*	1000	AAX47540	JACK.PIN	6P	2422 026 05324	
*	1001	AAX47550	JACK.PIN	3P	2422 026 05351	
*	1003	AAX47120	TERM	4P	2422 026 05188	
*	1004	AAX47510	JACK.PIN	1P	2422 026 04378	
*	1200	AAX47280	SW.SLIDE	1P	2422 127 00476	
	2110	UR867100	C.EL	10uF 50V		
	2200	UR848100	C.EL	100uF 25V		
	2206	UR848100	C.EL	100uF 25V		
	2215	UR867100	C.EL	10uF 50V		
	2219	UR847470	C.EL	47uF 25V		
*	2221	AAX47500	C.EL	100uF 16V	2020 009 90061	
*	2232	AAX47500	C.EL	100uF 16V	2020 009 90061	
	2300	UR847470	C.EL	47uF 25V		
	2301	UR847470	C.EL	47uF 25V		
	2302	UR867100	C.EL	10uF 50V		
	2303	UR848100	C.EL	100uF 25V		
	2305	UR867100	C.EL	10uF 50V		
	2306	UR848100	C.EL	100uF 25V		
	2308	UR838220	C.EL	220uF 16V		
	2316	UR848100	C.EL	100uF 25V		
*	6300	AAX47290	DIODE	BAS316	3198 010 10630	
*	7200	AAX46880	IC	PCF8574T	9337 280 80118	

* New Parts

	Schm Ref.	PART NO.	Description		Remarks	Market
*	7201	AAX46780	IC	AK4382AVT	9322 177 09685	
*	7202	AAX46650	IC	LM833D	9322 068 82668	
*	7203	AAX46650	IC	LM833D	9322 068 82668	
*	7214	AAX47430	TR	BC817-25	3198 010 43230	
*	7220	AAX47380	TR	BC847B	3198 010 42030	
*	7221	AAX47430	TR	BC817-25	3198 010 43230	
*	7222	AAX47380	TR	BC847B	3198 010 42030	
*	7225	AAX47430	TR	BC817-25	3198 010 43230	
*	7227	AAX47430	TR	BC817-25	3198 010 43230	
*	7229	AAX47430	TR	BC817-25	3198 010 43230	
*	7234	AAX47430	TR	BC817-25	3198 010 43230	
*	7235	AAX47430	TR	BC817-25	3198 010 43230	
*	7236	AAX47430	TR	BC817-25	3198 010 43230	
*	7237	AAX47430	TR	BC817-25	3198 010 43230	
*	7238	AAX47430	TR	BC817-25	3198 010 43230	
*	7301	AAX46660	IC	L7908CV	9322 069 79682	
*	7302	AAX46900	IC	L7808CV	9339 208 10682	
*	7303	AAX46870	IC	L7805CV	9335 202 90682	
*	7320	AAX47390	TR	BC857B	3198 010 42150	
*	7321	AAX47390	TR	BC857B	3198 010 42150	
*	7322	AAX47380	TR	BC847B	3198 010 42030	
*	7323	AAX46600	FET	RLML2502 (INR0)	9322 163 53685	
*	7400	AAX47710	CN.PHOT.SN	JFJ1000	9322 175 41687	
*		AAX47080	P.C.B.	FRONT	3139 248 82261	
	1100	AAX39770	BUZZER	PKM13EPY-4002	2422 527 01005	
	1111	AAX23300	RSNR.CRYS	8MHz CSTS	2422 540 98423	
	1200	AAX39710	SW.TACT		2422 128 02742	
	1201	AAX39710	SW.TACT		2422 128 02742	
	1202	AAX39710	SW.TACT		2422 128 02742	
	1203	AAX39710	SW.TACT		2422 128 02742	
	1204	AAX39710	SW.TACT		2422 128 02742	
	1205	AAX39710	SW.TACT		2422 128 02742	
	1206	AAX39710	SW.TACT		2422 128 02742	
	1207	AAX39710	SW.TACT		2422 128 02742	
	1208	AAX39710	SW.TACT		2422 128 02742	
	1209	AAX39710	SW.TACT		2422 128 02742	
	1310	AAX39710	SW.TACT		2422 128 02742	
	1410	AAX39710	SW.TACT		2422 128 02742	
	2101	UF038100	C.EL.CHP	100uF 16V		
*	2106	AAX47340	C.EL.CHP	22uF 35V	3198 030 72290	
*	2108	AAX47340	C.EL.CHP	22uF 35V	3198 030 72290	
*	2109	AAX47340	C.EL.CHP	22uF 35V	3198 030 72290	
*	2115	AAX47340	C.EL.CHP	22uF 35V	3198 030 72290	
	2120	UF038100	C.EL.CHP	100uF 16V		
*	6100	AAX47020	LED	LTL-816YE	9322 184 08676	
*	6101	AAX47020	LED	LTL-816YE	9322 184 08676	
*	6102	AAX47020	LED	LTL-816YE	9322 184 08676	
*	6103	AAX47020	LED	LTL-816YE	9322 184 08676	
*	6104	AAX47020	LED	LTL-816YE	9322 184 08676	
*	6105	AAX47290	DIODE	BAS316	3198 010 10630	

* New Parts

	Schm Ref.	PART NO.	Description		Remarks	Market
*	6107	AAX47290	DIODE	BAS316	3198 010 10630	
*	6111	AAX47020	LED	LTL-816YE	9322 184 08676	
*	6120	AAX47330	DIODE	PDZ6.2B	9340 548 54115	
*	6200	AAX47010	LED	LTL-816GE	9322 183 96676	
*	6201	AAX47010	LED	LTL-816GE	9322 183 96676	
*	6202	AAX47010	LED	LTL-816GE	9322 183 96676	
*	6203	AAX47010	LED	LTL-816GE	9322 183 96676	
*	6204	AAX47010	LED	LTL-816GE	9322 183 96676	
*	6210	AAX47020	LED	LTL-816YE	9322 184 08676	
*	7100	AAX47700	FL.DSPLY	FTD 11-MT-131GNK	3139 240 50281	
	7101	AAX39960	IC	TMP87CH74F-3PG5	3139 240 50271	
*	7102	AAX47400	TR	BC847BW	3198 010 42310	
*	7104	AAX47400	TR	BC847BW	3198 010 42310	
*	7105	AAX47470	TR	BC327-25	9331 795 90126	
*	7106	AAX47460	TR	BC327-25	9331 795 30126	
	7110	AAX39880	L.DTCT	TSOP2236LL1	9322 180 04667	
*	7200	AAX46910	IC	PCF8574TS/F3	9350 847 90118	
*	7201	AAX47410	TR	BC857BW	3198 010 42320	
*	7202	AAX47410	TR	BC857BW	3198 010 42320	
*	7203	AAX47410	TR	BC857BW	3198 010 42320	
*	7204	AAX47410	TR	BC857BW	3198 010 42320	
*	7205	AAX47410	TR	BC857BW	3198 010 42320	
*	7206	AAX47410	TR	BC857BW	3198 010 42320	
*		AAX47090	P.C.B.	MOTOR DRIVER	3139 248 81851	
	2109	UF037470	C.EL.CHP	47uF 16V		
	2114	UF037470	C.EL.CHP	47uF 16V		
	2116	UF038100	C.EL.CHP	100uF 16V		
	2118	UF037470	C.EL.CHP	47uF 16V		
	2125	UF038100	C.EL.CHP	100uF 16V		
*	6100	AAX47310	DIODE	MM3Z9V1	9322 159 70685	
*	6101	AAX47320	DIODE	MM3Z7V5	9322 178 25685	
*	7100	AAX46680	IC	BA6247FP-Y	9322 130 25668	
*	7101	AAX46880	IC	PCF8574T	9337 280 80118	
*	7102	AAX47440	TR	BCP56	9322 169 63685	
*	7103	AAX46810	IC	BA6287F	9322 178 38668	
*	7104	AAX47440	TR	BCP56	9322 169 63685	
*		V9128000	P.C.B.	CM-PH1		
	CB401	VB858200	CN.BS.PIN	3P		
	CB403	VB858200	CN.BS.PIN	3P		
	D400	V2363400	PHOT.INTR	ON1024		
	SW400	Vi294000	SW.LEVER	SSCF21		
	SW401	Vi294000	SW.LEVER	SSCF21		

* New Parts

Parts List for Chip Ceramic Capacitors

Value	Part No.	Value	Part No.	Value	Part No.
2pF 50V	US060200	120pF 50V	US062120	0.01uF 50V	US064100
3pF 50V	US060300	150pF 50V	US062150	0.015uF 50V	US064150
5pF 50V	US060500	180pF 50V	US062180	0.022uF 25V	US044220
6pF 50V	US060600	220pF 50V	US062220	0.027uF 50V	UB014270
7pF 50V	US060700	270pF 50V	US062270	0.033uF 16V	US034330
8pF 50V	US060800	330pF 50V	US062330	0.039uF 16V	US034390
10pF 50V	US061100	390pF 50V	US062390	0.047uF 16V	US034470
12pF 50V	US061120	470pF 50V	US062470	0.047uF 25V	UB214470
15pF 50V	US061150	560pF 50V	US062560	0.068uF 25V	UB214680
18pF 50V	US061180	680pF 50V	US062680	0.1uF 25V	UB215100
20pF 50V	US061200	820pF 50V	US062820	0.1uF 25V	UB245100
22pF 50V	US061220	1000pF 50V	US063100	0.15uF 25V	UB245150
24pF 50V	US061240	1200pF 50V	US063120	0.22uF 25V	UB245220
27pF 50V	US061270	1500pF 50V	US063150	0.22uF 16V	US135220
33pF 50V	US061330	1800pF 50V	US063180	0.33uF 16V	US135330
39pF 50V	US061390	2200pF 50V	US063220	0.33uF 16V	UB445330
43pF 50V	US061430	2400p 50V	UB053240	0.47uF 16V	UB445470
47pF 50V	US061470	2700pF 50V	US063270	0.68uF 16V	UB445680
56pF 50V	US061560	3300pF 50V	US063330	0.1uF 16V	US035100
62pF 50V	US061620	3900pF 50V	US063390	0.1uF 16V	US135100
68pF 50V	US061680	4700pF 50V	US063470	0.1uF 16V	UB445100
75pF 50V	US061750	5600pF 50V	US063560	1uF 16V	UB446100
82pF 50V	UB051820	6800pF 50V	US063680		
100pF 50V	US062100	8200pF 50V	US063820		

Parts List for Chip Carbon Resistors

Value	**1/10W** Type Part No.	Value	**1/10W** Type Part No.	Value	**1/16W** Type Part No.
0 Ω	RD35 0000	4.3 kΩ	RD35 6430	0 Ω	HX61 1040
1.0 Ω	RD35 3100	4.7 kΩ	RD35 6470	1.0 Ω	HX61 0750
2.2 Ω	RD35 3220	5.1 kΩ	RD35 6510	10 Ω	HX61 1160
2.4 Ω	RD35 3240	5.6 kΩ	RD35 6560	47 Ω	HX61 1150
4.7 Ω	RD35 3470	6.2 kΩ	RD35 6620	100 Ω	HX61 0900
10 Ω	RD35 4100	6.8 kΩ	RD35 6680	220 Ω	HX61 0960
22 Ω	RD35 4220	7.5 kΩ	RD35 6750	270 Ω	HX61 1120
27 Ω	RD35 4270	8.2 kΩ	RD35 6820	390 Ω	HX61 0990
33 Ω	RD35 4330	9.1 kΩ	RD35 6910	470 Ω	HX61 0890
39 Ω	RD35 4390	10 kΩ	RD35 7100	560 Ω	HX61 1010
43 Ω	RD35 4430	11 kΩ	RD35 7110	1.0 kΩ	HX61 0910
47 Ω	RD35 4470	12 kΩ	RD35 7120	1.2 kΩ	HX61 1100
51 Ω	RD35 4510	13 kΩ	RD35 7130	1.5 kΩ	HX61 1090
62 Ω	RD35 4620	15 kΩ	RD35 7150	1.8 kΩ	HX61 1050
68 Ω	RD35 4680	16 kΩ	RD35 7160	2.7 kΩ	HX61 1140
75 Ω	RD35 4750	18 kΩ	RD35 7180	3.3 kΩ	HX61 0980
82 Ω	RD35 4820	20 kΩ	RD35 7200	4.7 kΩ	HX61 1080
91 Ω	RD35 4910	22 kΩ	RD35 7220	6.8 kΩ	HX61 1030
100 Ω	RD35 5100	24 kΩ	RD35 7240	10 kΩ	HX61 0920
120 Ω	RD35 5120	27 kΩ	RD35 7270	12 kΩ	HX61 0780
130 Ω	RD35 5130	30 kΩ	RD35 7300	15 kΩ	HX61 0950
150 Ω	RD35 5150	33 kΩ	RD35 7330	18 kΩ	HX61 0770
180 Ω	RD35 5180	36 kΩ	RD35 7360	22 kΩ	HX61 1110
200 Ω	RD35 5200	39 kΩ	RD35 7390	27 kΩ	HX61 1130
220 Ω	RD35 5220	43 kΩ	RD35 7430	30 kΩ	HX61 0810
240 Ω	RD35 5240	47 kΩ	RD35 7470	47 kΩ	HX61 1060
270 Ω	RD35 5270	51 kΩ	RD35 7510	56 kΩ	HX61 1020
300 Ω	RD35 5300	56 kΩ	RD35 7560	62 kΩ	HX61 0790
330 Ω	RD35 5330	62 kΩ	RD35 7620	82 kΩ	HX61 1170
390 Ω	RD35 5390	68 kΩ	RD35 7680	100 kΩ	HX61 0930
430 Ω	RD35 5430	75 kΩ	RD35 7750	120 kΩ	HX61 0940
470 Ω	RD35 5470	82 kΩ	RD35 7820	220 kΩ	HX61 0970
510 Ω	RD35 5510	91 kΩ	RD35 7910	390 kΩ	HX61 1000
560 Ω	RD35 5560	100 kΩ	RD35 8100	560 Ω	HX61 1010
620 Ω	RD35 5620	120 kΩ	RD35 8120	1.0 MΩ	HX61 1070
680 Ω	RD35 5680	150 kΩ	RD35 8150		
820 Ω	RD35 5820	160 kΩ	RD35 8160		
910 Ω	RD35 5910	180 kΩ	RD35 8180		
1.0 kΩ	RD35 6100	200 kΩ	RD35 8200		
1.1 kΩ	RD35 6110	220 kΩ	RD35 8220		
1.2 kΩ	RD35 6120	270 kΩ	RD35 8270		
1.3 kΩ	RD35 6130	300 kΩ	RD35 8300		
1.5 kΩ	RD35 6150	330 kΩ	RD35 8330		
1.6 kΩ	RD35 6160	390 kΩ	RD35 8390		
1.8 kΩ	RD35 6180	430 kΩ	RD35 8430		
2.0 kΩ	RD35 6200	470 kΩ	RD35 8470		
2.2 kΩ	RD35 6220	510 kΩ	RD35 8510		
2.4 kΩ	RD35 6240	680 kΩ	RD35 8680		
2.7 kΩ	RD35 6270	1.0 MΩ	RD35 9100		
3.0 kΩ	RD35 6300	1.5 MΩ	RD35 9150		
3.3 kΩ	RD35 6330	2.2 MΩ	RD35 9220		
3.6 kΩ	RD35 6360	4.7 MΩ	RD35 9470		
3.9 kΩ	RD35 6390	10 MΩ	RD35 A100		

■ EXPLODED VIEW

When disassembling, use the special screw driver with tip shape in figure.

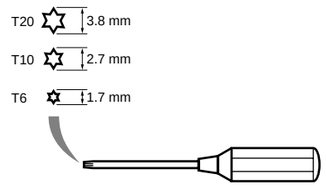

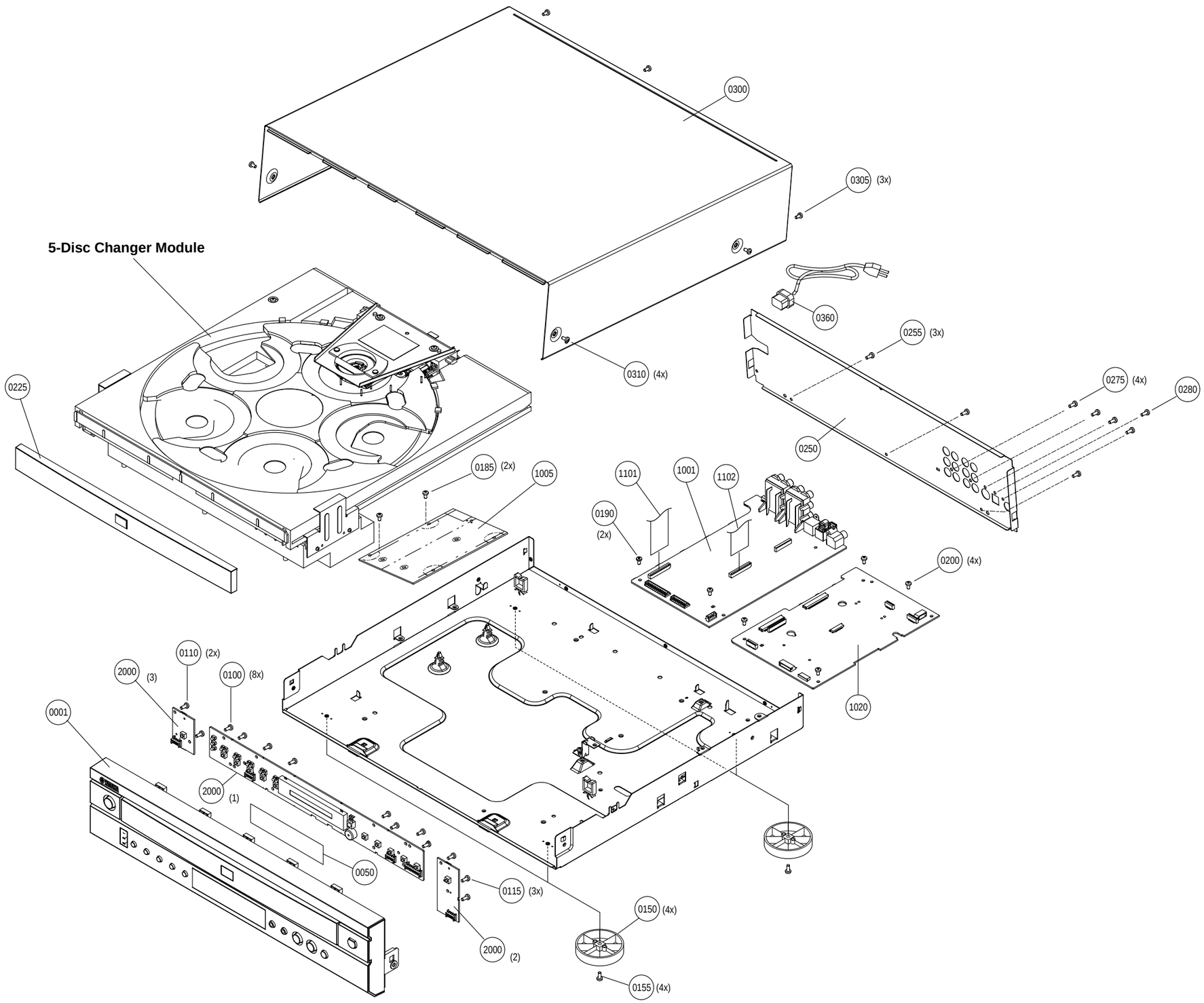

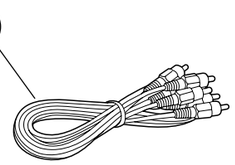

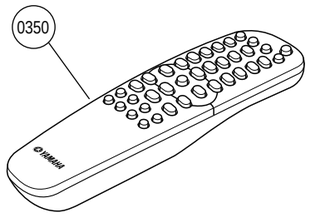

Note) The battery cover is not available

■ MECHANICAL PARTS

	Ref. No.	PART NO.	Description		Remarks	Markets
*	0001	AAX47590	FRONT PANEL ASS'Y	DVD-C740BL	3139 247 56861	U
*	0001	AAX47610	FRONT PANEL ASS'Y	DVD-C740BL	3139 247 58201	A
*	0001	AAX47580	FRONT PANEL ASS'Y	DV-C6660BL	3139 247 56851	U
*	0001	AAX47600	FRONT PANEL ASS'Y	DV-C6660BL	3139 247 58191	A
*	0001	AAX49580	FRONT PANEL ASS'Y	DV-C6660SI	3139 247 58311	U
*	0001	AAX49570	FRONT PANEL ASS'Y	DV-C6660SI	3139 247 58301	A
	0050	AAX39460	FL FILTER		3139 244 80011	
	0100	AAX23630	PAN HEAD TORX P-TITE SCREW	3x10 MFZN2BL	2511 076 50013	
	0110	AAX23630	PAN HEAD TORX P-TITE SCREW	3x10 MFZN2BL	2511 076 50013	
	0115	AAX23630	PAN HEAD TORX P-TITE SCREW	3x10 MFZN2BL	2511 076 50013	
	0150	AAX49600	LEG	C740BL,C6660SI	3139 247 58761	
	0150	AAX49590	LEG	C6660BL	3139 247 58751	
	0155	AAX23640	PAN HEAD TORX P-TITE SCREW	3x6 MFZN2BL	2511 077 00039	
	0185	AAX23640	PAN HEAD TORX S-TITE SCREW	3x6 MFZN2BL	2511 077 00039	
	0190	AAX23640	PAN HEAD TORX S-TITE SCREW	3x6 MFZN2BL	2511 077 00039	
	0200	AAX23640	PAN HEAD TORX S-TITE SCREW	3x6 MFZN2BL	2511 077 00039	
*	0225	AAX47230	COVER TRAY	DVD-C740BL	3139 247 57021	
*	0225	AAX47220	COVER TRAY	DV-C6660BL	3139 247 57011	
*	0225	AAX47240	COVER TRAY	DV-C6660SI	3139 247 58241	
*	0250	AAX47670	REAR PANEL	DVD-C740	3139 247 56801	U
*	0250	AAX47650	REAR PANEL	DVD-C740	3139 247 56771	A
*	0250	AAX47660	REAR PANEL	DV-C6660	3139 247 56791	U
*	0250	AAX47640	REAR PANEL	DV-C6660	3139 247 56761	A
	0255	AAX23640	PAN HEAD TORX S-TITE SCREW	3x6 MFZN2BL	2511 077 00039	
	0275	AAX23630	PAN HEAD TORX P-TITE SCREW	3x10 MFZN2BL	2511 076 50013	
	0280	AAX23640	PAN HEAD TORX S-TITE SCREW	3x6 MFZN2BL	2511 077 00039	
*	0300	AAX47360	TOP COVER	BL	3139 247 57211	
*	0300	AAX47350	TOP COVER	SI	3139 247 56721	
	0305	AAX23640	PAN HEAD TORX S-TITE SCREW	3x6 MFZN2BL	2511 077 00039	
	0305	AAX23650	PAN HEAD TORX S-TITE SCREW	3x6 MFNI33	2511 077 01039	
	0310	AAX23640	PAN HEAD TORX S-TITE SCREW	3x6 MFZN2BL	2511 077 00039	
	0310	AAX23650	PAN HEAD TORX S-TITE SCREW	3x6 MFNI33	2511 077 01039	
⚠*	0360	AAX47750	POWER CABLE	1.8m	2422 070 98235	U
⚠*	0360	AAX47740	POWER CABLE	1.8m	2422 070 98233	A
*	1001	AAX47040	P.C.B. ASS'Y AV	AV C740,C6680	3139 248 82051	
⚠*	1005	AAX47760	POWER SUPPLY UNIT		3122 427 23253	
*	1020	AAX47110	P.C.B. ASS'Y MONO BOARD	MONO BOARD SD5.00C	3139 248 82441	
*	1101	AAX47150	FLEXIBLE FLAT CABLE	30P 80mm P=1mm	3139 241 00251	
*	1102	AAX47140	FLEXIBLE FLAT CABLE	30P 140mm P=1mm	3139 241 00241	
*	2000	AAX47080	P.C.B. ASS'Y FRONT	FRONT C740,C6680	3139 248 82261	
			ACCESSORIES			
*	0350	AAX47680	REMOTE CONTROL	RC19237007/01	3139 228 61241	
	0365	AAX23450	AUDIO/VIDEO CABLE	YE/RD/WH 1.5m 1pc	2422 076 00304	

* New Parts

■ EXPLODED VIEW (5-DISC CHANGER MODULE)

When disassembling, use the special screw driver with tip shape in figure.

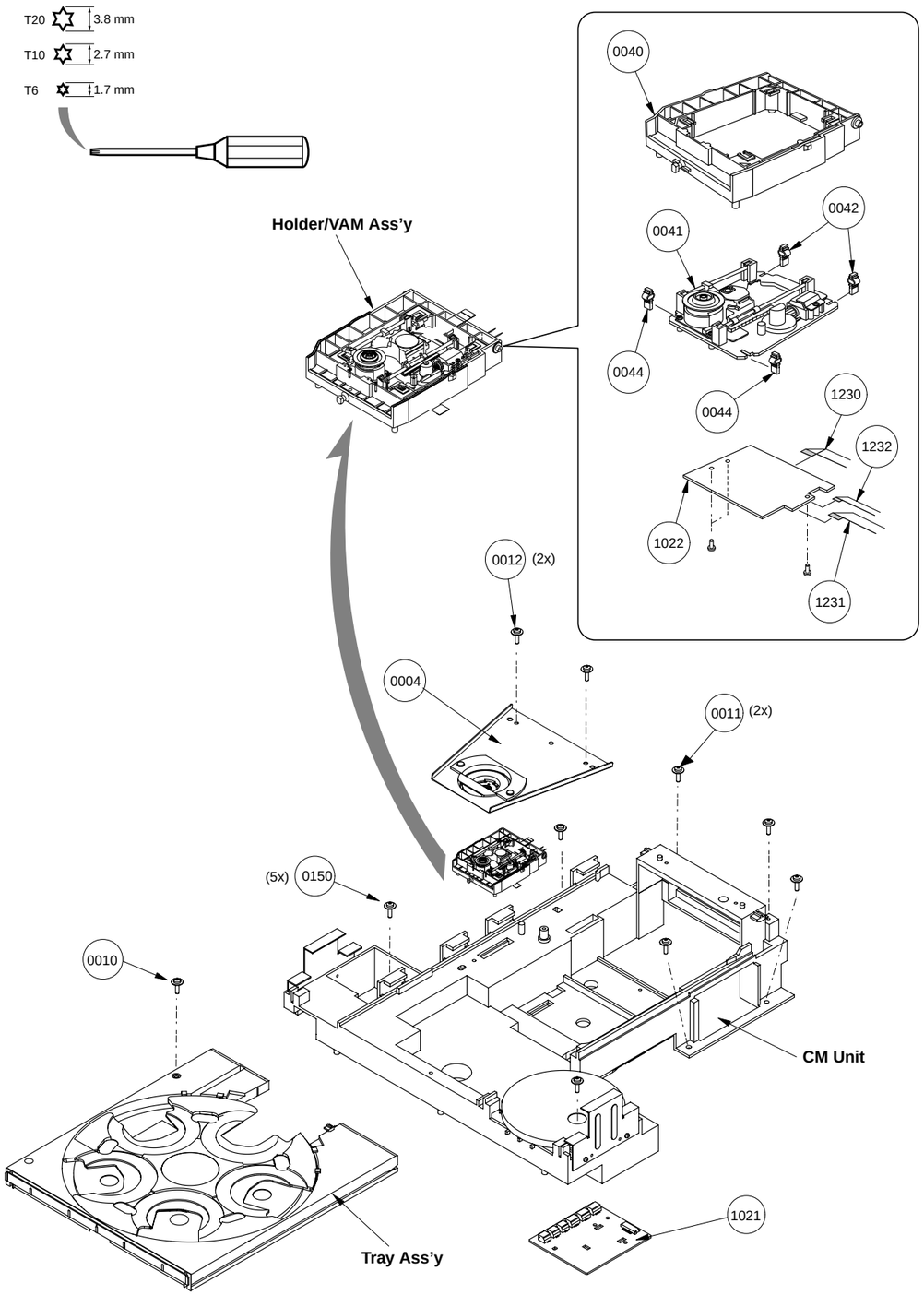

■ MECHANICAL PARTS (5-DISC CHANGER MODULE)

	Ref. No.	PART NO.	Description		Remarks	Markets
			MODULE 5-DISC CHANGER			
*	0004	AAX47250	CLAMPER ASS'Y		3139 247 55731	
	0010	AAX23630	PAN HEAD TORX P-TITE SCREW	3x10 MFZN2BL	2511 076 50013	
	0011	EX602280	PW HEAD P-TITE SCREW	3x12-10 MFZN2BL	3139 240 40011	
	0012	AAX23630	PAN HEAD TORX P-TITE SCREW	3x10 MFZN2BL	2511 076 50013	
*	0040	AAX47370	TRAVERSE HOLDER	VAM 5-DISC CHANGER	3139 244 02172	
*	0041	AAX46590	DVD TRAVERSE MECHANISM	VAM6001/14	9305 022 60114	
*	0042	AAX47260	SUSPENSION		3139 244 02681	
*	0044	AAX47270	SUSPENSION		3139 244 02691	
*	0150	AAX49560	PAN HEAD TORX S-TITE SCREW	4x7 MFZN2BL	3139 240 40001	
*	1022	AAX47050	P.C.B. ASS'Y	HF BUFFER	3139 248 81861	
*	1021	AAX47090	P.C.B. ASS'Y	MOTOR DRIVER	3139 248 81851	
*	1230	AAX47170	FLEXIBLE FLAT CABLE	24P 200mm P=0.5mm	3139 241 00291	
*	1231	AAX47160	FLEXIBLE FLAT CABLE	11P 225mm P=1mm	3139 241 00281	
*	1232	AAX47190	FLEXIBLE FLAT CABLE	8P 180mm P=1mm	3139 241 00311	

* New Parts

■ EXPLODED VIEW (CM UNIT)

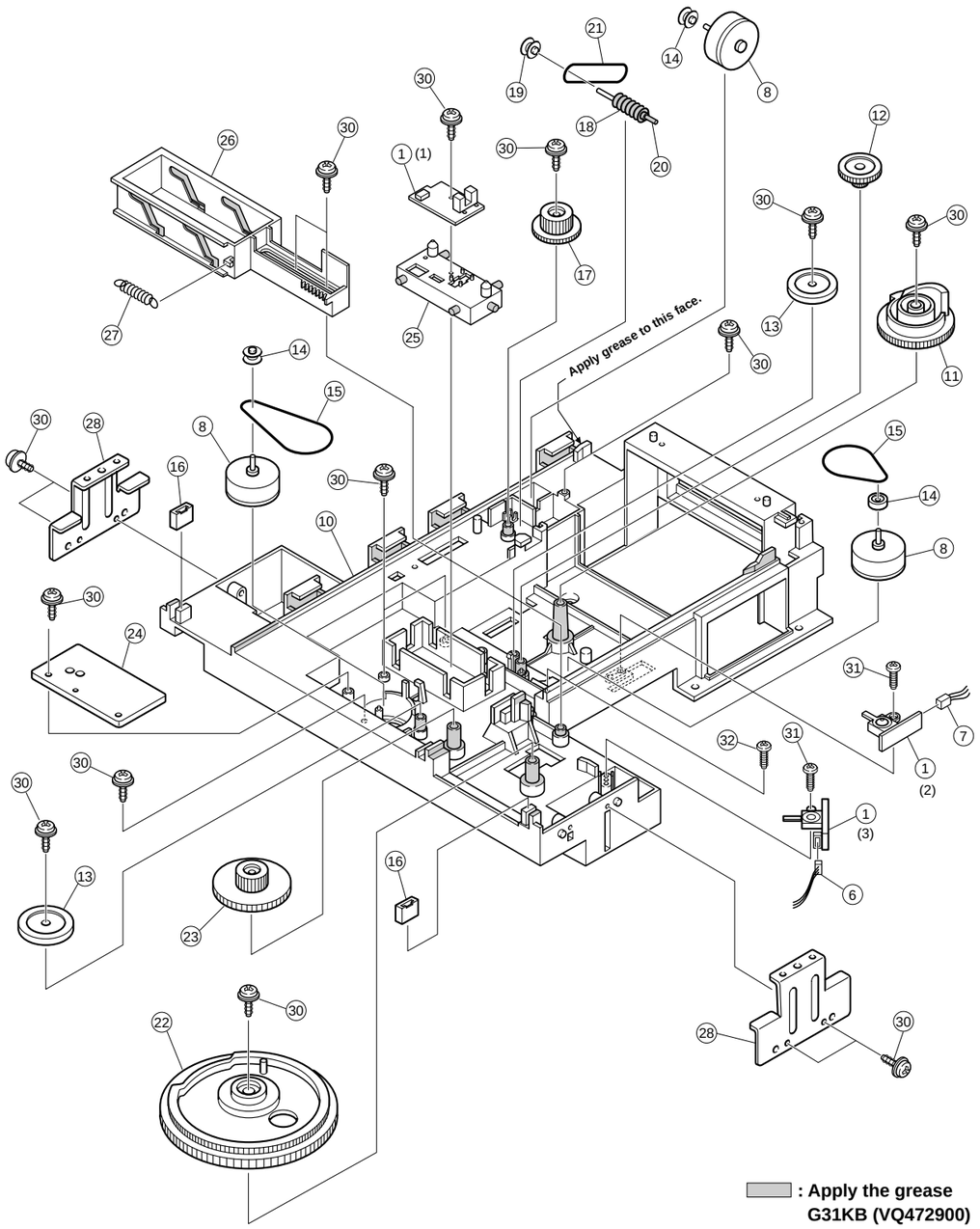

■ MECHANICAL PARTS (CM UNIT)

	Ref. No.	PART NO.	Description			Remarks	Markets
			CM UNIT				
*	1	V9128000	P.C.B. ASS'Y	CM-PH1			
	6	V3175700	CONNECTOR ASS'Y	3P 220mm			
	7	V3175900	CONNECTOR ASS'Y	3P 220mm			
⚠	8	VM444200	MOTOR	RF-500TB-14415			
	10	VZ760500	CHASSIS	B			
	11	VZ760600	CAM, CL				
	12	VS035400	GEAR, CL2				
	13	VS036100	GEAR PULLEY				
	14	VS036200	PULLEY				
	15	VQ776900	BELT	V			
	16	VQ775500	DAMPER, TRAY				
	17	VS035800	GEAR, WW				
	18	VS035700	GEAR				
	19	V2009500	PULLEY, RT				
	20	VS036600	SHAFT, 2				
	21	VS036500	BELT, RT				
	22	VZ760700	GEAR, LO				
	23	VS035300	GEAR, LO1				
	24	VZ760800	SHEET, BELT				
	25	VZ761000	HOLDER, SENSOR				
	26	VZ761200	CAM, SLIDE				
	27	VS036800	SPRING, CAM				
	28	VS037400	SUPPORT, TRAY				
	30	V2296600	PW HEAD P-TITE SCREW	3x8-10	MFZN2BL		
	31	VF617600	PAN HEAD P-TITE SCREW	2.6x8	MFC2BL		
	32	03786010	BIND HEAD SCREW	2.6x5	MFC2BL		

* New Parts

■ EXPLODED VIEW (TRAY ASS'Y)

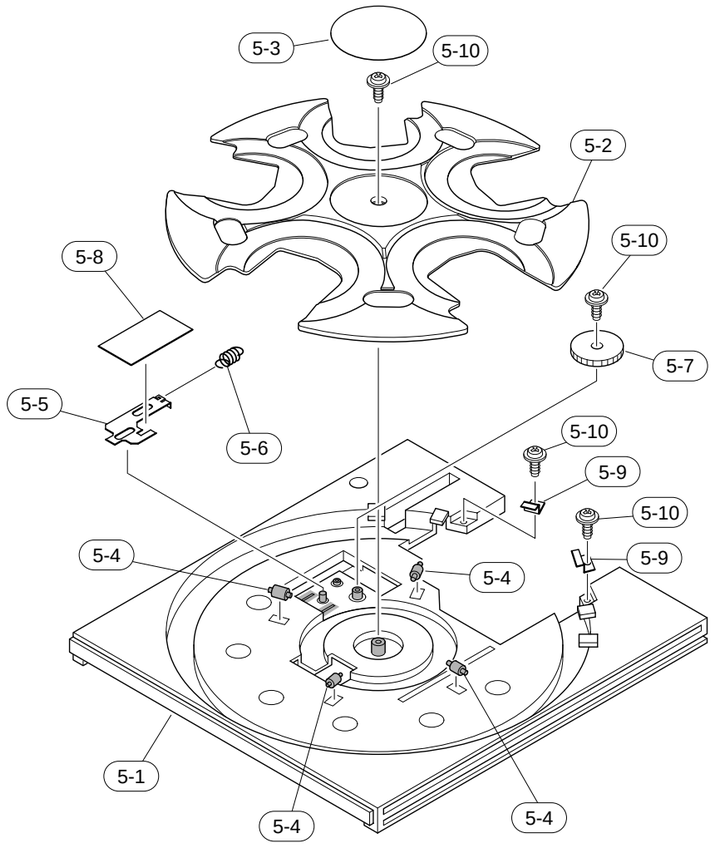

: Apply the grease
G31KB (VQ472900)

	Ref. No.	PART NO.	Description		Remarks	Markets
			TRAY ASS'Y			
	5-1	VZ761500	TRAY	B		
*	5-2	V8931700	TABLE/PH	CM-260PH		
	5-3	V7745300	PLATE/TABLE/D			
	5-4	VS037300	ROLLER			
	5-5	VV014400	LEVER	PO		
	5-6	VS036900	SPRING, RT			
	5-7	VZ761800	GEAR, RT1			
	5-8	VS037900	SHEET, TRAY	B		
	5-9	V6090400	SUPPORT/M			
	5-10	VA775100	PW HEAD P-TITE SCREW	3x8-10 MFCR3BL		

* New Parts

DVD-C740/DV-C6660

YAMAHA

■ SCHEMATIC DIAGRAM (MONO 1/10)

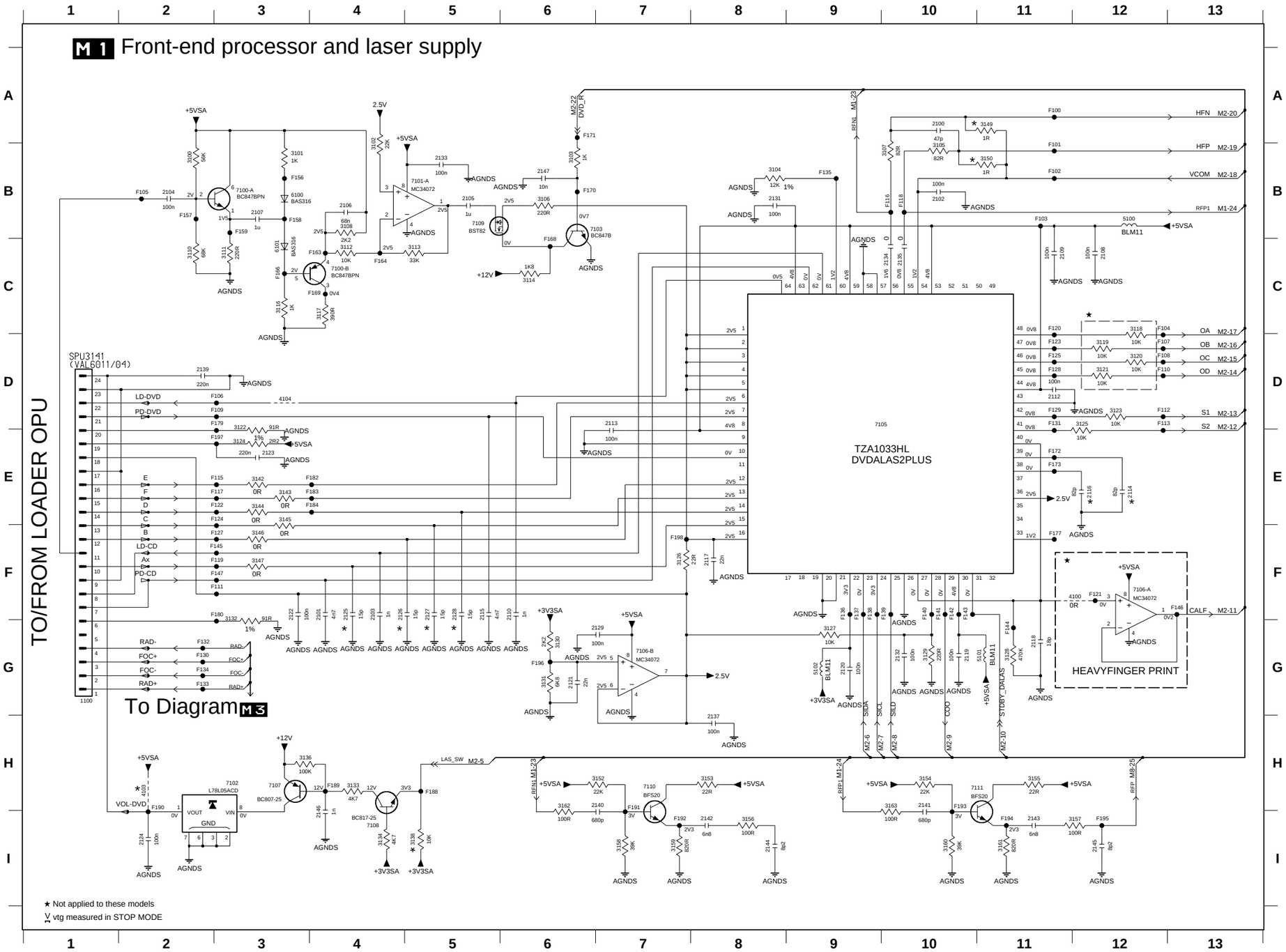

1100 G1
2100 A10
2101 F4
2102 B10
2103 F4
2104 B2
2105 B5
2106 B4
2107 B3
2108 C12
2109 C11
2110 F6
2112 D11
2113 D7
2114 E12
2115 F5
2116 E12
2117 F8
2118 G11
2119 G10
2120 G9
2121 G6
2122 F3
2123 E3
2124 I2
2125 F4
2126 F4
2127 F5
2128 F5
2129 G7
2131 B8
2132 G10
2133 B5
2134 C10
2135 C10
2137 H8
2139 D2
2140 H7
2141 H10
2142 I8
2143 I11
2144 I8
2145 I12
2146 I4
2147 B6
3100 B2
3101 B3
3102 B4
3103 B6
3104 B8
3105 B10
3106 B6
3107 B10
3108 B4
3110 C2
3111 C3
3112 C4
3113 C5
3114 C6
3116 C3
3117 C4
3118 C12
3119 D12
3120 D12
3121 D12
3122 D3
3123 D12
3124 E3
3125 D12
3126 F7
3127 G9
3128 G11
3129 G10
3130 G6
3131 G6
3132 G3
3133 H4
3134 I4
3136 H3
3138 I5
3142 E3
3143 E3
3144 E3
3145 E3
3146 F3
3147 F3
3149 A11
3150 B11
3152 H7
3153 H8
3154 H10
3155 H11
3156 I8
3157 I12
3158 I7
3159 I7
3160 I10
3161 I11
3162 H6
3163 H10
4100 F12
4103 H2
4104 D3
5100 B12
5101 G11
5102 G9
6100 B3
6101 C3
7100-A B3
7100-B C4
7101-A B5
7102 H3
7103 B6
7105 D9
7106-A F12
7106-B G7
7107 H3
7108 I4
7109 B5
7110 H7
7111 H10
F100 A11
F101 B11
F102 B11
F103 B11
F104 C12
F105 B2
F106 D3
F107 D12
F108 D12
F109 D3
F110 D12
F111 F3
F112 D12
F113 D12
F115 E3
F116 B10
F117 E3
F118 B10
F119 F3
F120 C11
F121 F12
F122 E3
F123 D11
F124 E3
F125 D11
F127 F3
F128 D11
F129 D11
F130 G2
F131 D11
F132 G2
F133 G2
F134 G2
F135 B9
F136 F9
F137 F9
F138 F9
F139 F10
F140 F10
F141 F10
F142 F10
F143 F10
F144 G11
F145 F3
F146 F13
F147 F3
F156 B3
F157 B2
F158 B3
F159 B3
F163 C4
F164 C4
F166 C3
F168 B6
F169 C4
F170 B6
F171 A6
F172 E11
F173 E11
F177 F11
F179 D3
F180 F3
F182 E4
F183 E4
F184 E4
F188 H5
F189 H4
F190 H2
F191 H7
F192 I7
F193 H10
F194 I11
F195 I12
F196 G6
F197 E3
F198 F7

* Components having special characteristics are marked ⚠ and must be replaced with parts having specifications equal to those originally installed.
* Schematic diagram is subject to change without notice.

■ SCHEMATIC DIAGRAM (MONO 2/10)

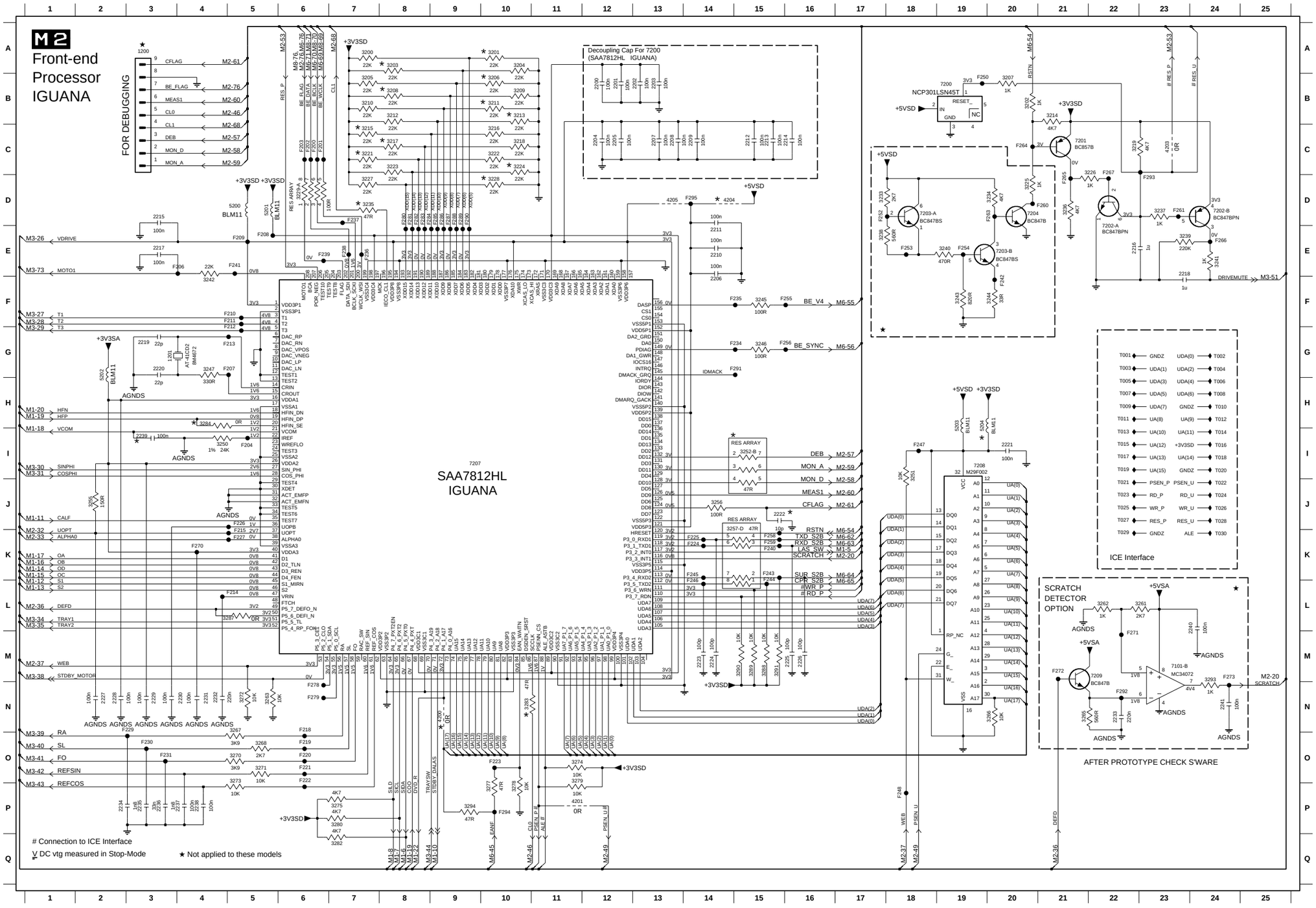

1200 A3	3289 M15	T011 H22			
1201 G3	3290 M15	T012 H24			
2200 B12	3291 M15	T013 I22			
2201 B12	3293 M24	T014 I24			
2202 B13	3294 P9	T015 I22			
2203 B13	4200 N9	T016 I24			
2204 C12	4201 P11	T017 I22			
2205 C12	4203 C23	T018 I24			
2206 F14	4204 D14	T019 I22			
2207 C13	4205 D13	T020 I24			
2208 C13	5200 D5	T021 J22			
2209 C14	5201 D5	T022 J24			
2210 E14	5202 G2	T023 J22			
2211 E14	5203 H19	T024 J24			
2212 C15	5204 H19	T025 J22			
2213 C15	7101-B M23	T026 J24			
2214 C16	7200 B19	T027 J22			
2215 D3	7201 C21	T028 J24			
2216 E22	7202-A E22	T029 K22			
2217 E3	7202-B D24	T030 K24			
2218 E23	7203-A D18				
2219 G3	7203-B E20				
2220 G3	7204 D20				
2221 I20	7207 I9				
2222 J15	7208 I19				
2223 M14	7209 M22				
2224 M14	F200 C6				
2225 M16	F201 C6				
2226 M16	F202 C6				
2227 N2	F203 C6				
2228 N2	F204 I5				
2229 N3	F206 E4				
2230 N4	F207 G5				
2231 N4	F208 E5				
2232 N4	F209 E5				
2233 N22	F210 F5				
2234 P2	F211 F5				
2235 P3	F212 F5				
2236 P3	F213 G5				
2237 P4	F214 L5				
2238 P4	F215 K5				
2239 I3	F218 N6				
2240 L24	F219 O6				
2241 N24	F220 O6				
3200 A7	F221 O6				
3201 A10	F222 O6				
3202 B20	F223 O10				
3203 A8	F224 K14				
3204 A10	F225 K14				
3205 B7	F226 J5				
3206 B10	F227 K5				
3207 B20	F229 N3				
3208 B8	F230 O3				
3209 B10	F231 O3				
3210 B7	F234 G15				
3211 B10	F235 F15				
3212 B8	F236 E7				
3213 B10	F237 D7				
3214 B21	F238 E7				
3215 C7	F239 E6				
3216 C10	F240 K15				
3217 C8	F241 E5				
3218 C10	F242 F20				
3219 C22	F243 K15				
3221 C7	F244 K15				
3222 C10	F245 K14				
3223 C8	F246 K14				
3224 C10	F247 I18				
3225 D20	F248 P18				
3226 C22	F250 B19				
3227 D7	F252 D17				
3228 D10	F253 E18				
3229-A D6	F254 E19				
3233 D17	F255 F16				
3234 D20	F256 G16				
3235 D7	F258 K15				
3236 D21	F259 K15				
3237 D23	F260 D21				
3238 E17	F261 D23				
3239 E23	F263 D20				
3240 E19	F264 C20				
3241 E24	F265 D21				
3242 F4	F266 E24				
3243 F19	F267 C22				
3244 F20	F270 K4				
3245 F15	F271 L22				
3246 G15	F272 M21				
3247 G4	F273 M24				
3250 I4	F278 N6				
3251 I18	F279 N6				
3252-B I15	F280 D8				
3255 J2	F281 D8				
3256 J14	F282 D8				
3257-D K15	F283 D8				
3261 L23	F284 D9				
3262 L22	F285 D9				
3263 N5	F286 D9				
3265 N21	F287 D9				
3266 N20	F288 D9				
3267 N5	F289 D9				
3268 O5	F290 D9				
3270 O5	F291 G15				
3271 O5	F292 N22				
3272 N5	F293 D23				
3273 O5	F294 P10				
3274 O11	F295 D14				
3275 P7	T001 G22				
3277 P10	T002 G24				
3278 P10	T003 G22				
3279 O11	T004 G24				
3280 P7	T005 H22				
3282 Q7	T006 H24				
3283 N10	T007 H22				
3284 H4	T008 H24				
3287 L5	T009 H22				
3288 M15	T010 H24				

* Components having special characteristics are marked ⚠ and must be replaced with parts having specifications equal to those originally installed.

* Schematic diagram is subject to change without notice.

■ SCHEMATIC DIAGRAM (MONO 3/10)

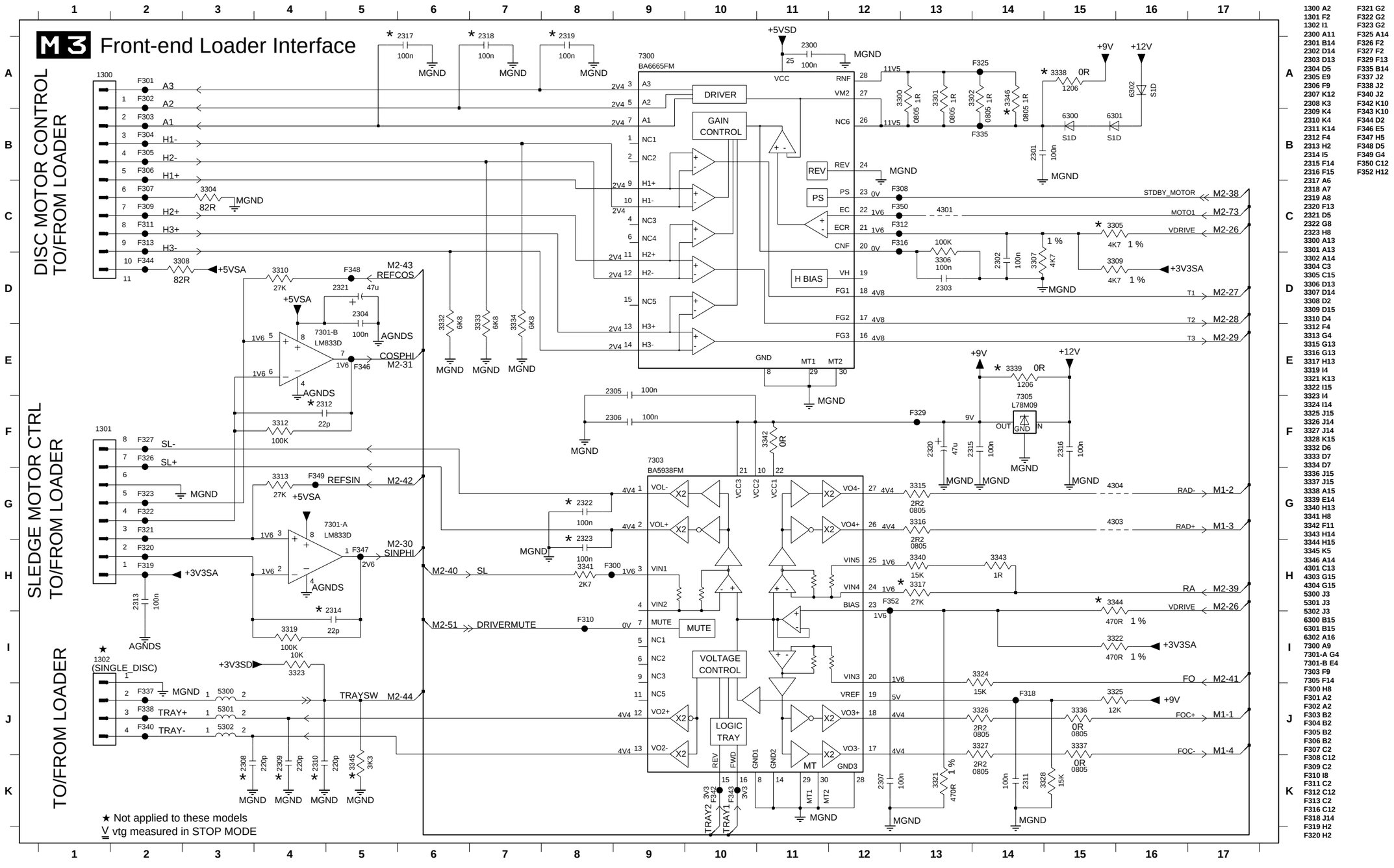

* Components having special characteristics are marked ⚠ and must be replaced with parts having specifications equal to those originally installed.

* Schematic diagram is subject to change without notice.

■ SCHEMATIC DIAGRAM (MONO 4/10)

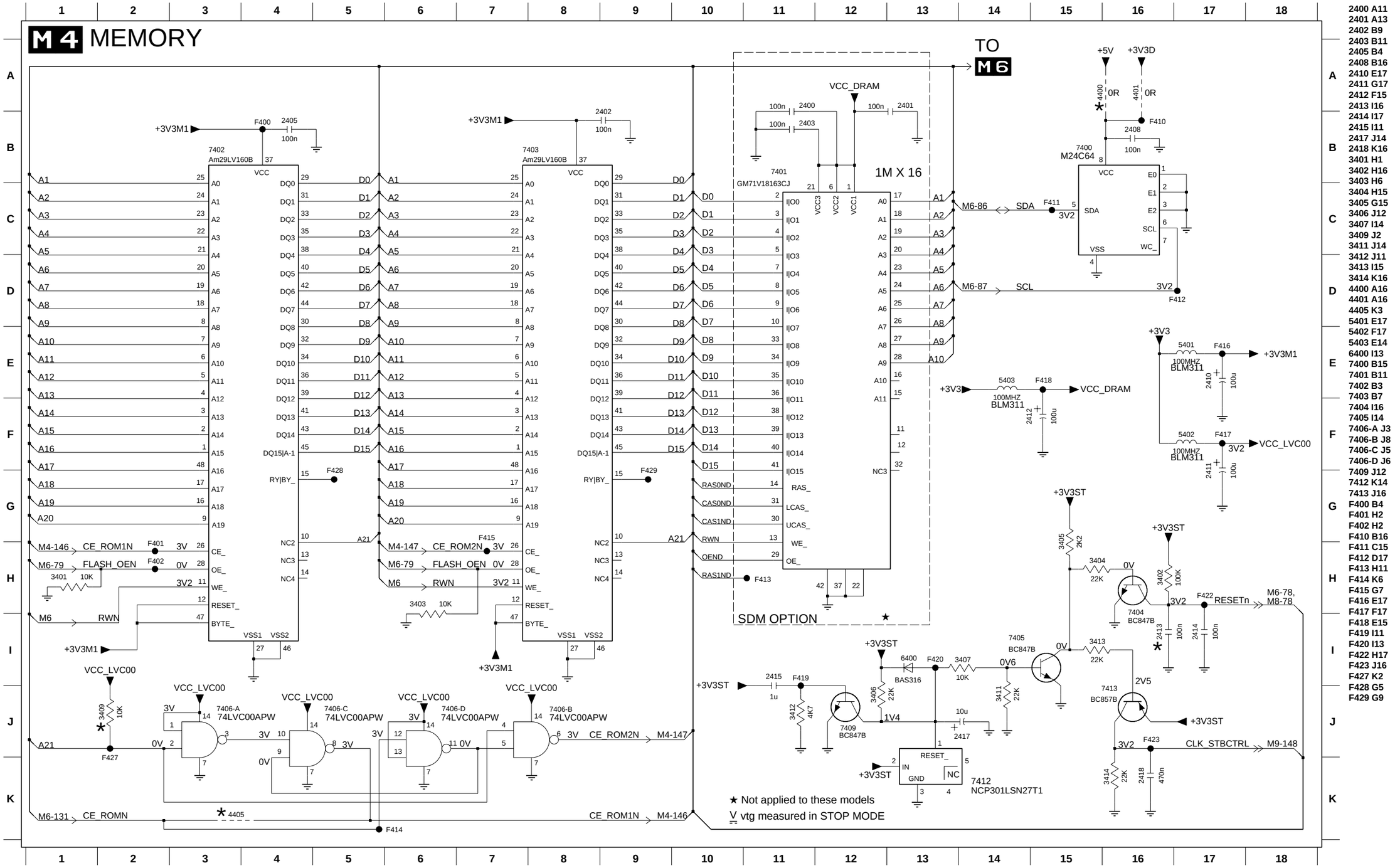

2400 A11
2401 A13
2402 B9
2403 B11
2405 B4
2408 B16
2410 E17
2411 G17
2412 F15
2413 I16
2414 I17
2415 I11
2417 J14
2418 K16
3401 H1
3402 H16
3403 H6
3404 H15
3405 G15
3406 J12
3407 I14
3409 J2
3411 J14
3412 J11
3413 I15
3414 K16
4400 A16
4401 A16
4405 K3
5401 E17
5402 F17
5403 E14
6400 I13
7400 B15
7401 B11
7402 B3
7403 B7
7404 I16
7405 I14
7406-A J3
7406-B J8
7406-C J5
7406-D J6
7409 J12
7412 K14
7413 J16
F400 B4
F401 H2
F402 H2
F410 B16
F411 C15
F412 D17
F413 H11
F414 K6
F415 G7
F416 E17
F417 F17
F418 E15
F419 I11
F420 I13
F422 H17
F423 J16
F427 K2
F428 G5
F429 G9

* Components having special characteristics are marked ⚠ and must be replaced with parts having specifications equal to those originally installed.
* Schematic diagram is subject to change without notice.

■ SCHEMATIC DIAGRAM (MONO 5/10)

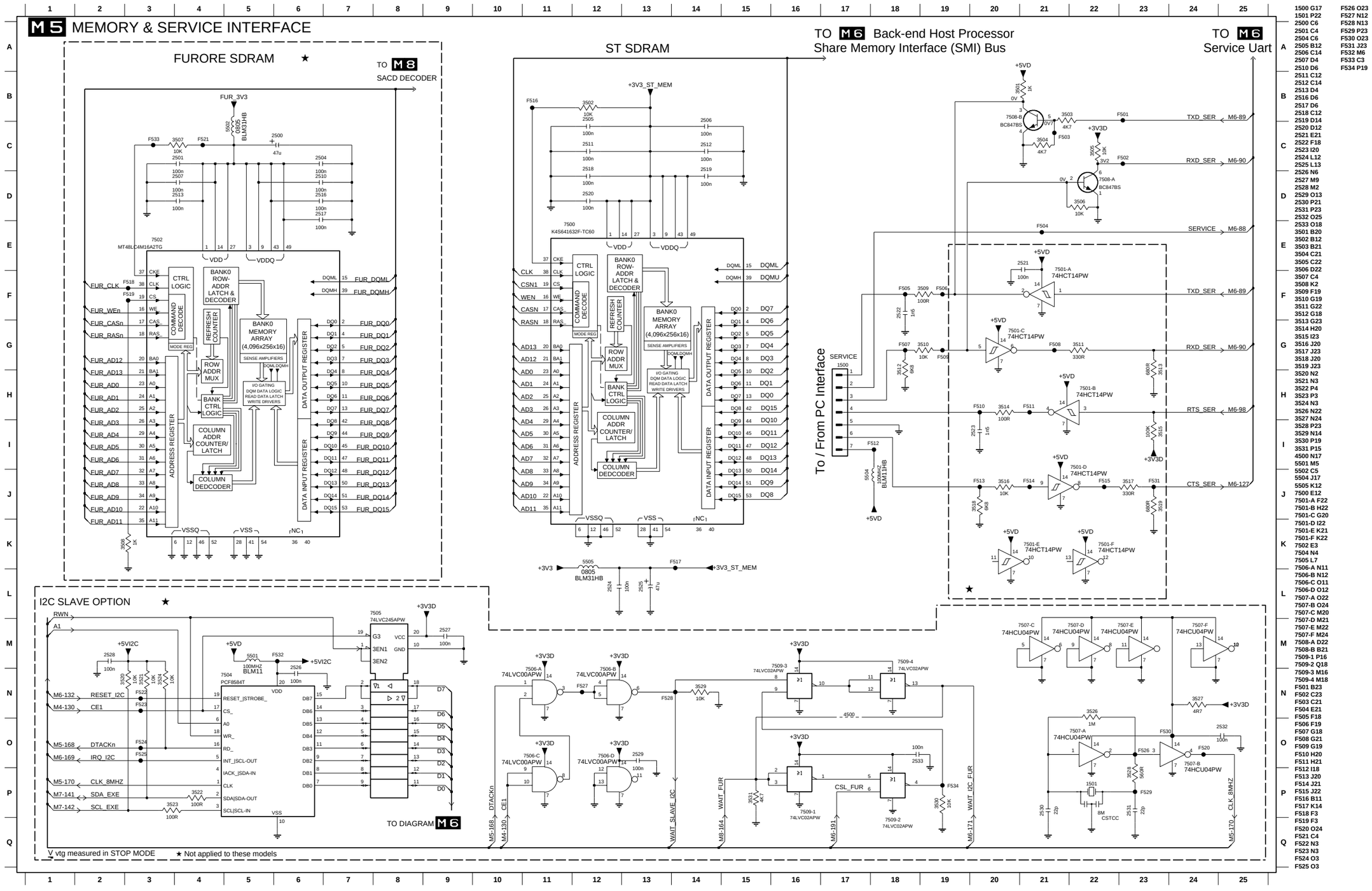

* Components having special characteristics are marked ⚠ and must be replaced with parts having specifications equal to those originally installed.

* Schematic diagram is subject to change without notice.

■ SCHEMATIC DIAGRAM (MONO 6/10)

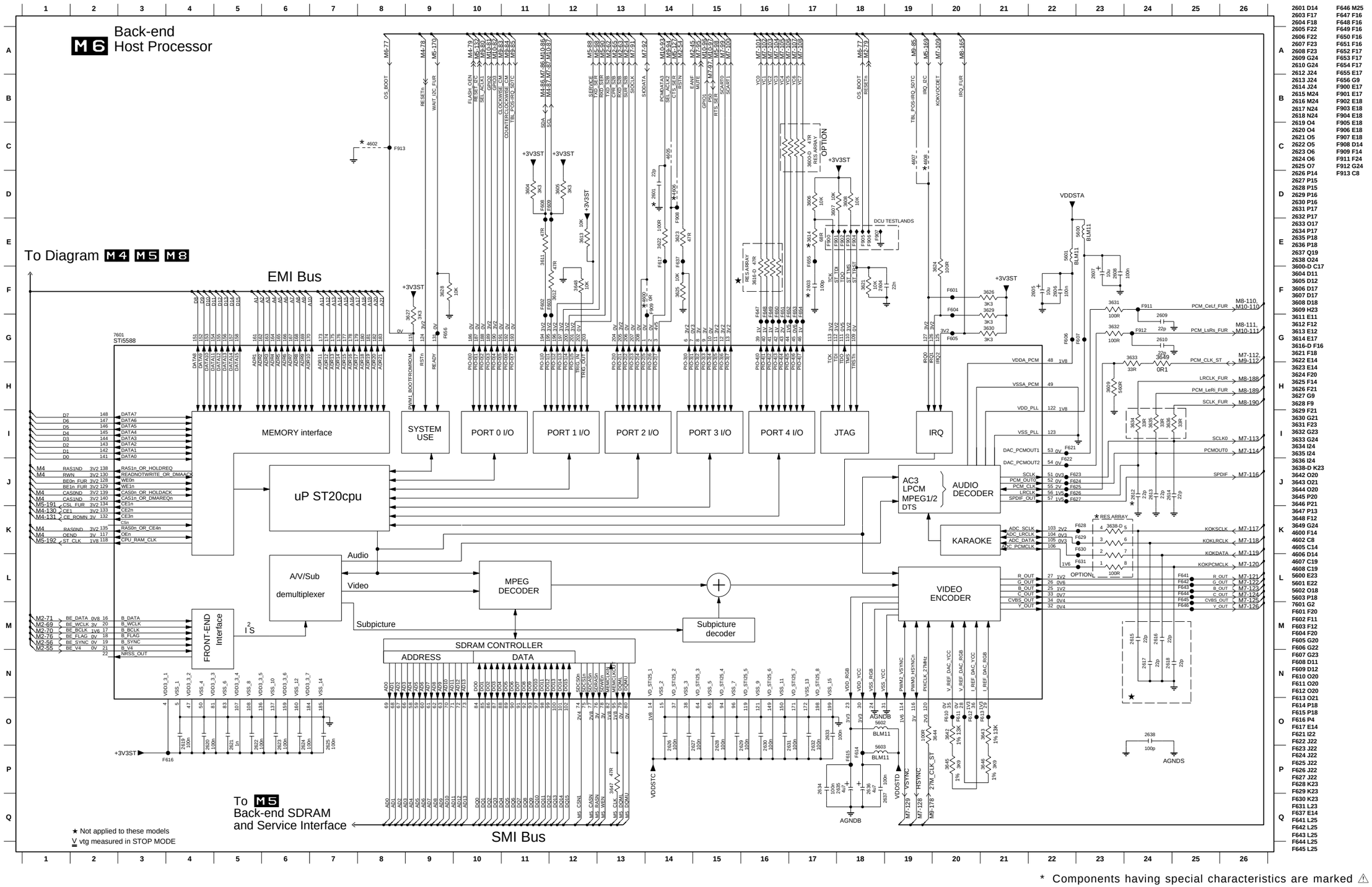

* Components having special characteristics are marked ⚠ and must be replaced with parts having specifications equal to those originally installed.

* Schematic diagram is subject to change without notice.

■ SCHEMATIC DIAGRAM (MONO 7/10)

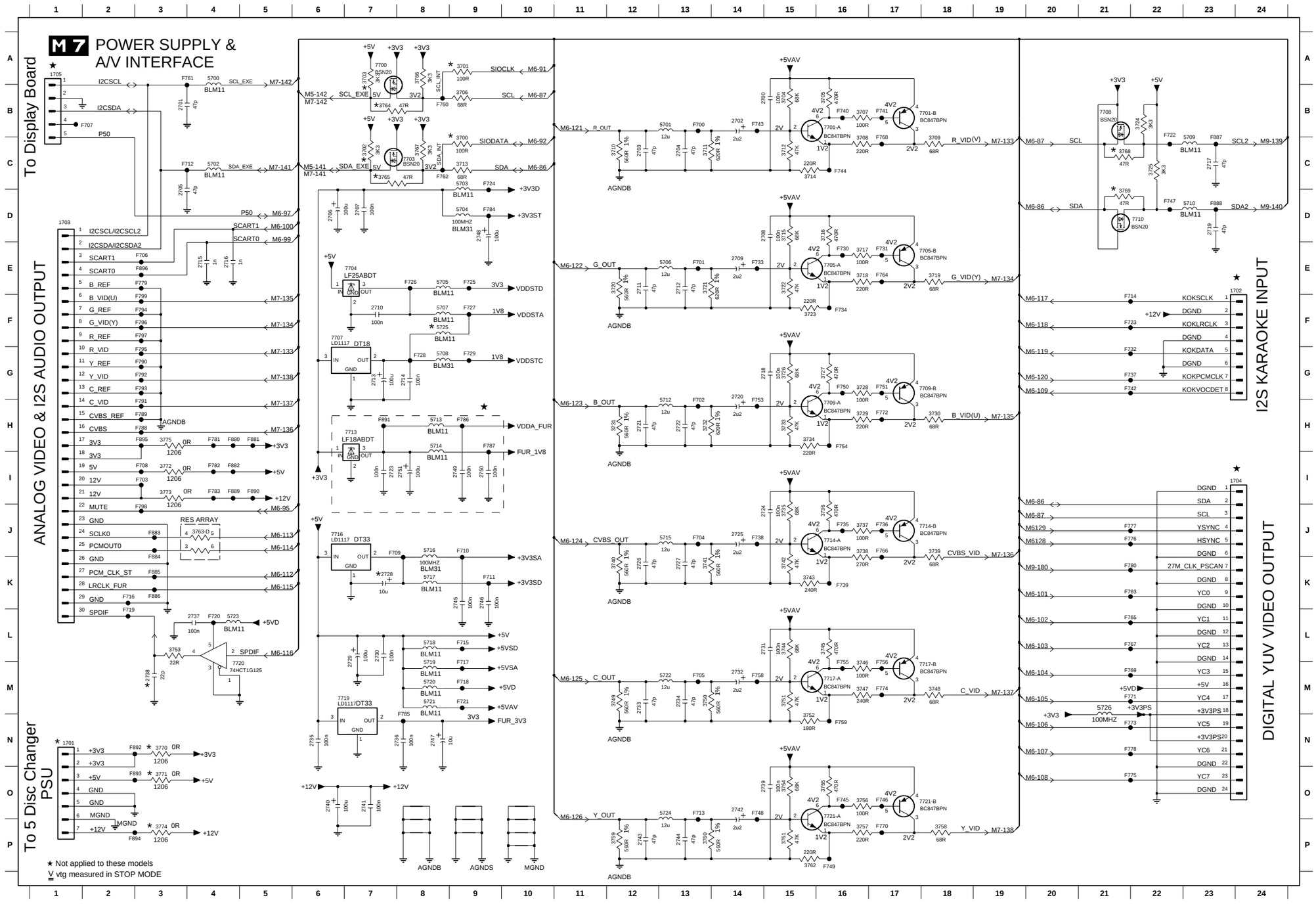

★ Not applied to these models
V vtg measured in STOP MODE

1701 N1	3755 O16	F743 B14
1702 E23	3756 O16	F744 C16
1703 D1	3757 P16	F745 O16
1704 I23	3758 P18	F746 O17
1705 A1	3759 P12	F747 D22
2700 B15	3760 P13	F748 O14
2701 B3	3761 P15	F749 P16
2702 B14	3762 P15	F750 G16
2703 C12	3763-D J4	F751 G17
2704 C13	3764 B7	F753 H14
2705 D3	3765 C7	F754 H16
2706 D6	3766 A8	F755 M16
2707 D7	3767 C8	F756 M17
2708 D15	3768 C21	F758 M14
2709 E14	3769 D21	F759 N16
2710 F7	3770 N3	F760 B8
2711 E12	3771 O3	F761 A4
2712 E13	3772 I3	F762 C8
2713 G7	3773 I3	F763 K21
2714 G8	3774 P3	F764 E17
2715 E4	3775 H3	F765 L21
2716 E4	5700 A4	F766 J17
2717 C23	5701 B13	F767 L21
2718 G15	5702 C4	F768 C17
2719 D23	5703 C9	F769 M21
2720 G14	5704 D9	F770 P17
2721 H12	5705 E8	F771 M21
2722 H13	5706 E13	F772 H17
2723 I7	5707 F8	F773 N21
2724 J15	5708 G8	F774 M17
2725 J14	5709 C23	F775 O21
2726 K12	5710 D23	F776 J21
2727 K13	5712 H13	F777 J21
2728 K7	5713 H8	F778 N21
2729 L7	5714 H8	F779 E3
2730 L7	5715 J13	F780 K21
2731 L15	5716 J8	F781 H4
2732 M14	5717 K8	F782 I4
2733 M12	5718 L8	F783 I4
2734 M13	5719 M8	F784 D9
2735 N6	5720 M8	F785 N8
2736 N8	5721 M8	F786 H9
2737 L4	5722 M13	F787 H9
2738 M3	5723 L4	F788 H3
2739 O15	5724 O13	F789 H3
2740 O6	5725 F8	F790 G3
2741 O7	5726 M21	F791 H3
2742 O14	7700 A7	F792 G3
2743 P12	7701-A B16	F793 G3
2744 P13	7701-B B17	F794 F3
2745 K9	7703 C8	F795 G3
2746 K9	7704 E7	F796 F3
2747 N8	7705-A E16	F797 F3
2748 D9	7705-B E17	F798 J3
2749 I9	7707 F6	F799 F3
2750 I9	7708 B21	F880 H4
2751 I8	7709-A H16	F881 H5
3700 C9	7709-B G17	F882 I4
3701 A9	7710 D22	F883 J3
3702 C7	7713 H7	F884 K3
3703 A7	7714-A J16	F885 K3
3704 B15	7714-B J17	F886 K3
3705 B16	7716 J6	F887 C23
3706 B9	7717-A M16	F888 D23
3707 B16	7717-B M17	F889 I4
3708 C16	7719 M6	F890 I5
3709 C18	7720 M5	F891 H7
3710 C12	7721-A O16	F892 N3
3711 C13	7721-B O17	F893 O3
3712 C15	F700 B13	F894 P2
3713 C9	F701 E13	F895 H3
3714 C15	F702 H13	F896 E3
3715 D15	F703 I3	
3716 D16	F704 J13	
3717 E16	F705 M13	
3718 E16	F706 E3	
3719 E18	F707 B2	
3720 E12	F708 I3	
3721 E13	F709 J7	
3722 E15	F710 J9	
3723 F15	F711 K9	
3724 B22	F712 C4	
3725 C22	F713 O13	
3726 G15	F714 F21	
3727 G16	F715 L9	
3728 G16	F716 K2	
3729 H16	F717 M9	
3730 H18	F718 M9	
3731 H12	F719 L2	
3732 H13	F720 L4	
3733 H15	F721 M9	
3734 H15	F722 B22	
3735 J15	F723 F21	
3736 J16	F724 C9	
3737 J16	F725 E9	
3738 J16	F726 E8	
3739 J18	F727 F9	
3740 K12	F728 G8	
3741 K13	F729 G9	
3742 K15	F730 E16	
3743 K15	F731 E17	
3744 L15	F732 G21	
3745 L16	F733 E14	
3746 M16	F734 F16	
3747 M16	F735 J16	
3748 M18	F736 J17	
3749 M12	F737 G21	
3750 M13	F738 J14	
3751 M15	F739 K16	
3752 N15	F740 B16	
3753 L3	F741 B17	
3754 O15	F742 G21	

* Components having special characteristics are marked ⚠ and must be replaced with parts having specifications equal to those originally installed.
* Schematic diagram is subject to change without notice.

■ SCHEMATIC DIAGRAM (MONO 8/10)

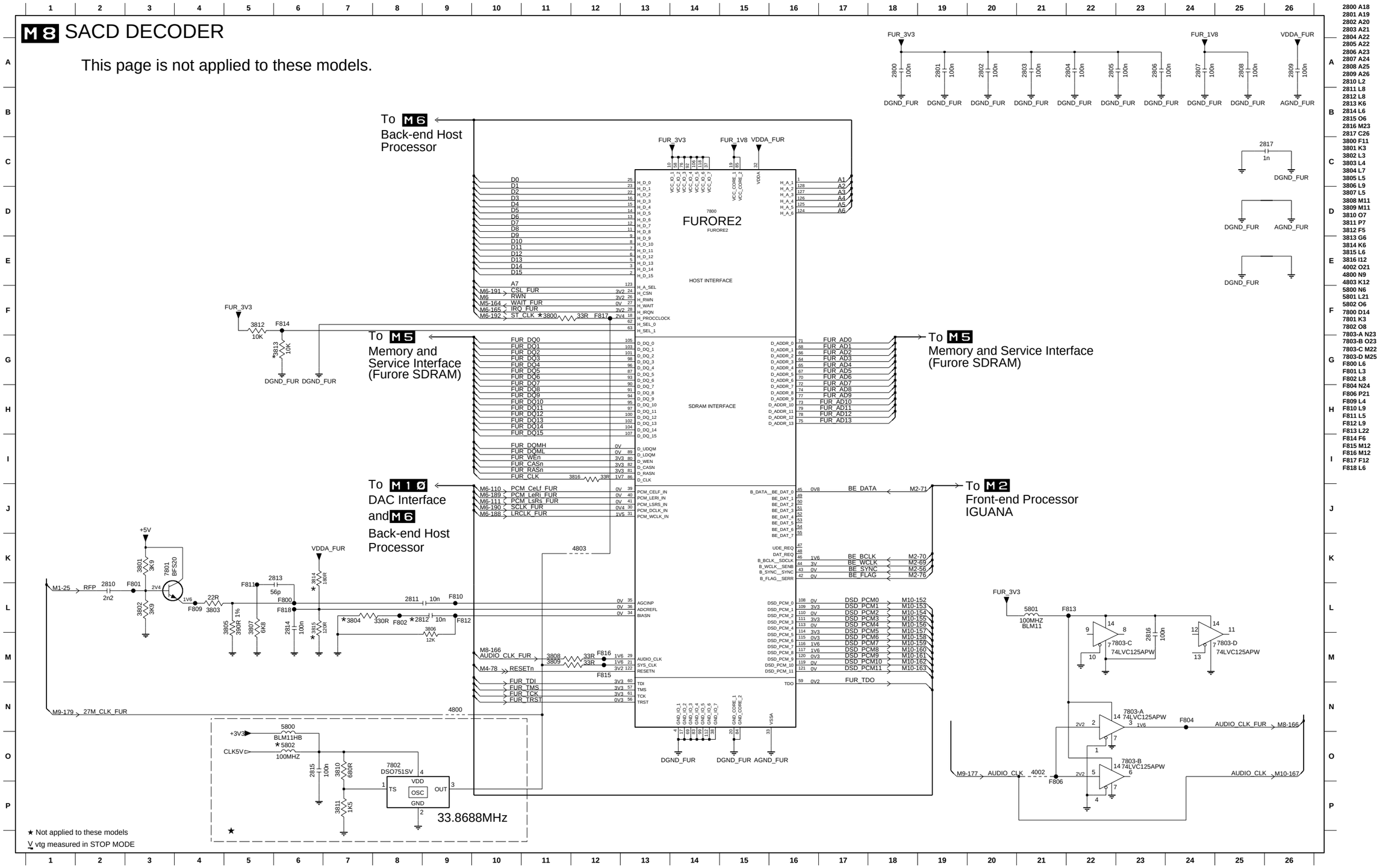

■ SCHEMATIC DIAGRAM (MONO 9/10)

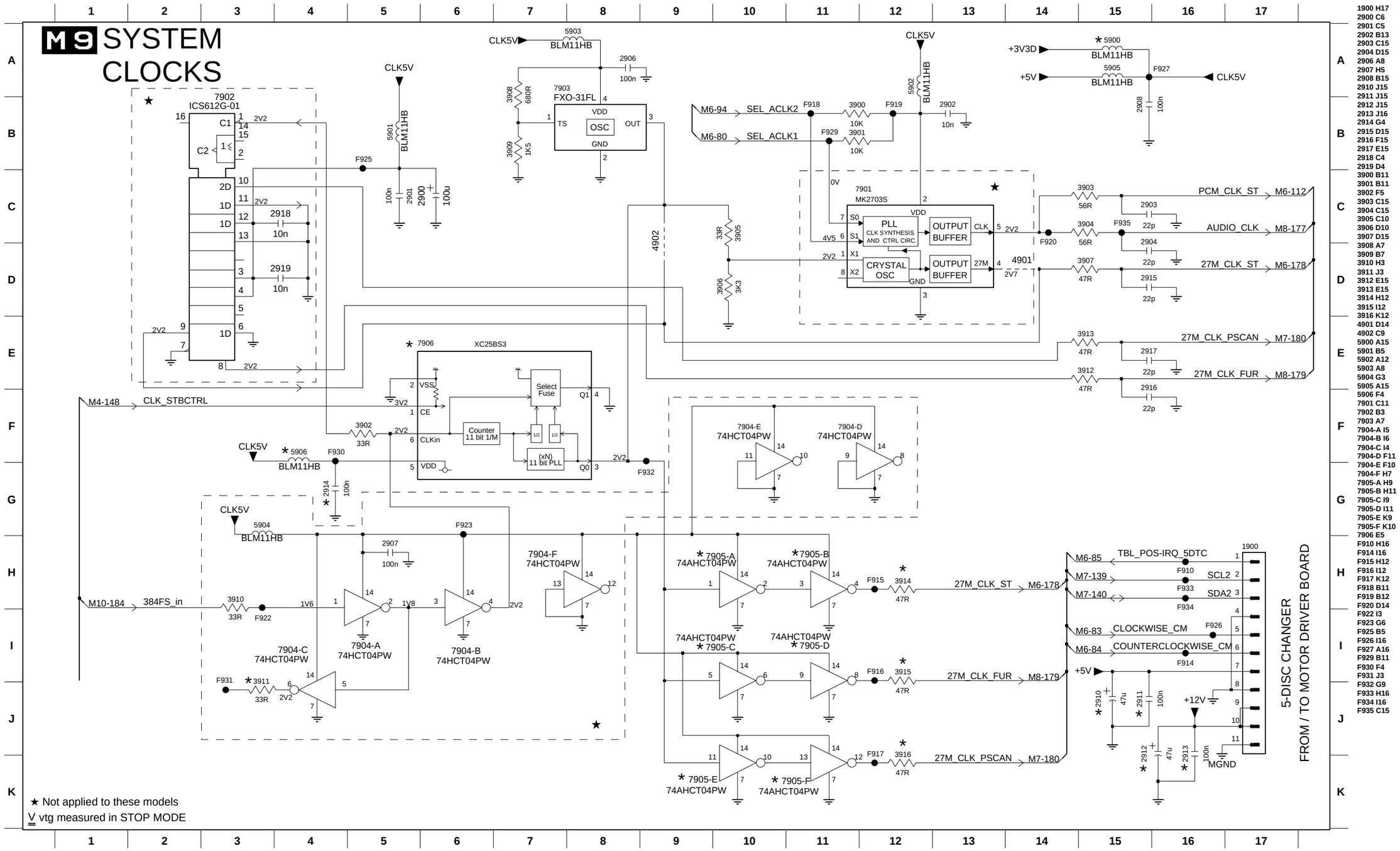

* Components having special characteristics are marked ⚠ and must be replaced with parts having specifications equal to those originally installed.

* Schematic diagram is subject to change without notice.

■ SCHEMATIC DIAGRAM (MONO 10/10)

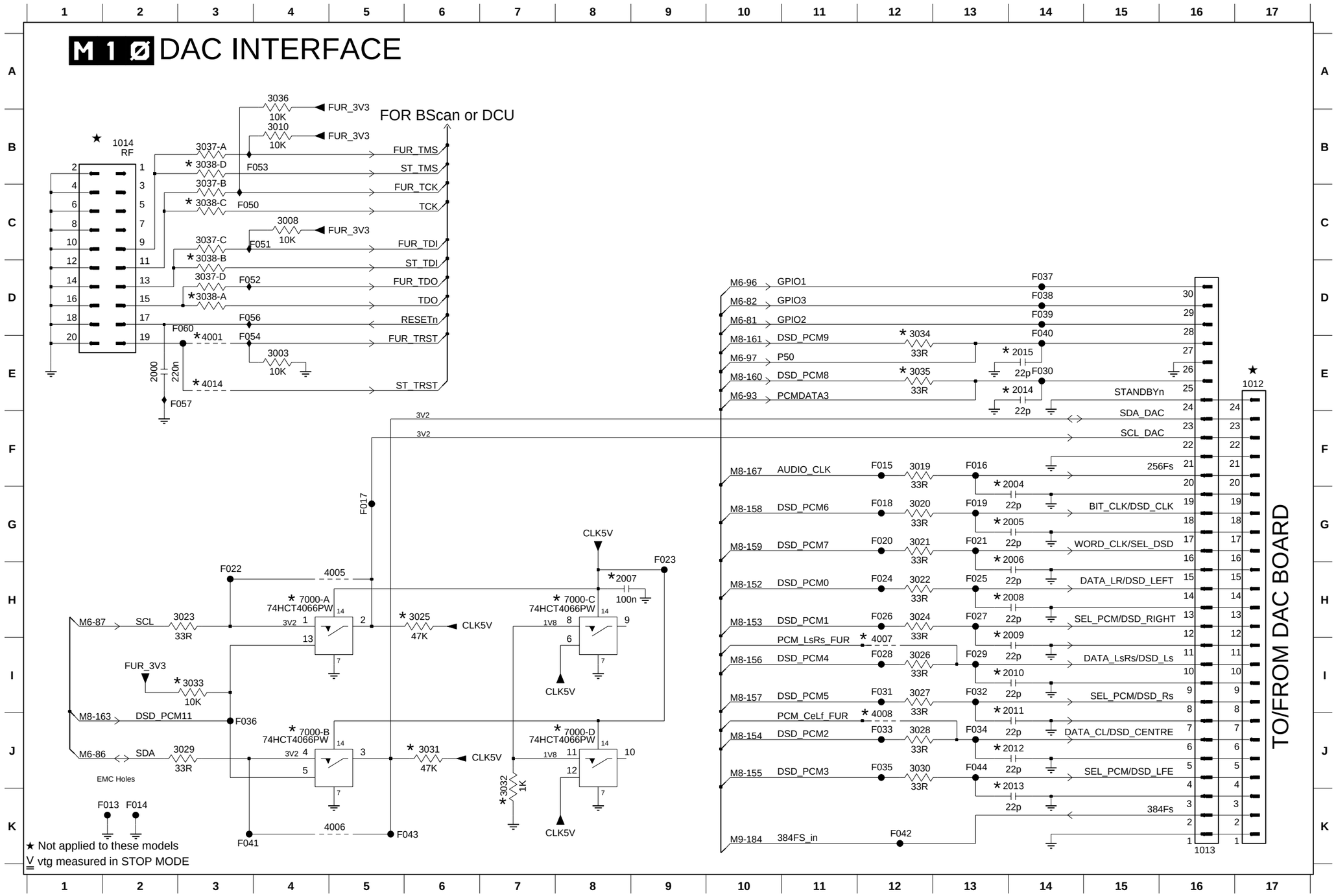

1012 E17
1013 K16
1014 B2
2000 E2
2004 G14
2005 G14
2006 H14
2007 H8
2008 H14
2009 I14
2010 I14
2011 J14
2012 J14
2013 K14
2014 E14
2015 E14
3003 E4
3008 C4
3010 B4
3019 F12
3020 G12
3021 G12
3022 H12
3023 H3
3024 H12
3025 H6
3026 I12
3027 I12
3028 J12
3029 J3
3030 J12
3031 J6
3032 J7
3033 I3
3034 E12
3035 E12
3036 A4
3037-A B3
3037-B C3
3037-C C3
3037-D D3
3038-A D3
3038-B D3
3038-C C3
3038-D B3
4001 E3
4005 H5
4006 K5
4007 I12
4008 J12
4014 E3
7000-A H4
7000-B J4
7000-C H8
7000-D J8
F013 K2
F014 K2
F015 F12
F016 F13
F017 G5
F018 G12
F019 G13
F020 G12
F021 G13
F022 H3
F023 H9
F024 H12
F025 H13
F026 H12
F027 H13
F028 I12
F029 I13
F030 E14
F031 I12
F032 I13
F033 J12
F034 J13
F035 J12
F036 J3
F037 D14
F038 D14
F039 D14
F040 E14
F041 K3
F042 K12
F043 K6
F044 J13
F050 C3
F051 C4
F052 D3
F053 B4
F054 E3
F056 D3
F057 E3
F060 D3

* Components having special characteristics are marked ⚠ and must be replaced with parts having specifications equal to those originally installed.
* Schematic diagram is subject to change without notice.

■ SCHEMATIC DIAGRAM (AV 1/3)

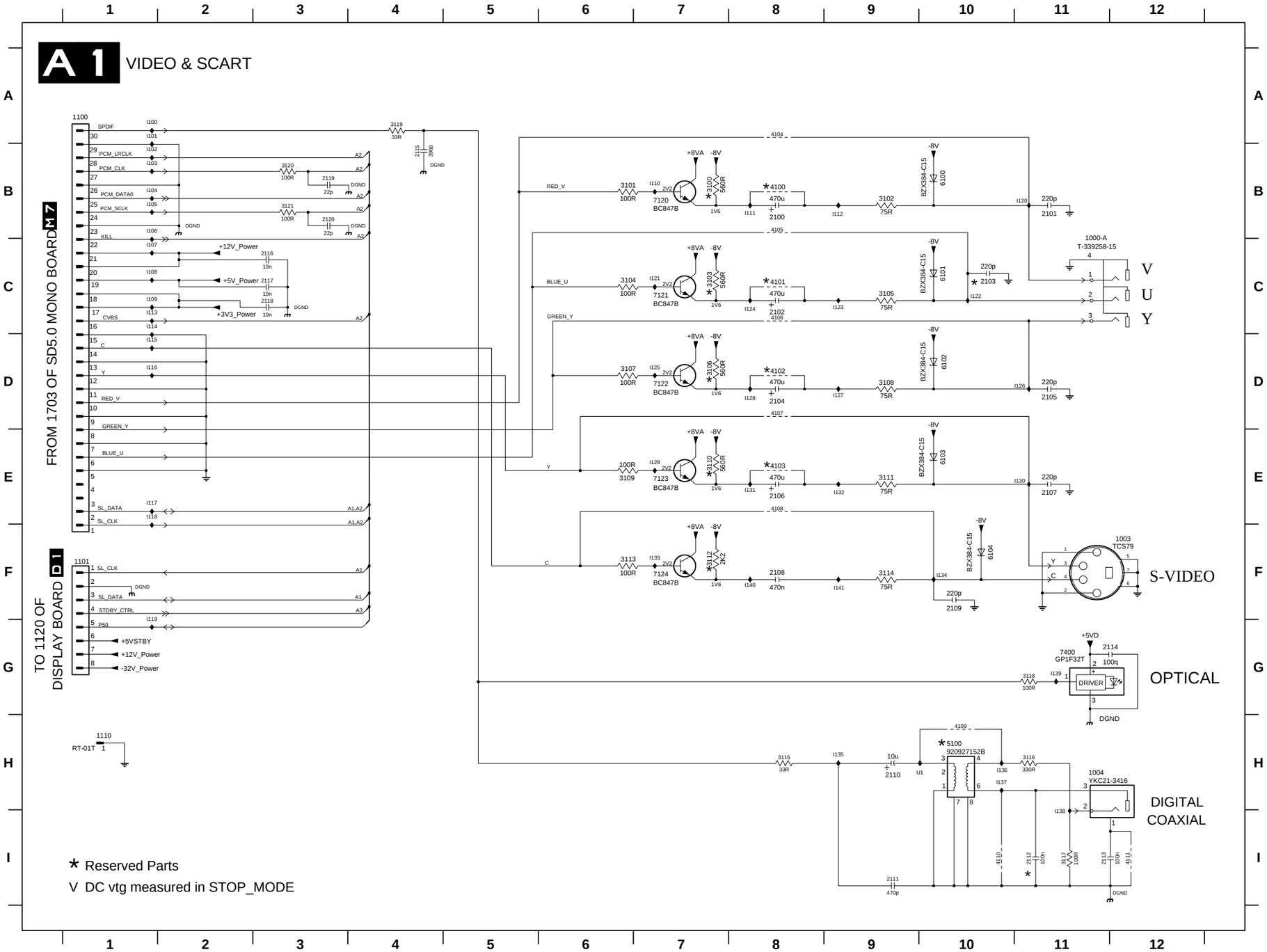

U1 H10
1000-A C11
1003 F12
1004 H11
1100 A1
1101 F1
1110 H1
2100 B8
2101 B11
2102 C8
2103 C10
2104 D8
2105 D11
2106 E8
2107 E11
2108 F8
2109 F10
2110 H9
2111 I9
2112 I11
2113 I11
2114 G12
2115 B4
2116 C3
2117 C3
2118 C3
2119 B3
2120 B3
3100 B7
3101 B6
3102 B9
3103 C7
3104 C6
3105 C9
3106 D7
3107 D6
3108 D9
3109 E6
3110 E7
3111 E9
3112 F7
3113 F6
3114 F9
3115 H8
3116 H11
3117 I11
3118 G11
3119 A4
3120 B3
3121 B3
4100 B8
4101 C8
4102 D8
4103 E8
4104 A8
4105 B8
4106 C8
4107 D8
4108 E8
4109 H10
4110 I10
4111 I12
5100 H10
6100 B10
6101 C10
6102 D10
6103 E10
6104 F10
7120 B7
7121 C7
7122 D7
7123 E7
7124 F7
7400 G11
I100 A1
I101 A1
I102 B1
I103 B1
I104 B1
I105 B1
I106 B1
I107 C1
I108 C1
I109 C1
I110 B7
I111 B8
I112 B9
I113 C1
I114 C1
I115 D1
I116 D1
I117 E1
I118 E1
I119 F1
I120 B11
I121 C7
I122 C10
I123 C9
I124 C8
I125 D7
I126 D11
I127 D9
I128 D8
I129 E7
I130 E11
I131 E8
I132 E9
I133 F7
I134 F10
I135 H9
I136 H10
I137 H10
I138 I11
I139 G11
I140 F8
I141 F9

* Components having special characteristics are marked ⚠ and must be replaced with parts having specifications equal to those originally installed.
* Schematic diagram is subject to change without notice.

■ SCHEMATIC DIAGRAM (AV 2/3)

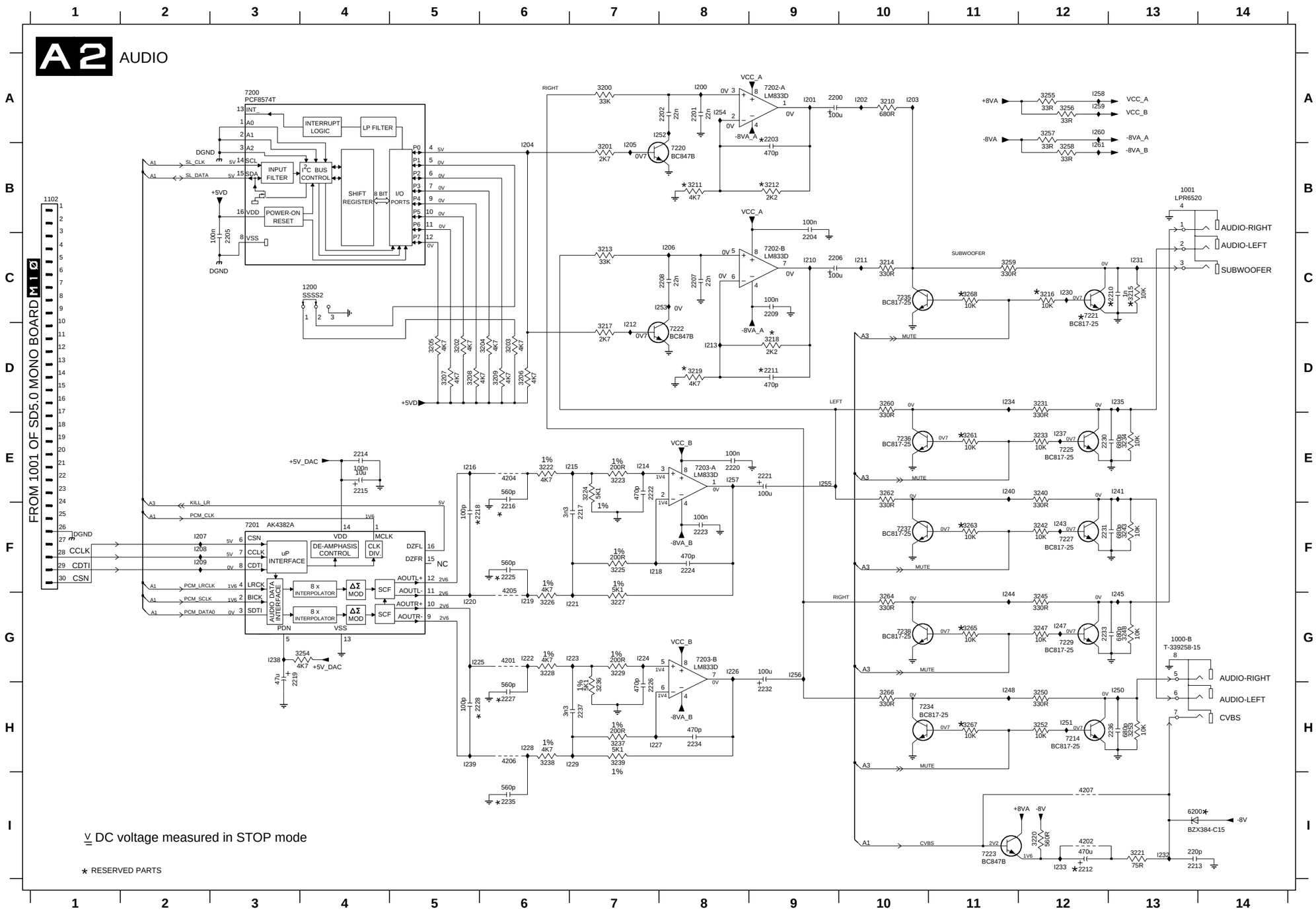

1000-B G13
1001 B13
1102 B1
1200 C4
2200 A9
2201 A8
2202 A8
2203 A9
2204 C9
2205 C3
2206 C9
2207 C8
2208 C8
2209 C9
2210 C13
2211 D9
2212 I2
2213 I3
2214 E4
2215 E4
2216 F6
2217 F7
2218 F5
2219 G3
2220 E8
2221 E9
2222 E7
2223 F8
2224 F8
2225 F6
2226 H7
2227 H6
2228 H5
2230 E12
2231 F12
2232 H9
2233 G12
2234 H8
2235 I6
2236 H13
2237 H7
3200 A7
3201 B7
3202 D5
3203 D6
3204 D6
3205 D5
3206 D6
3207 D5
3208 D5
3209 D6
3210 A10
3211 B8
3212 B9
3213 C7
3214 C10
3215 C13
3216 C12
3217 D7
3218 D9
3219 D8
3220 I2
3221 I3
3222 E6
3223 E7
3224 E7
3225 F7
3226 G6
3227 G7
3228 G6
3229 G7
3231 D12
3233 E12
3234 E13
3236 H7
3237 H7
3238 H6
3239 H7
3240 E12
3242 F12
3243 F13
3245 G12
3247 G12
3248 G13
3250 H12
3252 H12
3253 H13
3254 G4
3255 A12
3256 A12
3257 A12
3258 B12
3259 C11
3260 D10
3261 E11
3262 E10
3263 F11
3264 G10
3265 G11
3266 H10
3267 H11
3268 C11
4201 G6
4202 I2
4204 E6
4205 F6
4206 H6
4207 I2
6200 I3
7200 A3
7201 F3
7202-A A9
7202-B C9
7203-A E8
7203-B G8
7214 H12
7220 B8
7221 C12
7222 D8
7223 I11
7225 E12
7227 F12
7229 G12
7234 H10
7235 C10
7236 E10
7237 F10
7238 G10
I200 A8
I201 A9
I202 A10
I203 A10
I204 B6
I205 B7
I206 C8
I207 F2
I208 F2
I209 F2
I210 C9
I211 C10
I212 D7
I213 D8
I214 E7
I215 E7
I216 E5
I218 F7
I219 G6
I220 G5
I221 G7
I222 G6
I223 G7
I224 G7
I225 G5
I226 G8
I227 H7
I228 H6
I229 H7
I230 C12
I231 C13
I232 I13
I233 I12
I234 D11
I235 D13
I237 E12
I238 G3
I239 H5
I240 E11
I241 E13
I243 F12
I244 G11
I245 G13
I247 G12
I248 H11
I250 H13
I251 H12
I252 A8
I253 C8
I254 A8
I255 E9
I256 G9
I257 E8
I258 A12
I259 A12
I260 A12
I261 B12

* Components having special characteristics are marked ⚠ and must be replaced with parts having specifications equal to those originally installed.

* Schematic diagram is subject to change without notice.

■ SCHEMATIC DIAGRAM (AV 3/3)

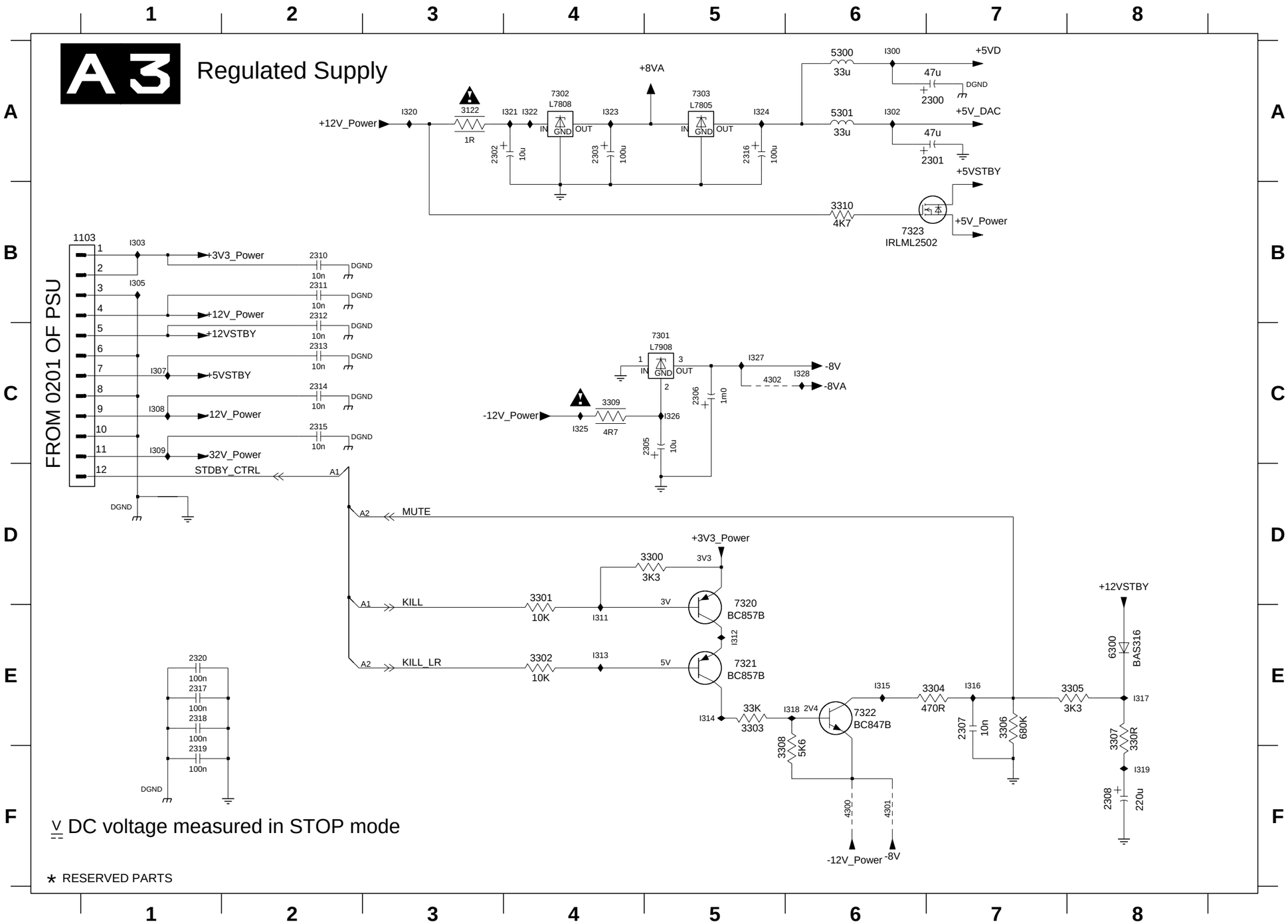

1103 B1
2300 A7
2301 A7
2302 A3
2303 A4
2305 C5
2306 C5
2307 E7
2308 F8
2310 B2
2311 B2
2312 B2
2313 C2
2314 C2
2315 C2
2316 A5
2317 E1
2318 E1
2319 F1
2320 E1
3122 A3
3300 D5
3301 D4
3302 E4
3303 E5
3304 E7
3305 E8
3306 E7
3307 E8
3308 F5
3309 C4
3310 B6
4300 F6
4301 F6
4302 C5
5300 A6
5301 A6
6300 E8
7301 C5
7302 A4
7303 A5
7320 D5
7321 E5
7322 E6
7323 B6
I300 A6
I302 A6
I303 B1
I305 B1
I307 C1
I308 C1
I309 C1
I311 E4
I312 E5
I313 E4
I314 E5
I315 E6
I316 E7
I317 E8
I318 E6
I319 F8
I320 A3
I321 A4
I322 A4
I323 A4
I324 A5
I325 C4
I326 C5
I327 C5
I328 C6

* Components having special characteristics are marked ⚠ and must be replaced with parts having specifications equal to those originally installed.
* Schematic diagram is subject to change without notice.

■ SCHEMATIC DIAGRAM (FRONT [1] 1/2)

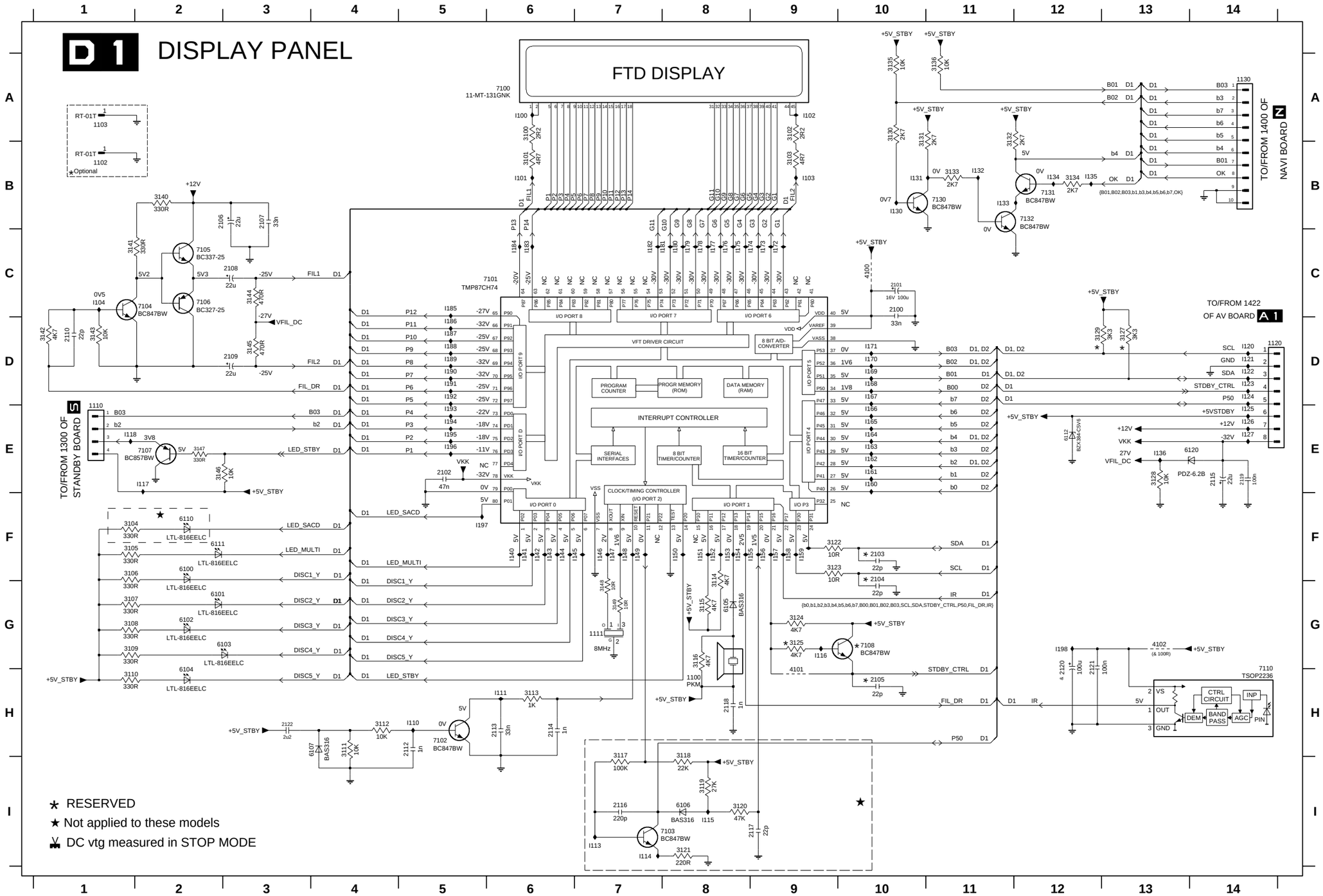

1100 H8	I120 D14
1102 B1	I121 D14
1103 A1	I122 D14
1110 E1	I123 D14
1111 G7	I124 D14
1120 D14	I125 E14
1130 A14	I126 E14
2100 C10	I127 E14
2101 C10	I130 B10
2102 E5	I131 B10
2103 F10	I132 B11
2104 G10	I133 B11
2105 H10	I134 B12
2106 B3	I135 B12
2107 B3	I136 E13
2108 C3	I140 F6
2109 D3	I141 F6
2110 D1	I142 F6
2112 H5	I143 F6
2113 H6	I144 F6
2114 H6	I145 F7
2115 E14	I146 F7
2116 I7	I147 F7
2117 I9	I148 F7
2118 H8	I149 F7
2119 E14	I150 F8
2120 G12	I151 F8
2121 G12	I152 F8
2122 H3	I153 F8
3100 A6	I154 F8
3101 B6	I155 F9
3102 A9	I156 F9
3103 B9	I157 F9
3104 F1	I158 F9
3105 F1	I159 F9
3106 F1	I160 E10
3107 G1	I161 E10
3108 G1	I162 E10
3109 G1	I163 E10
3110 H1	I164 E10
3111 H4	I165 E10
3112 H4	I166 E10
3113 H6	I167 D10
3114 F8	I168 D10
3115 G8	I169 D10
3116 G8	I170 D10
3117 I7	I171 D10
3118 I8	I172 C9
3119 I8	I173 C9
3120 I8	I174 C9
3121 I8	I175 C8
3122 F9	I176 C8
3123 F9	I177 C8
3124 G9	I178 C8
3125 G9	I179 C8
3127 D13	I180 C8
3128 E13	I181 C8
3129 D12	I182 C7
3130 A10	I183 C6
3131 A10	I184 C6
3132 A11	I185 C5
3133 B11	I186 D5
3134 B12	I187 D5
3135 A10	I188 D5
3136 A11	I189 D5
3140 B2	I190 D5
3141 C1	I191 D5
3142 D1	I192 D5
3143 D1	I193 E5
3144 C3	I194 E5
3145 D3	I195 E5
3146 E2	I196 E5
3147 E2	I197 F5
3148 G7	I198 G12
3149 G7	
4100 C10	
4101 H9	
4102 G13	
6100 F2	
6101 G2	
6102 G2	
6103 G3	
6104 H2	
6105 G8	
6106 I8	
6107 H4	
6110 F2	
6111 F2	
6112 E12	
6120 E14	
7100 A6	
7101 C6	
7102 H5	
7103 I7	
7104 C2	
7105 C2	
7106 C2	
7107 E2	
7108 G10	
7110 H14	
7130 B11	
7131 B12	
7132 B12	
I100 A6	
I101 B6	
I102 A9	
I103 B9	
I104 C1	
I110 H5	
I111 H6	
I113 I7	
I114 I7	
I115 I8	
I116 G9	
I117 E2	
I118 E1	

★ RESERVED

★ Not applied to these models

⚠ DC vtg measured in STOP MODE

* Components having special characteristics are marked ⚠ and must be replaced with parts having specifications equal to those originally installed.

* Schematic diagram is subject to change without notice.

■ SCHEMATIC DIAGRAM (FRONT [1] 2/2)

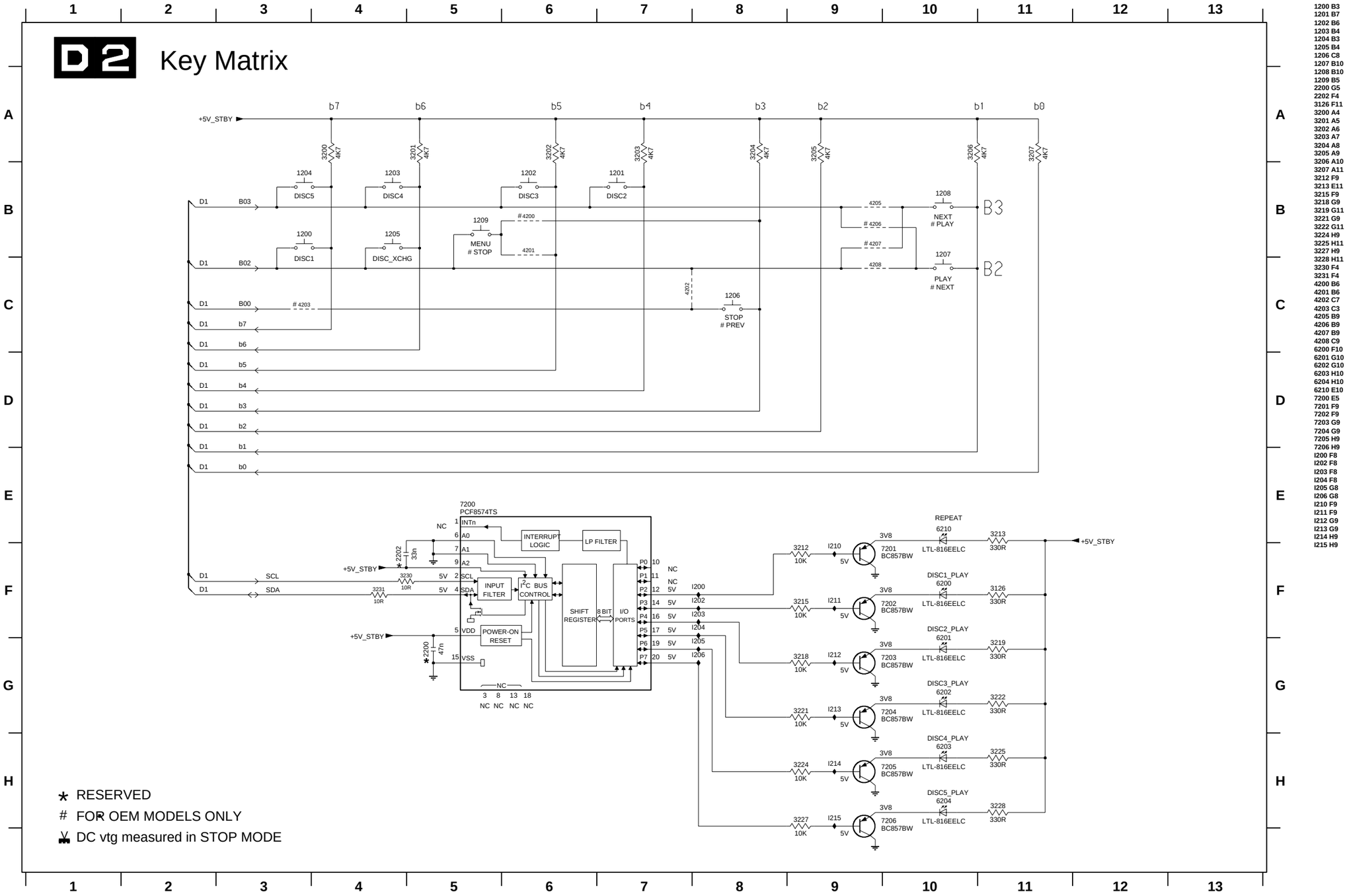

1200 B3
1201 B7
1202 B6
1203 B4
1204 B3
1205 B4
1206 C8
1207 B10
1208 B10
1209 B5
2200 G5
2202 F4
3126 F11
3200 A4
3201 A5
3202 A6
3203 A7
3204 A8
3205 A9
3206 A10
3207 A11
3212 F9
3213 E11
3215 F9
3218 G9
3219 G11
3221 G9
3222 G11
3224 H9
3225 H11
3227 H9
3228 H11
3230 F4
3231 F4
4200 B6
4201 B6
4202 C7
4203 C3
4205 B9
4206 B9
4207 B9
4208 C9
6200 F10
6201 G10
6202 G10
6203 H10
6204 H10
6210 E10
7200 E5
7201 F9
7202 F9
7203 G9
7204 G9
7205 H9
7206 H9
I200 F8
I202 F8
I203 F8
I204 F8
I205 G8
I206 G8
I210 F9
I211 F9
I212 G9
I213 G9
I214 H9
I215 H9

* Components having special characteristics are marked ⚠ and must be replaced with parts having specifications equal to those originally installed.
* Schematic diagram is subject to change without notice.

■ SCHEMATIC DIAGRAM (FRONT [2] & [3])

1400 A1 1420 B3 I401 B1 I403 B1 I406 B1 I408 B1
1410 A3 I400 A1 I402 B1 I405 B1 I407 B1 I409 C1

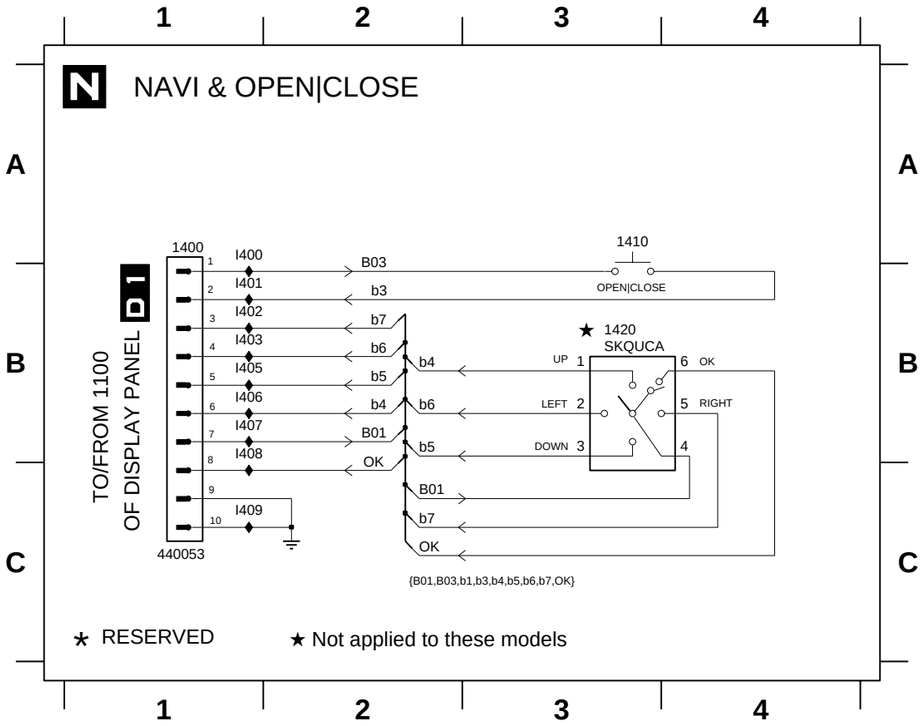

1300 B1 1310 B3 3300 B2 4300 C4 6300 B3

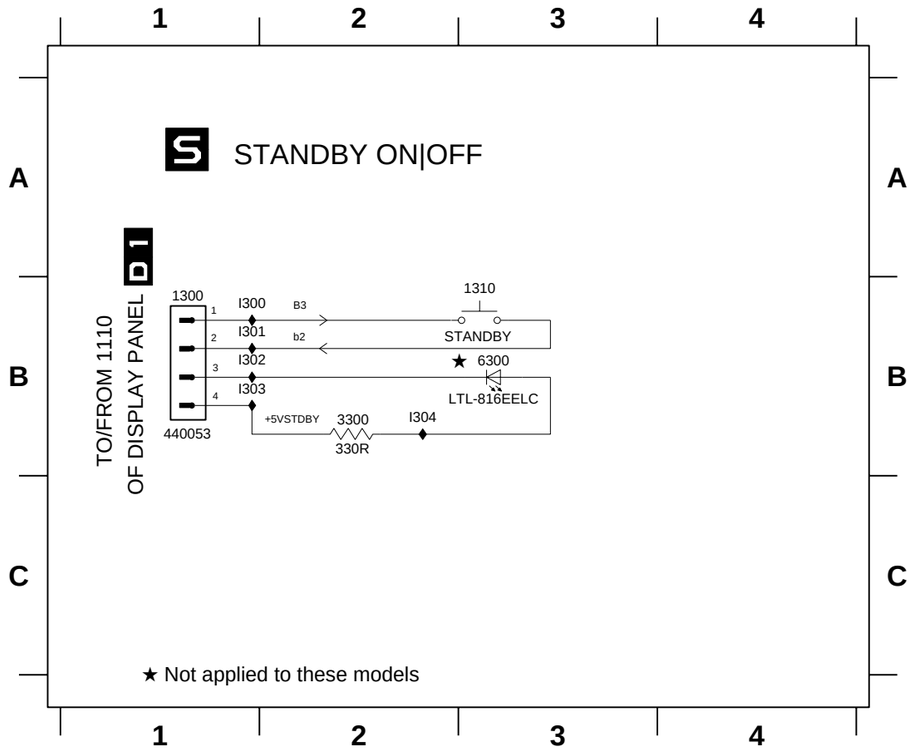

* Components having special characteristics are marked ⚠ and must be replaced with parts having specifications equal to those originally installed.
* Schematic diagram is subject to change without notice.

■ SCHEMATIC DIAGRAM (MOTOR DRIVER)

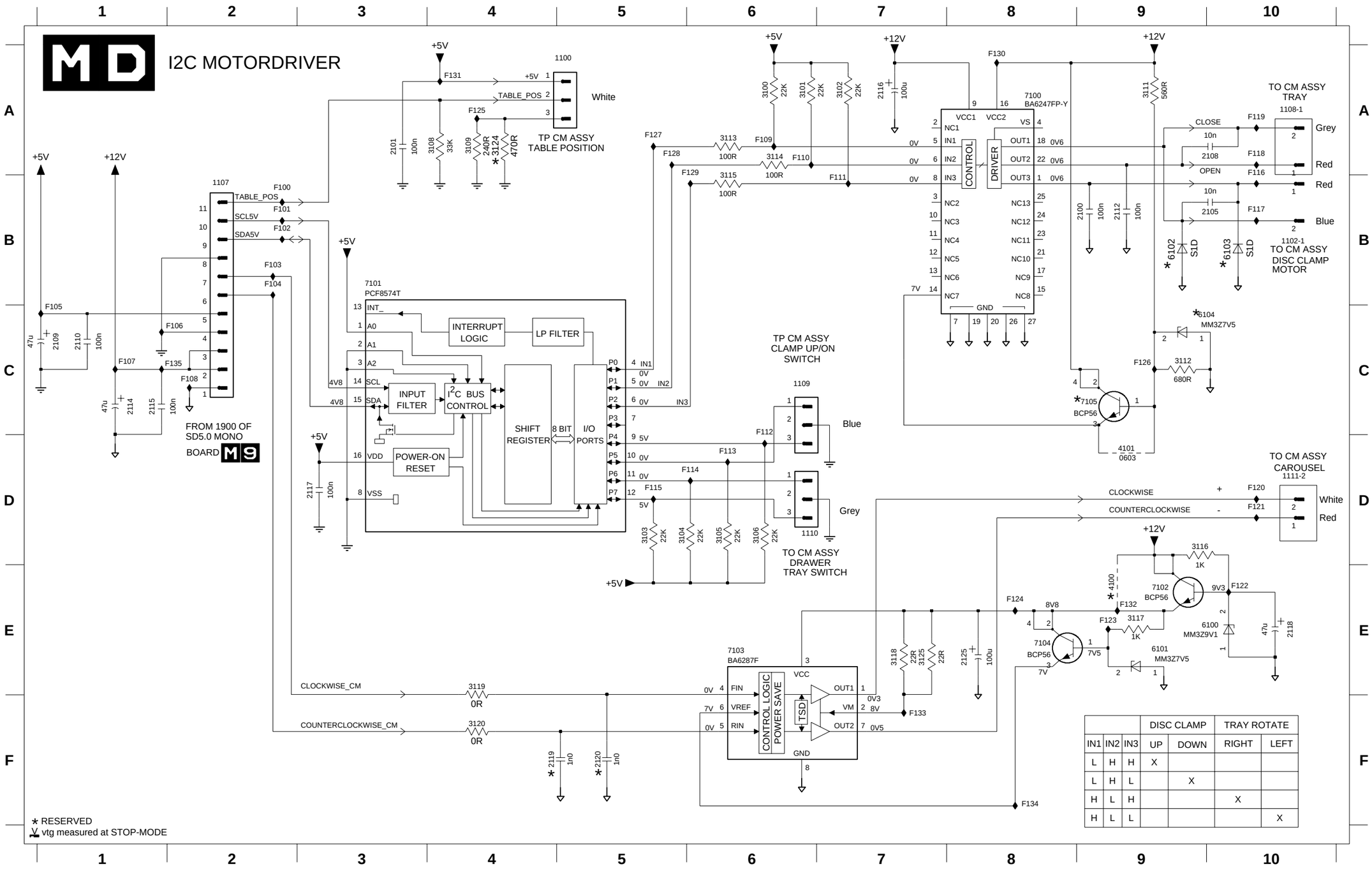

			DISC CLAMP		TRAY ROTATE	
IN1	IN2	IN3	UP	DOWN	RIGHT	LEFT
L	H	H	X			
L	H	L		X		
H	L	H			X	
H	L	L				X

1100 A4
1102-1 B10
1107 B2
1108-1 A10
1109 C6
1110 D6
1111-2 D10
2100 B9
2101 A3
2105 B10
2108 A10
2109 C1
2110 C1
2112 B9
2114 C1
2115 C1
2116 A7
2117 D3
2118 E10
2119 F4
2120 F5
2125 E8
3100 A6
3101 A6
3102 A7
3103 D5
3104 D5
3105 D6
3106 D6
3108 A4
3109 A4
3111 A9
3112 C9
3113 A6
3114 A6
3115 B6
3116 D9
3117 E9
3118 E7
3119 E4
3120 F4
3124 A4
3125 E7
4100 E9
4101 D9
6100 E10
6101 E9
6102 B9
6103 B10
6104 C9
7100 A8
7101 B3
7102 E9
7103 E6
7104 E8
7105 C9
F100 B2
F101 B2
F102 B2
F103 B2
F104 B2
F105 C1
F106 C2
F107 C1
F108 C2
F109 A6
F110 A6
F111 B7
F112 C6
F113 D6
F114 D6
F115 D5
F116 A10
F117 B10
F118 A10
F119 A10
F120 D10
F121 D10
F122 E10
F123 E9
F124 E8
F125 A4
F126 C9
F127 A5
F128 A5
F129 A6
F130 A8
F131 A4
F132 E9
F133 F7
F134 F8
F135 C2

* Components having special characteristics are marked ⚠ and must be replaced with parts having specifications equal to those originally installed.

* Schematic diagram is subject to change without notice.

■ SCHEMATIC DIAGRAM (CM-PH1)

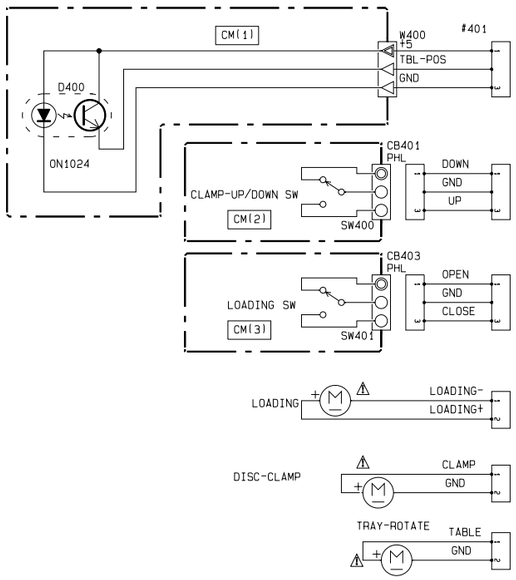

CAPACITOR

REMARKS	PARTS NAME	
NO MARK	ELECTROLYTIC CAPACITOR	⇶
⊗	TANTALUM CAPACITOR	
NO MARK	CERAMIC CAPACITOR	⫼
◉	CERAMIC TUBULAR CAPACITOR	
◎	POLYESTER FILM CAPACITOR	
○	POLYSTYRENE FILM CAPACITOR	
Ⓘ	MICA CAPACITOR	
Ⓟ	POLYPROPYLENE FILM CAPACITOR	
⊛	SEMICONDUCTIVE CERAMIC CAPACITOR	

RESISTOR

REMARKS	PARTS NAME
NO MARK	CARBON FILM RESISTOR (P=5)
◪	CARBON FILM RESISTOR (P=10)
△	METAL OXIDE FILM RESISTOR
◬	METAL FILM RESISTOR
⊠	METAL PLATE RESISTOR
◪	FIRE PROOF CARBON FILM RESISTOR
□	CEMENT MOLDED RESISTOR
⊘	SEMI VARIABLE RESISTOR
▤	CHIP RESISTOR

NOTICE (model)
(J)····· JAPANESE
(U)····· U.S.A
(C)····· CANADIAN
(R)····· GENERAL
(A)····· AUSTRALIAN
(B)····· BRITISH
(G)····· EUROPEAN
(T)····· CHINA
(L)····· SINGAPORE

* Components having special characteristics are marked ⚠ and must be replaced with parts having specifications equal to those originally installed.
* Schematic diagram is subject to change without notice.

PARTS LIST

■ ELECTRICAL PARTS

■ WARNING
Components having special characteristics are marked ⚠ and must be replaced with parts having specifications equal to those originally installed.

ABBREVIATIONS IN THIS LIST ARE AS FOLLOWS :

C.A.EL.CHP	:	CHIP ALUMI. ELECTROLYTIC CAP
C.CE	:	CERAMIC CAP
C.CE.ARRAY	:	CERAMIC CAP ARRAY
C.CE.CHP	:	CHIP CERAMIC CAP
C.CE.ML	:	MULTILAYER CERAMIC CAP
C.CE.M.CHP	:	CHIP MULTILAYER CERAMIC CAP
C.CE.SAFTY	:	RECOGNIZED CERAMIC CAP
C.CE.TUBLR	:	CERAMIC TUBULAR CAP
C.CE.SMI	:	SEMI CONDUCTIVE CERAMIC CAP
C.EL	:	ELECTROLYTIC CAP
C.MICA	:	MICA CAP
C.ML.FLM	:	MULTILAYER FILM CAP
C.MP	:	METALLIZED PAPER CAP
C.MYLAR	:	MYLAR FILM CAP
C.MYLAR.ML	:	MULTILAYER MYLAR FILM CAP
C.PAPER	:	PAPER CAPACITOR
C.PLS	:	POLYSTYRENE FILM CAP
C.POL	:	POLYESTER FILM CAP
C.POLY	:	POLYETHYLENE FILM CAP
C.PP	:	POLYPROPYLENE FILM CAP
C.TNTL	:	TANTALUM CAP
C.TNTL.CHP	:	CHIP TANTALUM CAP
C.TRIM	:	TRIMMER CAP
CN	:	CONNECTOR
CN.BS.PIN	:	CONNECTOR, BASE PIN
CN.CANNON	:	CONNECTOR, CANNON
CN.DIN	:	CONNECTOR, DIN
CN.FLAT	:	CONNECTOR, FLAT CABLE
CN.POST	:	CONNECTOR, BASE POST
COIL.MX.AM	:	COIL, AM MIX
COIL.AT.FM	:	COIL, FM ANTENNA
COIL.DT.FM	:	COIL, FM DETECT
COIL.MX.FM	:	COIL, FM MIX
COIL.OUTPT	:	OUTPUT COIL
DIOD.ARRAY	:	DIODE ARRAY
DIODE.BRG	:	DIODE BRIDGE
DIODE.CHP	:	CHIP DIODE
DIODE.SHOT	:	SCHOTTKY BARRIER DIODE
DIODE.VAR	:	VARACTOR DIODE
DIOD.Z.CHP	:	CHIP ZENER DIODE
DIODE.ZENR	:	ZENER DIODE
DSCR.CE	:	CERAMIC DISCRIMINATOR
FER.BEAD	:	FERRITE BEADS
FER.CORE	:	FERRITE CORE
FET.CHP	:	CHIP FET
FL.DSPLY	:	FLUORESCENT DISPLAY
FLTR.CE	:	CERAMIC FILTER
FLTR.COMB	:	COMB FILTER MODULE
FLTR.LC.RF	:	LC FILTER ,EMI
GND.MTL	:	GROUND PLATE
GND.TERM	:	GROUND TERMINAL
HOLDER.FUS	:	FUSE HOLDER
IC.PRTCT	:	IC PROTECTOR
JUMPER.CN	:	JUMPER CONNECTOR
JUMPER.TST	:	JUMPER, TEST POINT
L.DTCT	:	LIGHT DETECTING MODULE
L.EMIT	:	LIGHT EMITTING MODULE
LED.DSPLY	:	LED DISPLAY
LED.INFRD	:	LED, INFRARED
MODUL.RF	:	MODULATOR, RF
PHOT.CPL	:	PHOTO COUPLER
PHOT.INTR	:	PHOTO INTERRUPTER
PHOT.RFLCT	:	PHOTO REFLECTOR
PIN.TEST	:	PIN, TEST POINT
PLST.RIVET	:	PLASTIC RIVET
R.ARRAY	:	RESISTOR ARRAY
R.CAR	:	CARBON RESISTOR
R.CAR.CHP	:	CHIP RESISTOR
R.CAR.FP	:	FLAME PROOF CARBON RESISTOR
R.FUS	:	FUSABLE RESISTOR
R.MTL.CHP	:	CHIP METAL FILM RESISTOR
R.MTL.FLM	:	METAL FILM RESISTOR
R.MTL.OXD	:	METAL OXIDE FILM RESISTOR
R.MTL.PLAT	:	METAL PLATE RESISTOR
RSNR.CE	:	CERAMIC RESONATOR
RSNR.CRYS	:	CRYSTAL RESONATOR
R.TW.CEM	:	TWIN CEMENT FIXED RESISTOR
R.WW	:	WIRE WOUND RESISTOR
SCR.BND.HD	:	BIND HEAD B-TITE SCREW
SCR.BW.HD	:	BW HEAD TAPPING SCREW
SCR.CUP	:	CUP TITE SCREW
SCR.TERM	:	SCREW TERMINAL
SCR.TR	:	SCREW, TRANSISTOR
SUPRT.PCB	:	SUPPORT, P.C.B.
SURG.PRTCT	:	SURGE PROTECTOR
SW.TACT	:	TACT SWITCH
SW.LEAF	:	LEAF SWITCH
SW.LEVER	:	LEVER SWITCH
SW.MICRO	:	MICRO SWITCH
SW.PUSH	:	PUSH SWITCH
SW.RT.ENC	:	ROTARY ENCODER
SW.RT.MTR	:	ROTARY SWITCH WITH MOTOR
SW.RT	:	ROTARY SWITCH
SW.SLIDE	:	SLIDE SWITCH
TERM.SP	:	SPEAKER TERMINAL
TERM.WRAP	:	WRAPPING TERMINAL
THRMST.CHP	:	CHIP THERMISTOR
TR.CHP	:	CHIP TRANSISTOR
TR.DGT	:	DIGITAL TRANSISTOR
TR.DGT.CHP	:	CHIP DIGITAL TRANSISTOR
TRANS	:	TRANSFORMER
TRANS.PULS	:	PULSE TRANSFORMER
TRANS.PWR	:	POWER TRANSFORMER ASS'y
TUNER.AM	:	TUNER PACK, AM
TUNER.FM	:	TUNER PACK, FM
TUNER.PK	:	FRONT-END TUNER PACK
VR	:	ROTARY POTENTIOMETER
VR.MTR	:	POTENTIOMETER WITH MOTOR
VR.SW	:	POTENTIOMETER WITH ROTARY SW
VR.SLIDE	:	SLIDE POTENTIOMETER
VR.TRIM	:	TRIMMER POTENTIOMETER

Note) Those parts marked with “#” are not included in the P.C.B. ass'y.