STEREO GRAPHIC EQUALIZER

GE-60

SERVICE MANUAL

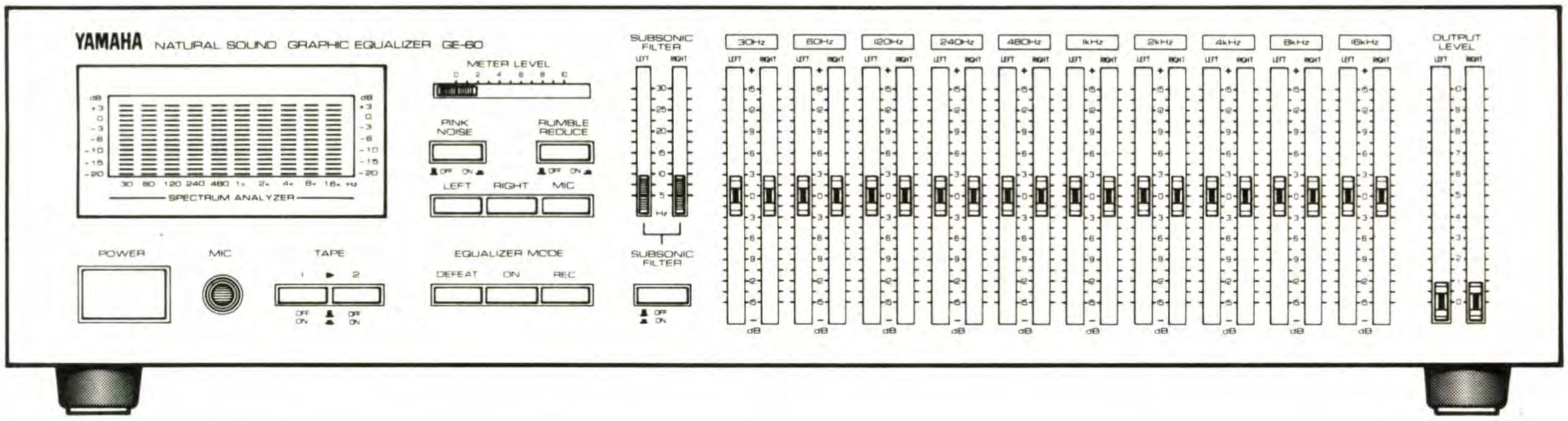

• MM-60

IMPORTANT NOTICE

This manual has been provided for the use of authorized Yamaha Retailers and their service personnel. It has been assumed that basic service procedures inherant to the industry, and more specifically Yamaha Products, are already known and understood by the users, and have therefore not been restated.

WARNING: Failure to follow appropriate service and safety procedures when servicing this product may result in personal injury, destruction of expensive components and failure of the product to perform as specified. For these reasons, we advise all Yamaha product owners that all service required should be performed by an authorized Yamaha Retailer or the appointed service representative.

IMPORTANT: The presentation or sale of this manual to any individual or firm does not constitute authorization, certification, recognition of any applicable technical capabilities, or establish a principle-agent relationship of any form.

The data provided is believed to be accurate and applicable to the unit(s) indicated on the cover. The research, engineering, and service departments of Yamaha are continually striving to improve Yamaha products. Modifications are, therefore, inevitable and changes in specification are subject to change without notice or obligation to retrofit. Should any discrepancy appear to exist, please contact the distributor's Service Division.

WARNING: Static discharges can destroy expensive components. Discharge any static electricity your body may have accumulated by grounding yourself to the ground buss in the unit (heavy gauge black wires connect to this buss).

IMPORTANT: Turn the unit OFF during disassembly and parts replacement. Recheck all work before you apply power to the unit.

CONTENTS

TO SERVICE PERSONNEL 1
SPECIFICATIONS 1
REAR PANELS 2
BLOCK DIAGRAM 3
INTERNAL VIEW 4
DISASSEMBLY PROCEDURES 4
SIGNAL ROUTE SELECT PATTERNS 5
IC BLOCK DIAGRAM 5
PRINTED CIRCUIT BOARD . . . . . 6 ~ 9
SCHEMATIC DIAGRAM 10
WIRING 11
PARTS LIST . . . . . 13 ~ 17

004630

SINCE 1887 YAMAHA

NIPPON GAKKI CO., LTD. HAMAMATSU, JAPAN

2.6k-364 Printed in Japan '85.6

TO SERVICE PERSONNEL

1. Critical Components Information.
   Components having special characteristics are marked ! and must be replaced with parts having specifications equal to those originally installed.

2. Leakage Current Measurement (For 120 V Model Only).
   When service has been completed, it is imperative that you verify that all exposed conductive surfaces are properly insulated from supply circuits.

- Meter impedance should be equivalent to 1500 ohm shunted by 0.15μF.
- Leakage current must not exceed 0.5mA.
- Be sure to test for leakage with the AC plug in both polarities.

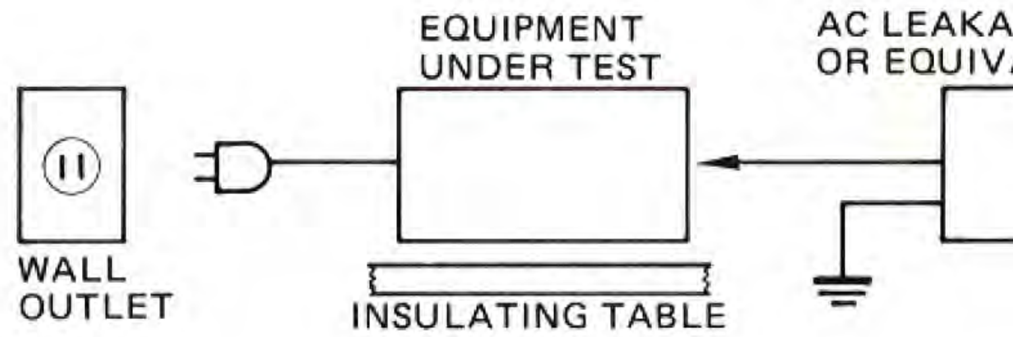

SPECIFICATIONS

Input Sensitivity/Impedance	
LINE IN, TAPE	1V/47kΩ
MIC	0.3mV/47kΩ
Rated Output/Impedance	
LINE OUT, REC OUT	1V/600Ω
Frequency Response	10 to 100kHz, $^{+0.5}_{-1}$dB
Center Frequencies	30Hz, 60Hz, 120Hz, 240Hz, 480Hz, 1kHz, 2kHz, 4kHz, 8kHz, 16kHz
Equalizer Control Range	±15dB
Signal-to-Noise Ratio (Input shorted, IHF-A Network, 1V output)	110dB
Total Harmonic Distortion (20 to 20kHz, 1V output)	0.005%
Maximum Output (T.H.D. 0.1%)	10V
Subsonic Filter Cutoff Frequency (Continuously variable)	5 to 30 Hz, 12dB/Oct
Rumble Reduce	Converts stereo signals below 100Hz to mono.
Pink Noise Output	150mV r.m.s.
Display	10 bands, Switchable between L or R, L + R, MIC

Power Supply	
U, C models	AC 120V, 60Hz
A, K models	AC 240V, 50Hz
G model	AC 220V, 50Hz
R model	AC 115/230V, 50H
Power Consumption	13W
AC Outlet (U, C, R models)	UNSWITCHED x 1 200W max.
Dimensions (W x H x D)	435 x 112 x 275 m (17-1/8"x4-7/16"x
Weight	4.4 kg (9 lbs. 11 oz
Accessories	Pin plug cords (2) MM-60 Electret Co Mic Stand Dry battery "AA"

Specifications subject to change without notice.

(U) ..... U.S.A. model
(C) ..... Canadian model
(A) ..... Australian model
(G) ..... European model
(K) ..... British model
(R) ..... General model

REAR PANELS

▼U.S.A. & Canadian models

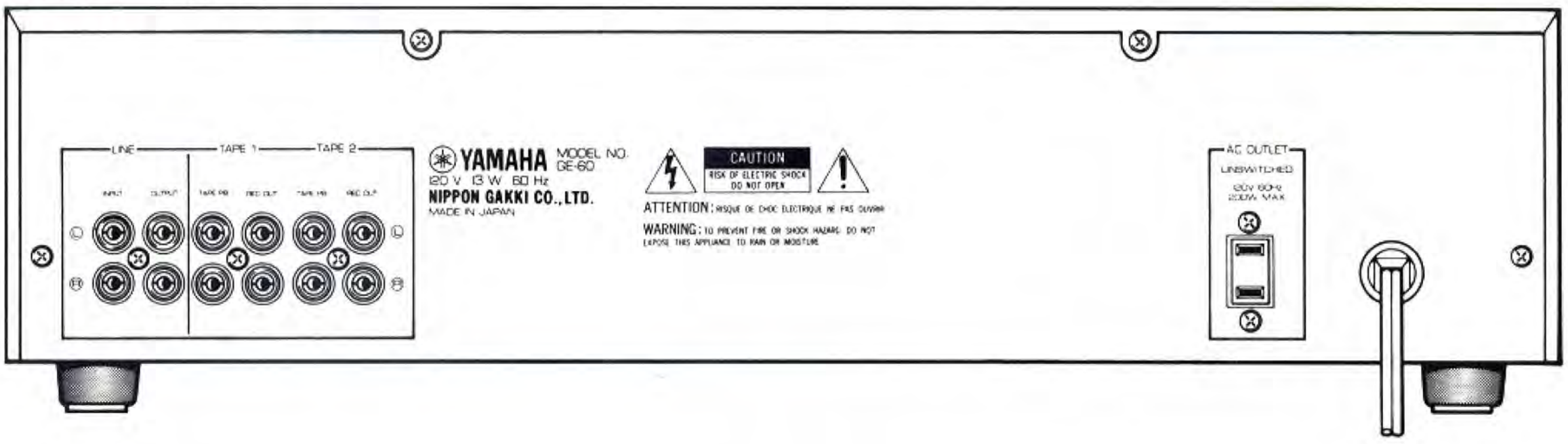

▼General model

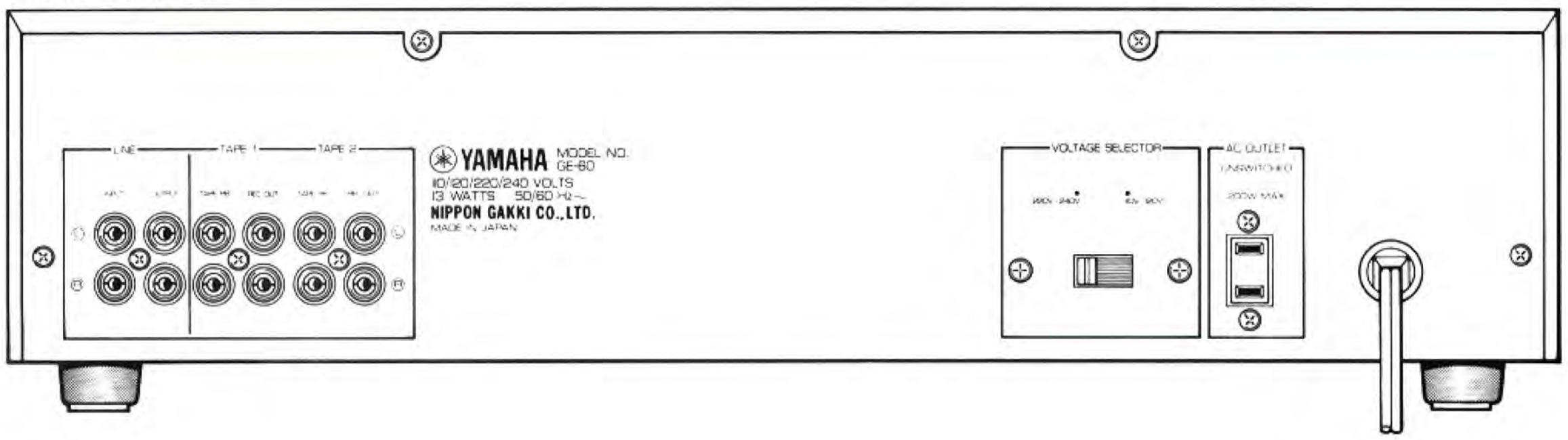

▼British & Australian models

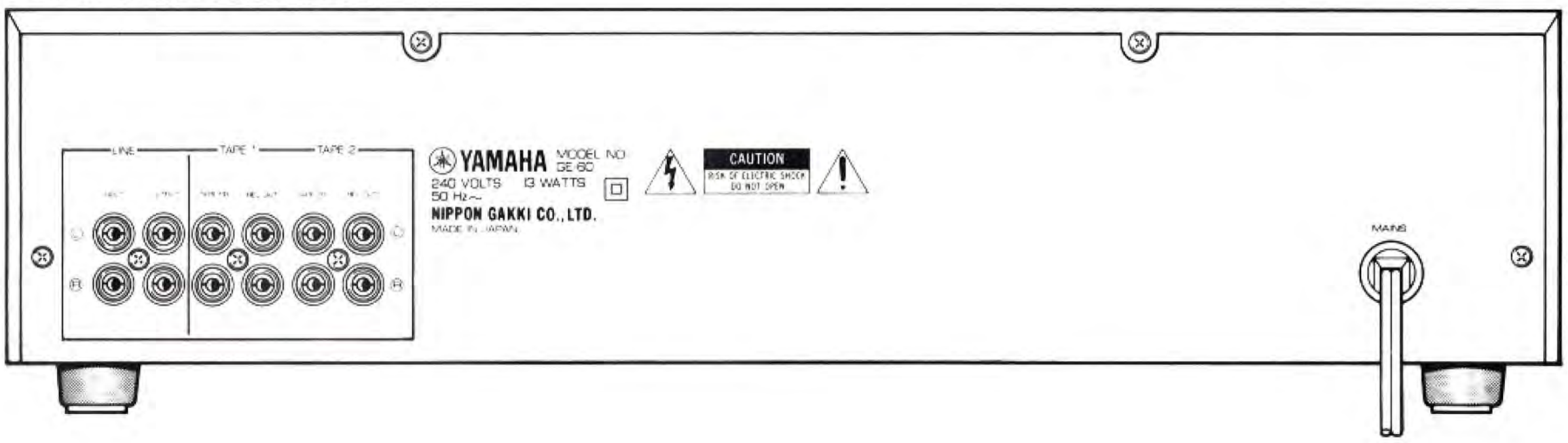

▼European model

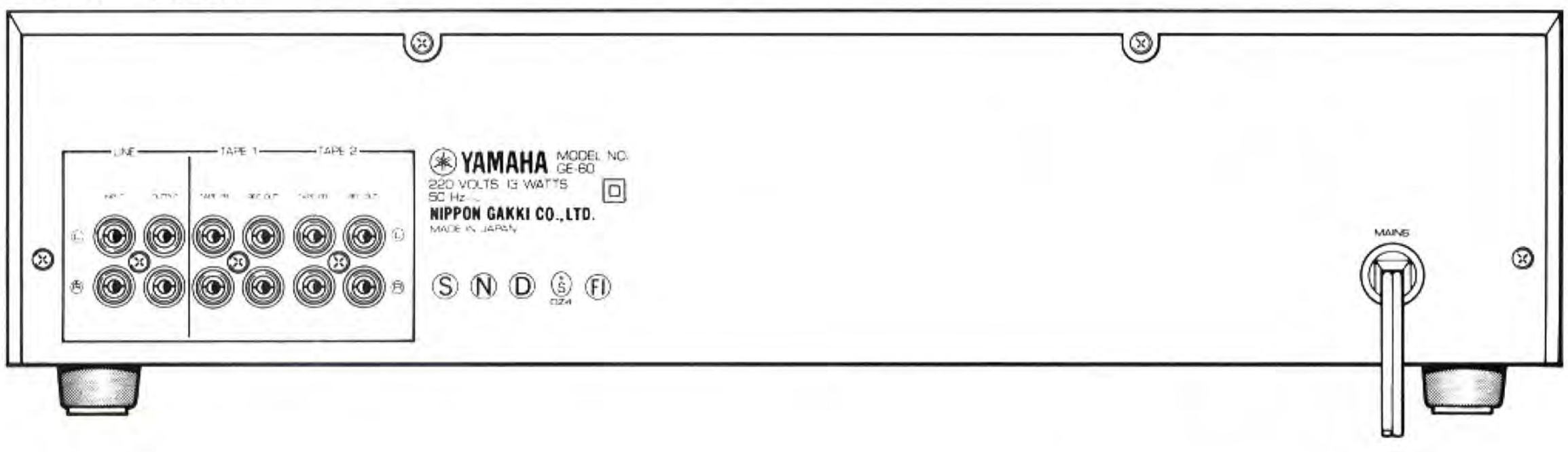

BLOCK DIAGRAM

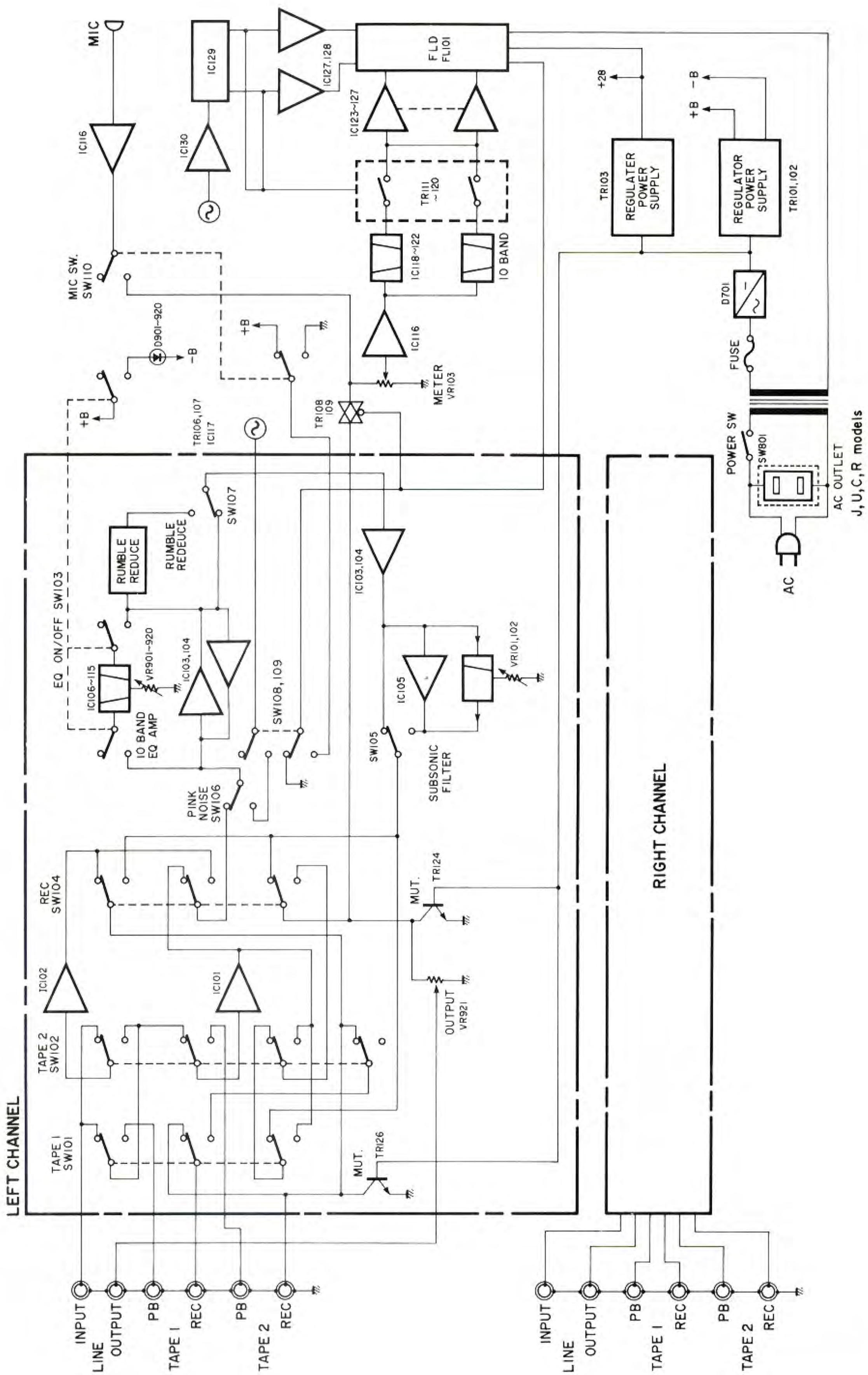

■ INTERNAL VIEW

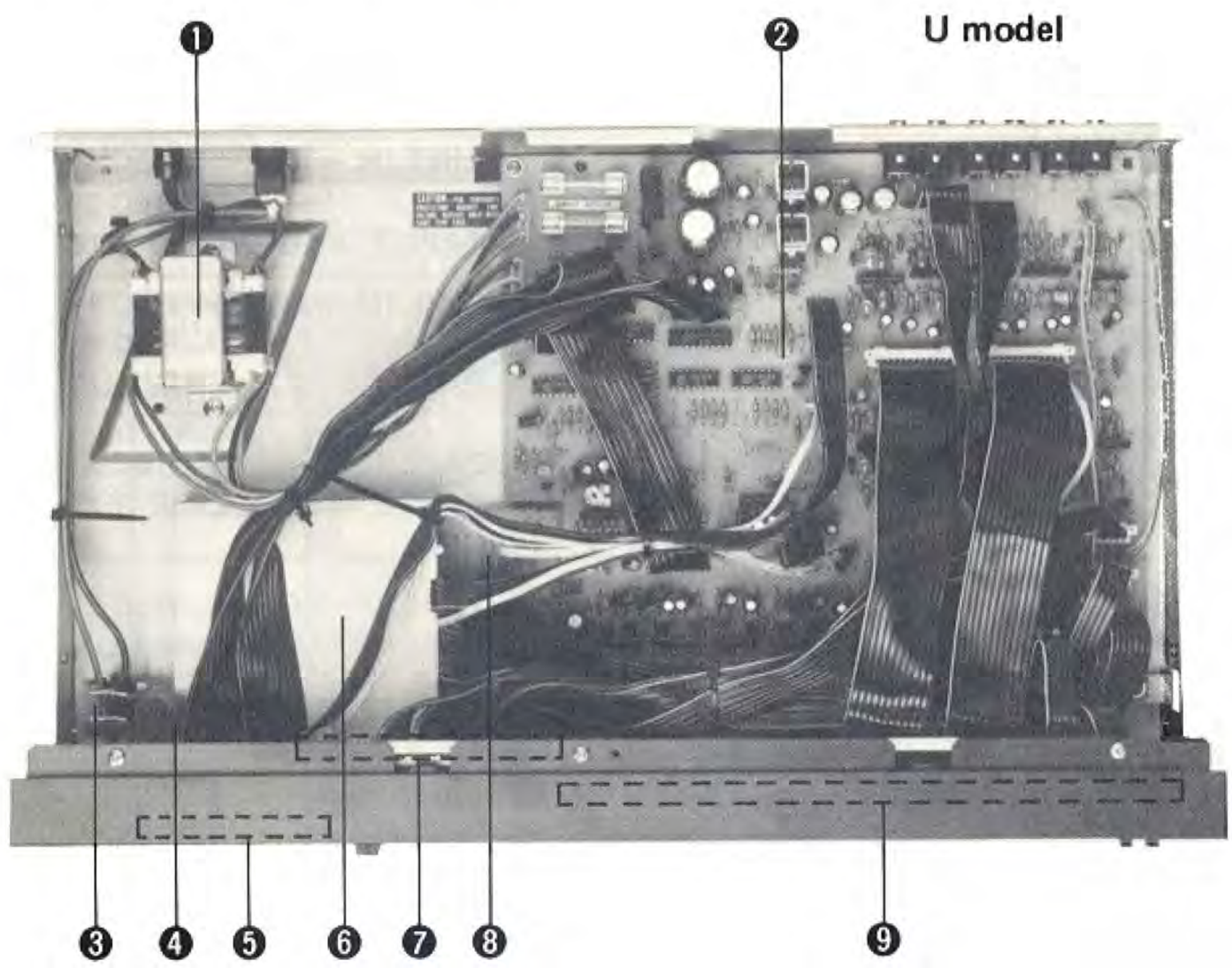

❶ POWER TRANSFORMER
U.S.A. & Canadian models: GX60008
European model: GX60009
British & Australian models: GX60011
General model: GX60010
❷ MAIN CIRCUIT BOARD (5)
❸ MAIN CIRCUIT BOARD (4)
❹ POWER SWITCH
❺ MAIN CIRCUIT BOARD (3)
❻ SHIELDING PLATE
❼ MAIN CIRCUIT BOARD (2)
❽ MAIN CIRCUIT BOARD (1)
❾ SLIDE VOLUME UNIT

■ DISASSEMBLY PROCEDURES

(Remove parts in order as numbered.)

1. Removal of Top Cover

Remove 6 screws (①) in Fig. 1, and raise the rear side of the Top Cover, and slide it back.

2. Removal of Front Panel

Remove 6 screws (②) in Fig. 1, and puli the Front Panel forward.

3. Removal of Shielding Plate

Remove screw (③) in Fig. 1, and remove Shielding Plate.

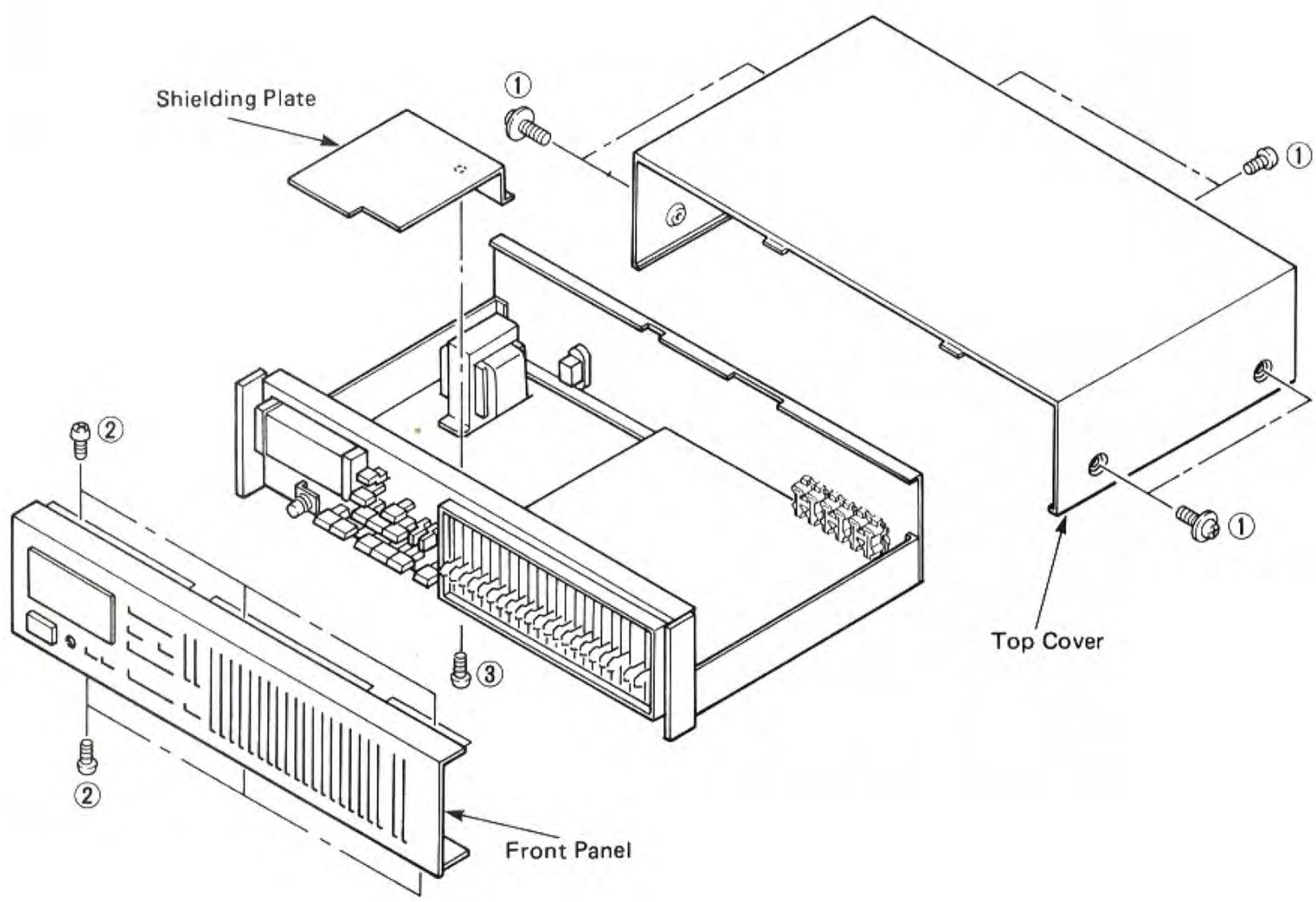

Fig. 1

SIGNAL ROUTE SELECT PATTERNS

SWITCH SETTING			SIGNAL ROUTE	SWITCH SETTING			SIGNAL ROUTE
TAPE 1	TAPE 2	EQ MODE	INPUT-EQ-OUTPUT	TAPE 1	TAPE 2	EQ MODE	INPUT-EQ-OUTPUT
OFF	OFF	ON	LINE IN — EQ — LINE OUT REC 1 REC 2	OFF	ON	ON	LINE IN — REC 1 REC 2 TAPE 2 — EQ — LINE OUT
OFF	OFF	REC	LINE IN — EQ — LINE OUT EQ — REC 1 REC 2	OFF	ON	REC	LINE IN — EQ — REC 1 REC 2 TAPE 2 — LINE OUT
ON	OFF	ON	LINE IN — REC 1 REC 2 TAPE 1 — EQ — LINE OUT	ON	ON	ON	TAPE 1 — REC 2 TAPE 2 — EQ — LINE OUT
ON	OFF	REC	LINE IN — EQ — REC 1 REC 2 TAPE 1 — LINE OUT	ON	ON	REC	TAPE 1 — EQ — REC 2 TAPE 2 — LINE OUT

IC BLOCK DIAGRAM

IC123 ~ 125: LA6339

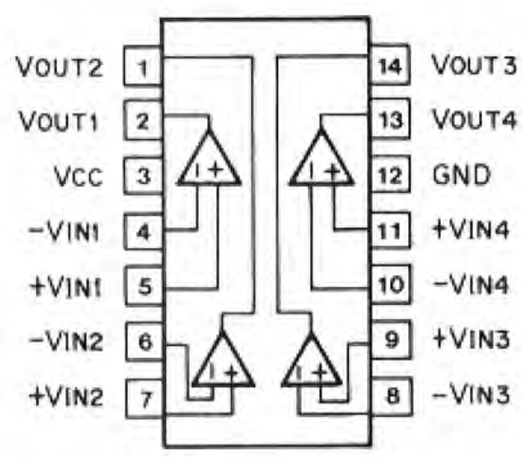

IC101 ~ 105: NJM2041DD

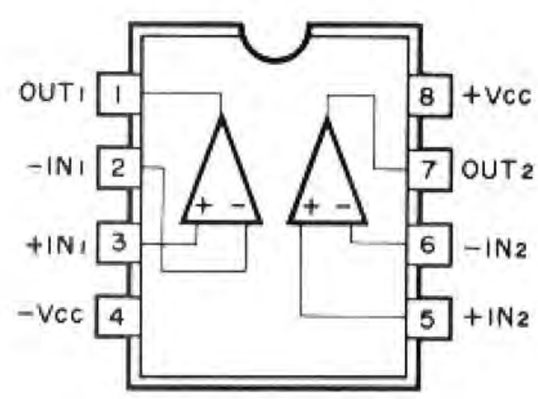

IC106 ~ 122: M5218L

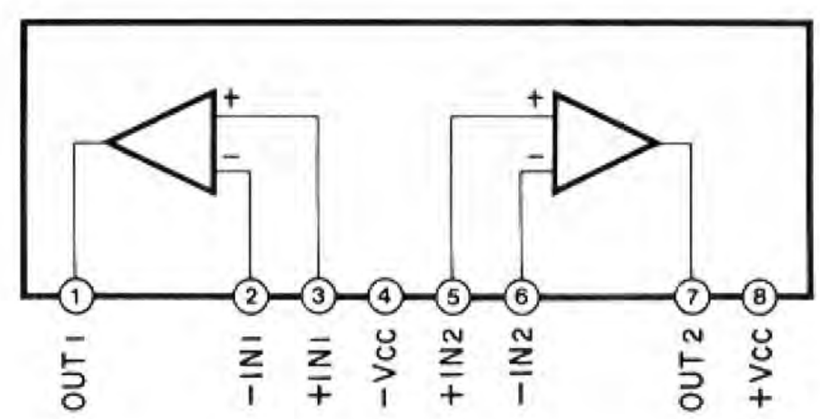

IC126 ~ 128: LB1290

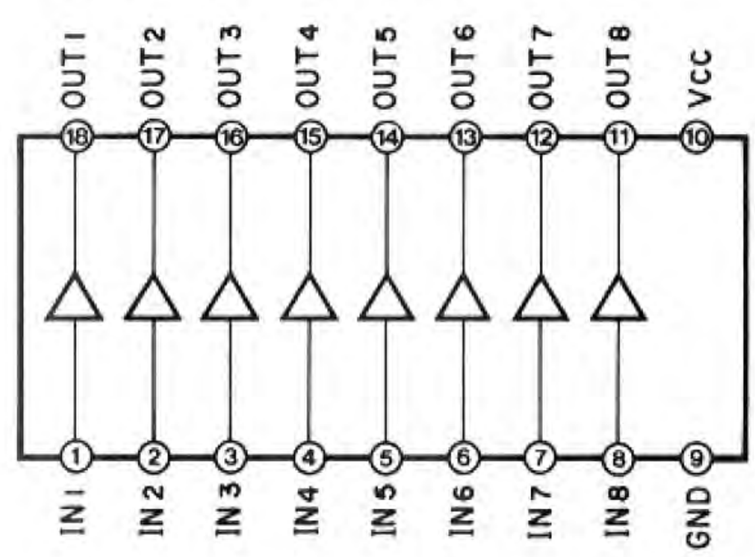

IC130: TC4069UB

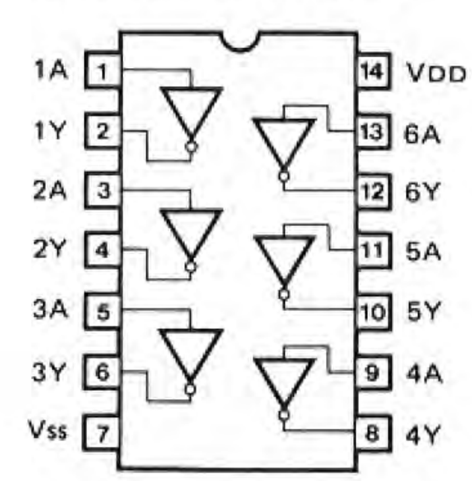

IC129: TC4017B

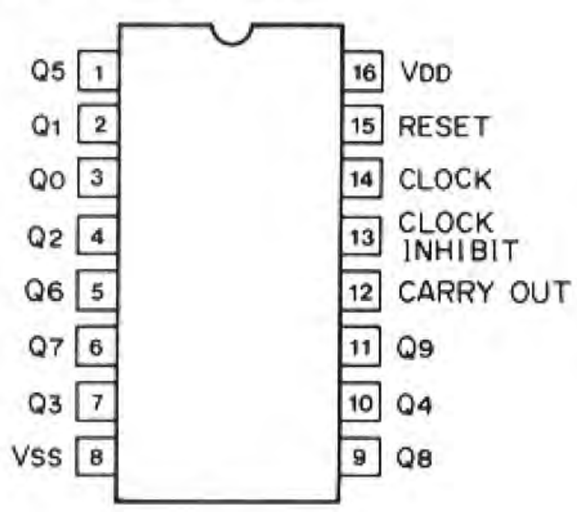

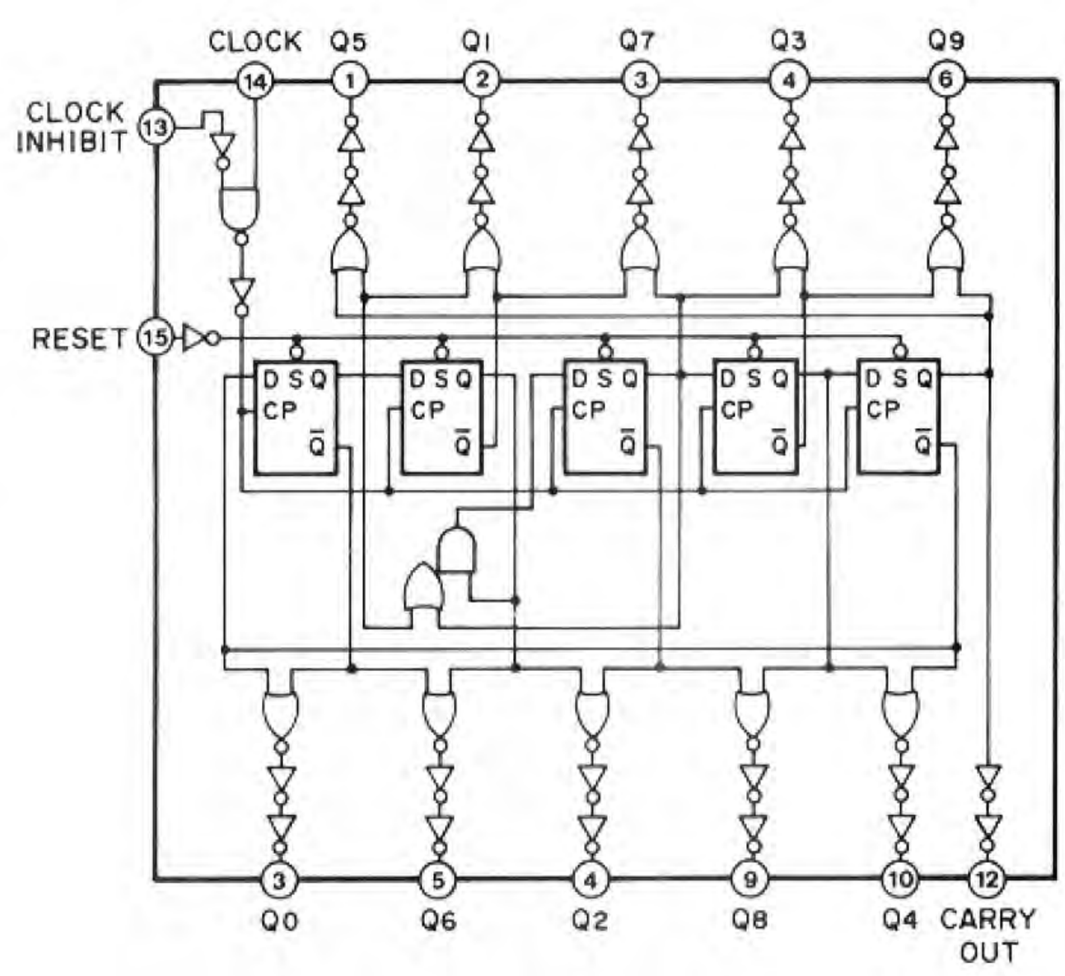

■PRINTED CIRCUIT BOARD(Pattern side)

Main Circuit Board (5)

Note)
文字面：Component side

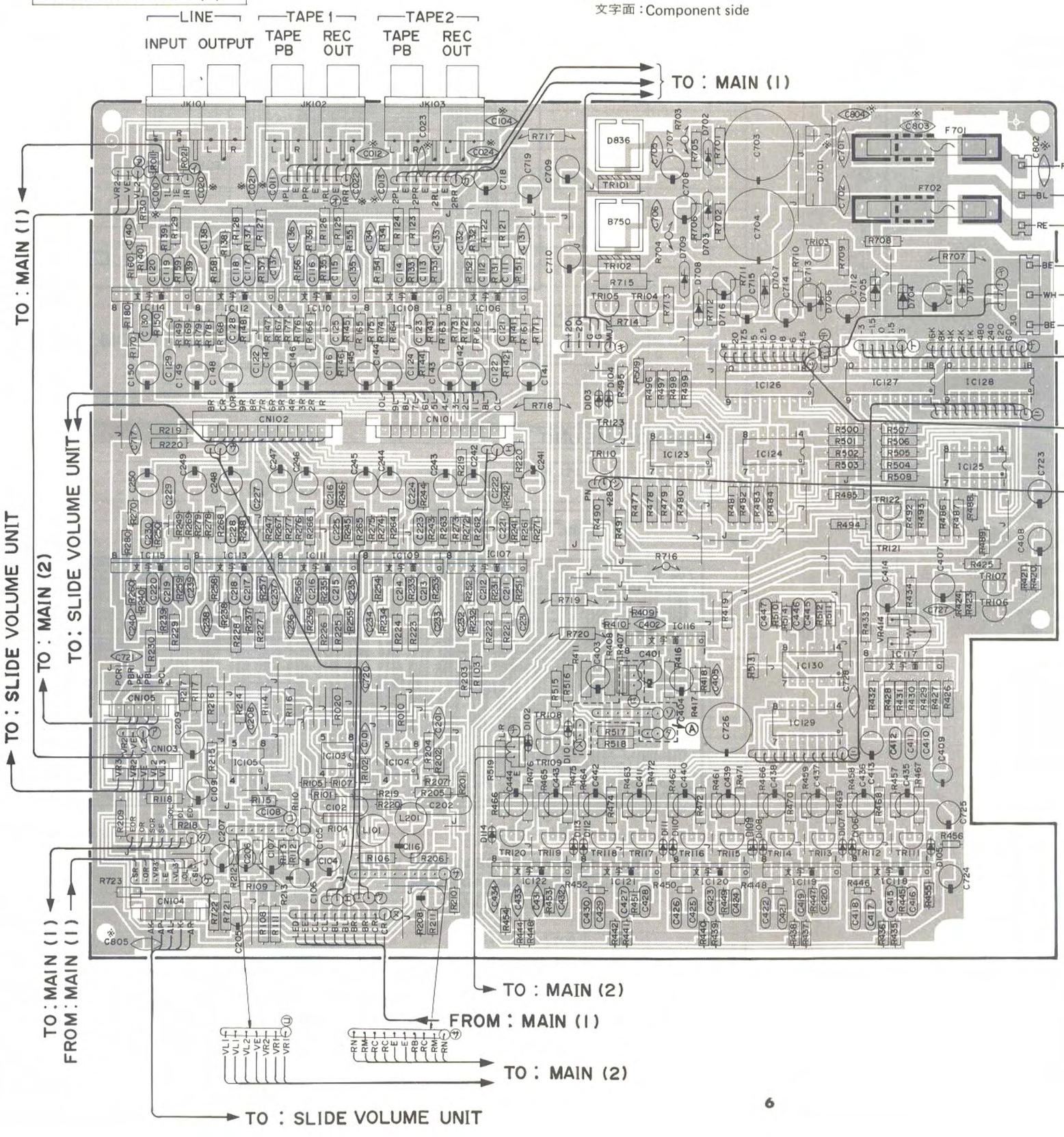

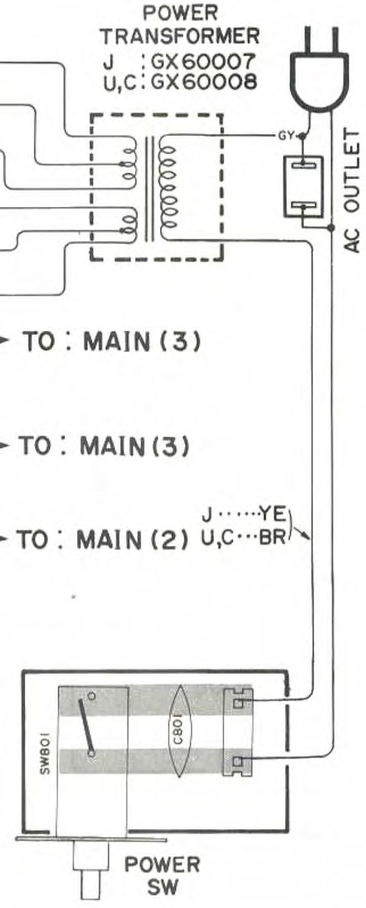

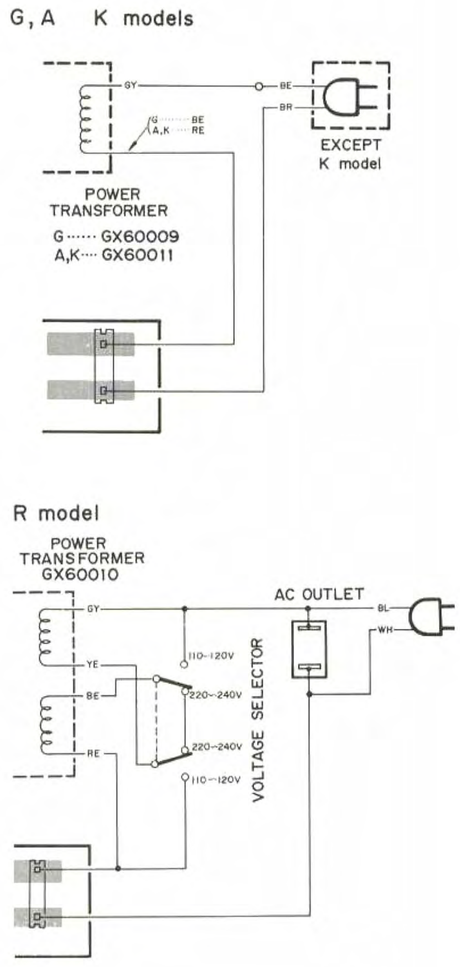

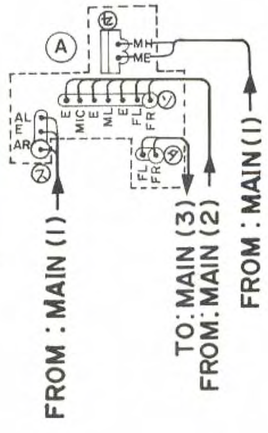

(Note) ※ marked

	G	U,C,A,K,R,J
R011, 021	1K	SHORT
C010~014, 020~024	330P/50	OPEN
C802~805	0.047/50	OPEN

■PRINTED CIRCUIT BOARD (Pattern side)

Main Circuit Board (1)

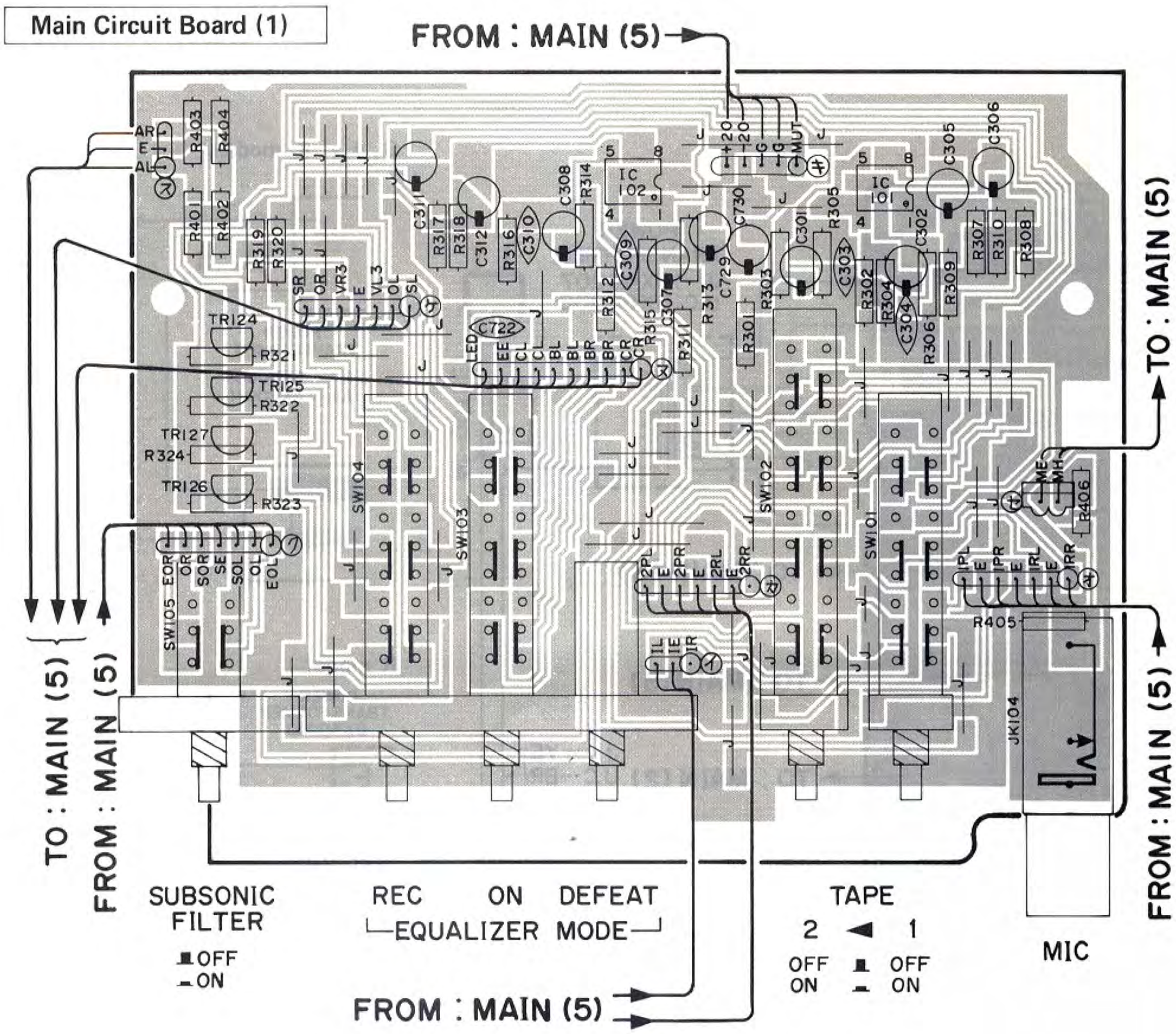

Main Circuit Board (2)

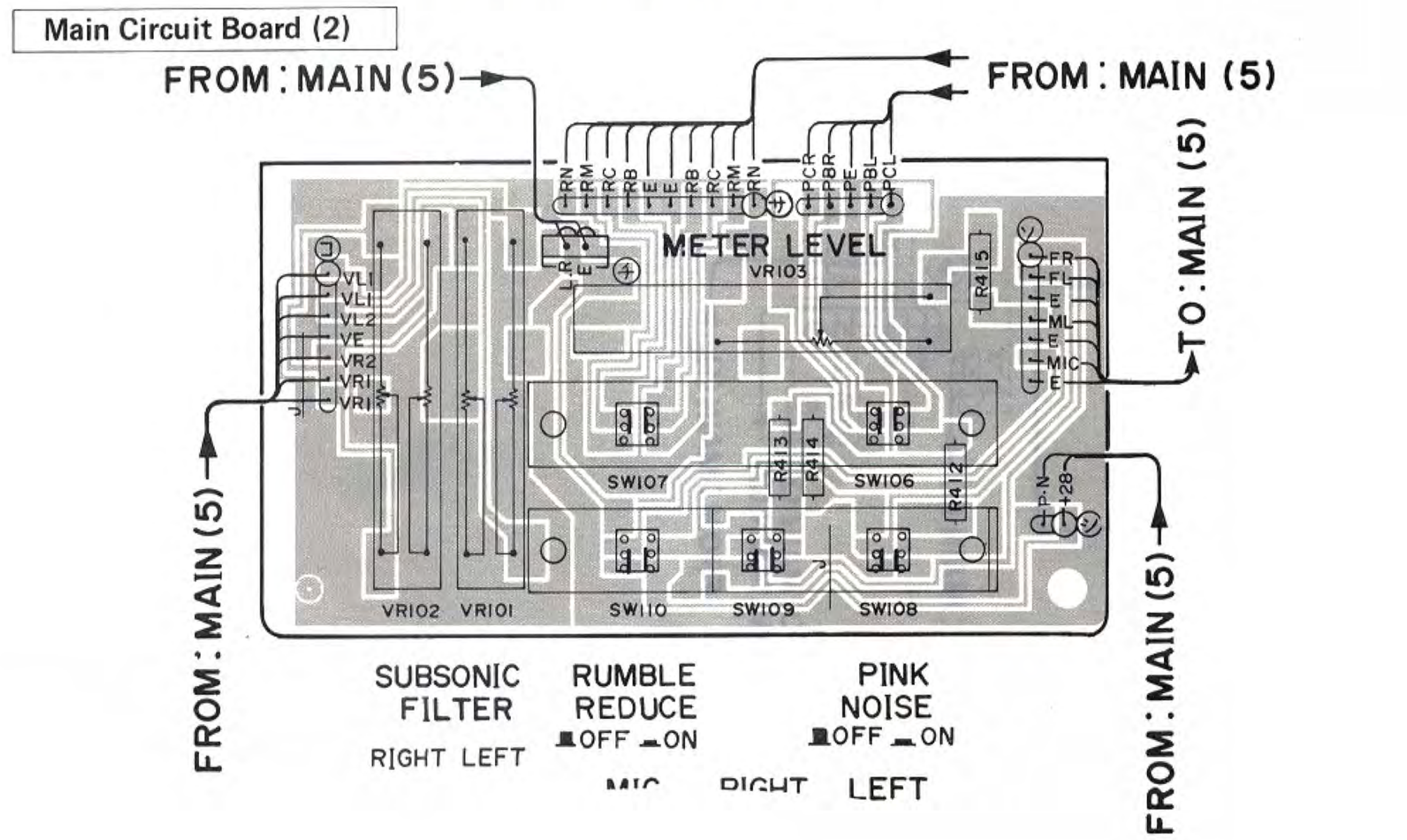

Main Circuit Board (3)

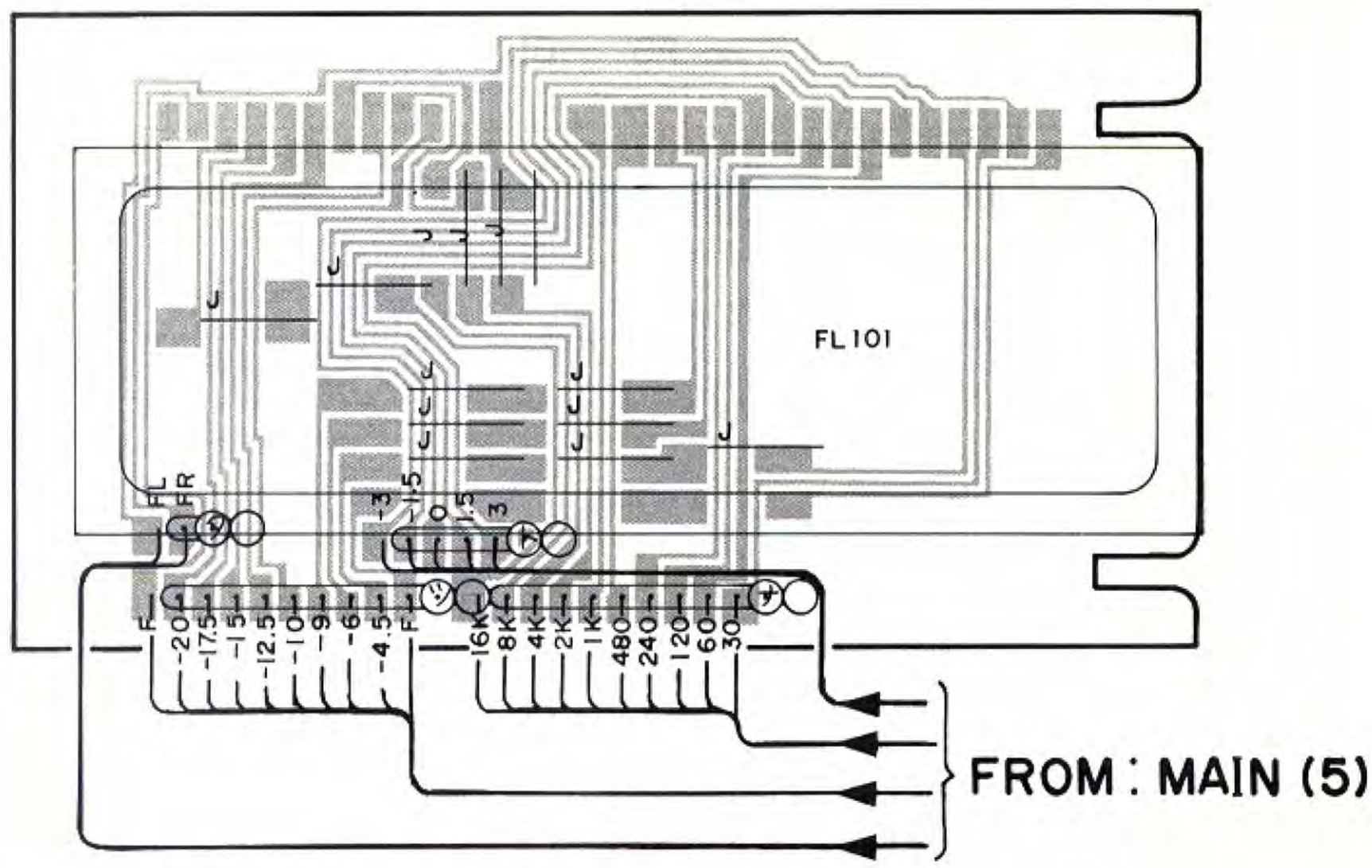

SLIDE VOLUME UNIT

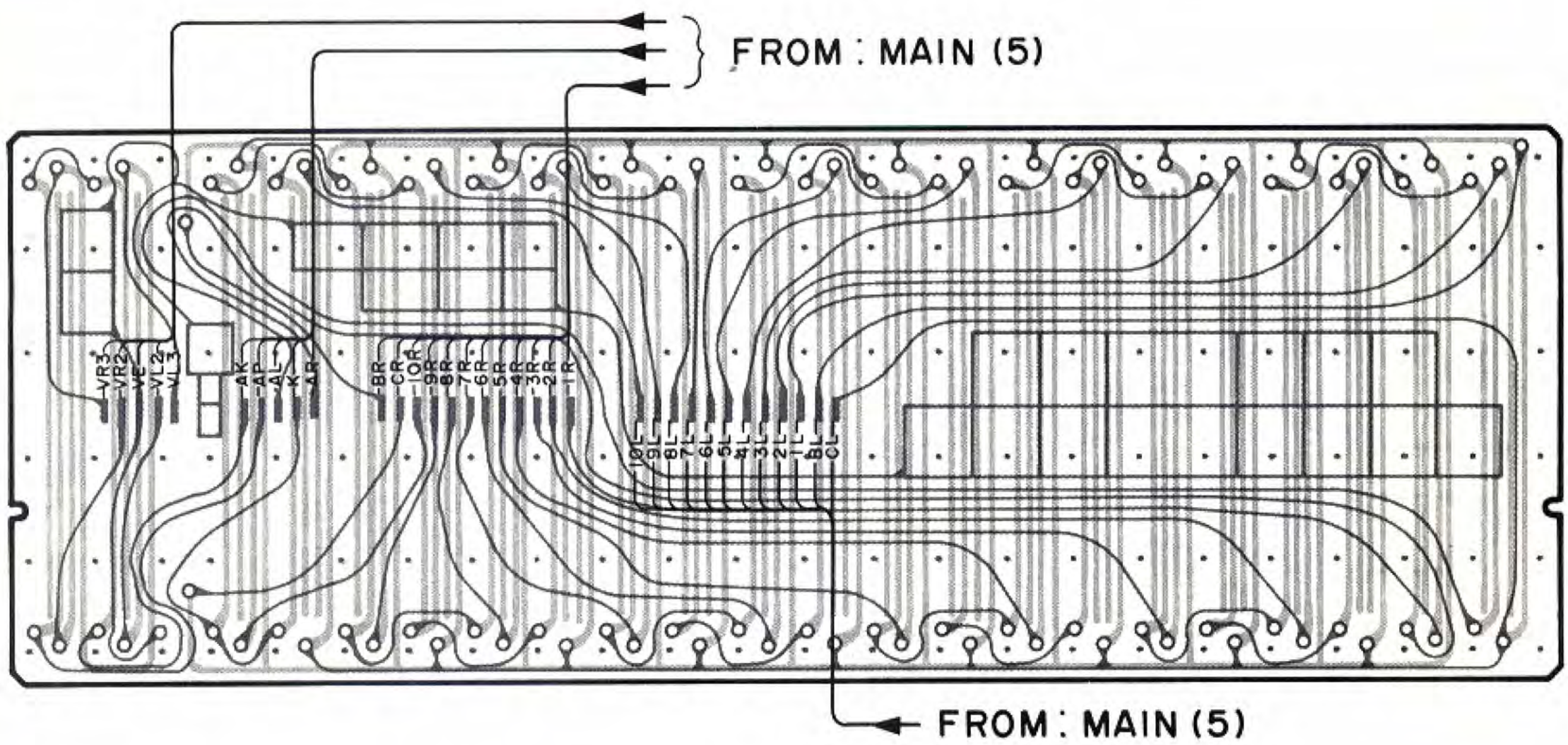

Don't disassemble SLIDE VOLUME UNIT.
It must be replaced with HX600460.

■ SCHEMATIC DIAGRAM

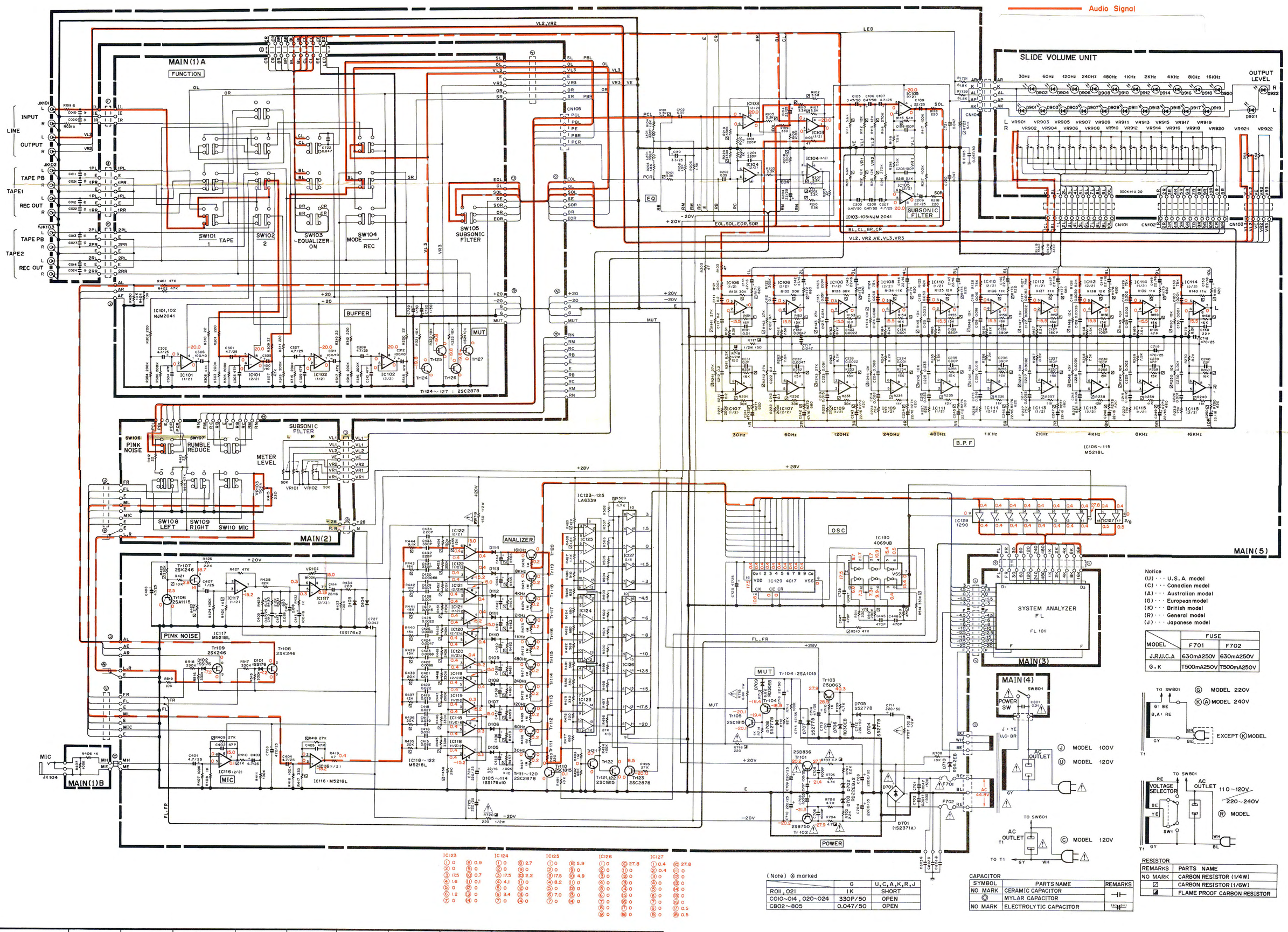

Notice
(U) ··· U.S.A. model
(C) ··· Canadian model
(A) ··· Australian model
(G) ··· European model
(K) ··· British model
(R) ··· General model
(J) ··· Japanese model

MODEL	FUSE	
	F701	F702
J,R,U,C,A	630mA250V	630mA250V
G,K	T500mA250V	T500mA250V

Ⓖ MODEL 220V
Ⓚ Ⓐ MODEL 240V
EXCEPT Ⓚ MODEL
Ⓙ MODEL 100V
Ⓤ MODEL 120V
Ⓒ MODEL 120V
110~120V
220~240V
Ⓡ MODEL

RESISTOR

REMARKS	PARTS NAME
NO MARK	CARBON RESISTOR (1/4W)
▨	CARBON RESISTOR (1/6W)
◪	FLAME PROOF CARBON RESISTOR

CAPACITOR

SYMBOL	PARTS NAME	REMARKS
NO MARK	CERAMIC CAPACITOR	⊣⊢
◎	MYLAR CAPACITOR	
NO MARK	ELECTROLYTIC CAPACITOR	(+)⊣⊢(−)

(Note) ※ marked

	G	U,C,A,K,R,J
R011, 021	1K	SHORT
C010~014, 020~024	330P/50	OPEN
C802~805	0.047/50	OPEN

IC123		IC124		IC125		IC126		IC127	
① 0	⑧ 0.9	① 0	⑧ 2.7	① 0	⑧ 5.9	① 0	⑯ 27.8	① 0.4	⑯ 27.8
② 0	⑨ 0	② 0	⑨ 0	② 0	⑨ 0	② 0	⑪ 0	② 0.4	⑪ 0
③ 17.5	⑩ 0.7	③ 17.5	⑩ 2.2	③ 17.5	⑩ 4.9	③ 0	⑫ 0	③ 0	⑫ 0
④ 1.6	⑪ 0.1	④ 4.1	⑪ 0	④ 8.2	⑪ 0	④ 0	⑬ 0	④ 0	⑬ 0
⑤ 0	⑫ 0	⑤ 0	⑫ 0	⑤ 0	⑫ 0	⑤ 0	⑭ 0	⑤ 0	⑭ 0
⑥ 1.2	⑬ 0	⑥ 3.4	⑬ 0	⑥ 7.0	⑬ 0	⑥ 0	⑮ 0	⑥ 0	⑮ 0
⑦ 0	⑭ 0	⑦ 0	⑭ 0	⑦ 0	⑭ 0	⑦ 0	⑯ 0	⑦ 0	⑯ 0
						⑧ 0	⑰ 0	⑧ 0	⑰ 0.5
						⑨ 0	⑱ 0	⑨ 0	⑱ 0.5

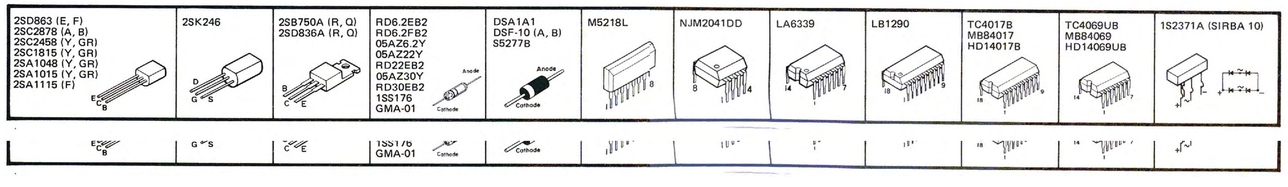

- *All voltages are measured with a 10MΩ/V DC electric volt meter.*
- *Components having special characteristics are marked ⚠ and must be replaced with parts having specifications equal to those originally installed.*
- *Schematic diagram is subject to change without notice.*

- *Schematic diagram is subject to change without notice.*

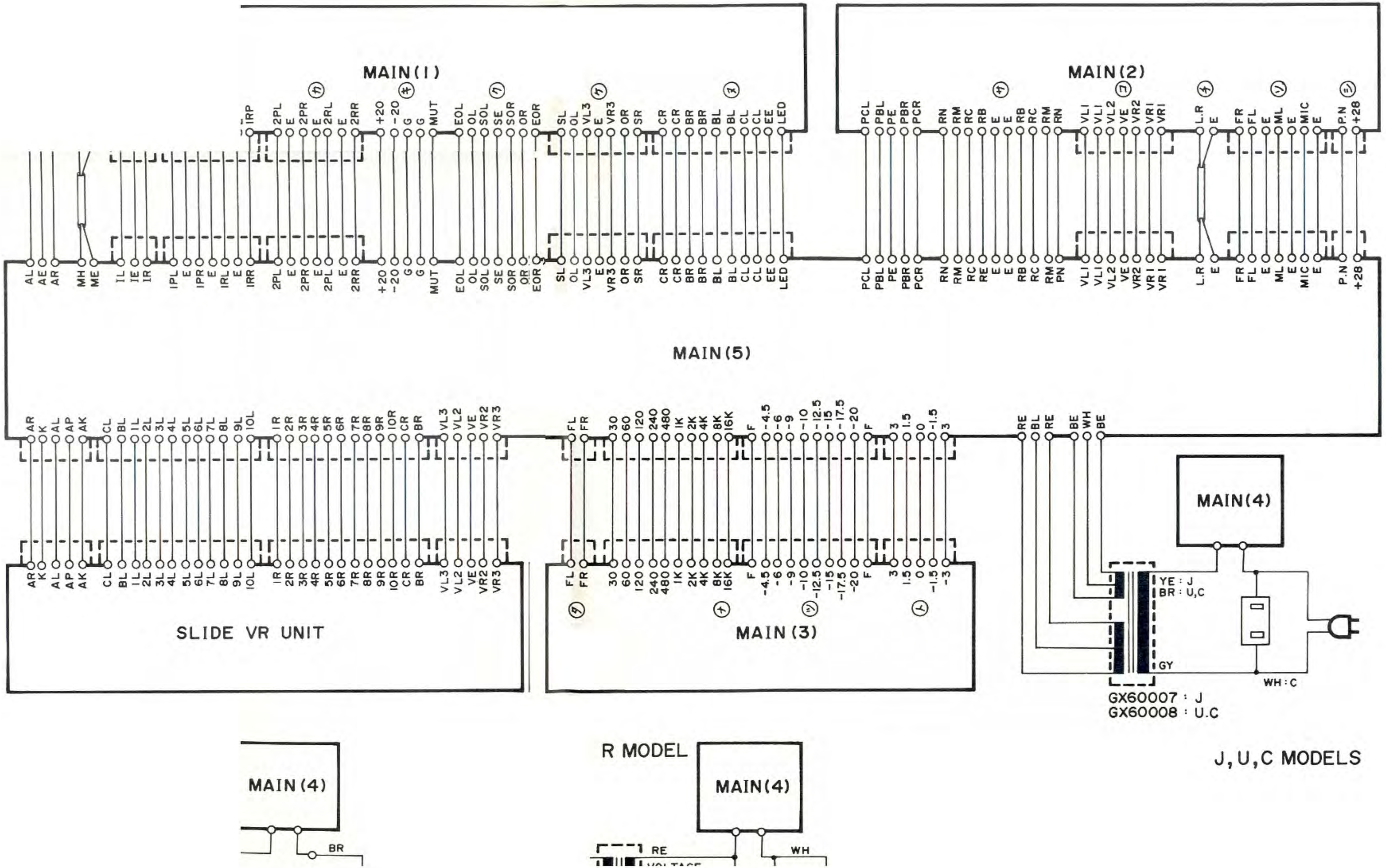
MAIN(1)
MAIN(2)
MAIN(5)
SLIDE VR UNIT
MAIN(3)
MAIN(4)
YE : J
BR : U,C
GY
WH : C
GX60007 : J
GX60008 : U.C
J, U, C MODELS
MAIN(4)
BR
R MODEL
MAIN(4)
RE
WH

PARTS LIST

■ WARNING

Components having special characteristics are marked ⚠ and must be replaced with parts having specifications equal to those originally installed.

- There is no discription about 1/6W carbon resistors in this parts list. Use the "Part NO." HF85○○○○ or equivalent.

■ ELECTRICAL PARTS

	Ref. No.	Part No.	Description		部品名	Remarks	Common Model	Markets	ランク
※		*XX 64 97 10*	*Main Circuit Board*		メインシート			U,C,R,A,J	
※		*XX 64 97 20*	〃		〃			G,K	
		FG 41 12 20	Ceramic Cap.	22pF 50V	セラコン	C140,240			
		FG 41 14 70	〃	47pF 50V	〃	C139,239,303,304,309,310,402,405			
		FG 41 21 00	〃	100pF 50V	〃	C103,108,138,203,208,238			
		FG 21 21 80	〃	180pF 50V	〃	C137,237			
		FG 41 23 90	〃	390pF 50V	〃	C136,236			
		FG 41 26 80	〃	680pF 50V	〃	C135,235			
		FG 41 31 00	〃	1000pF 50V	〃	C134,234,705,706			
		FG 41 32 20	〃	2200pF 50V	〃	C133,233			
		FG 41 34 70	〃	4700pF 50V	〃	C132,232			
※		FX 60 08 80	〃	0.01μF 50V	〃	C131,231			
※		FX 60 08 70	〃	0.047μF 50V	〃	C717,720~722,727,728			
		FG 44 44 70	〃	0.047μF 50V	〃	C802~805		G	
		FH 12 34 70	〃	0.0047μF 500V	〃	C701,702			
		FG 41 22 20	〃	220pF 50V	〃	C101,201,432,434			
		FG 41 23 30	〃	330pF 50V	〃	C431,433			
		FG 41 23 30	〃	330pF 50V	〃	C010~014,020~024		G	
		Fi 41 41 00	〃	0.01μF VA-1	〃	C801			⚠
		UA 25 24 70	Mylar Cap.	470pF 50V	マイラーコン	C445~447			
		UA 25 26 80	〃	680pF 50V	〃	C430			
		UA 25 31 00	〃	0.001μF 50V	〃	C120,130,220,230,428,429			
		UA 25 31 50	〃	0.0015μF 50V	〃	C427			
		UA 25 32 00	〃	0.002μF 50V	〃	C119,129,219,229			
		UA 25 32 20	〃	0.0022μF 50V	〃	C426			
		FA 15 33 30	〃	0.0033μF 50V	〃	C425			
		UA 25 33 90	〃	0.0039μF 50V	〃	C118,128,218,228			
		UA 25 34 70	〃	0.0047μF 50V	〃	C424			
		UA 25 36 80	〃	0.0068μF 50V	〃	C422,423			
		UA 25 38 20	〃	0.0082μF 50V	〃	C117,127,217,227			
		UA 25 41 00	〃	0.01μF 50V	〃	C421			
		UA 25 41 50	〃	0.015μF 50V	〃	C412			
		UA 25 41 60	〃	0.016μF 50V	〃	C116,126,216,226			
		UA 25 42 20	〃	0.022μF 50V	〃	C420			
		UA 25 42 70	〃	0.027μF 50V	〃	C418			
		UA 25 43 30	〃	0.033μF 50V	〃	C115,125,215,225,419			
		UA 25 43 90	〃	0.039μF 50V	〃	C411,417			
		UA 25 45 10	〃	0.051μF 50V	〃	C113,123,213,223,416			
		UA 25 46 80	〃	0.068μF 50V	〃	C114,124,214,224			
		FA 15 48 20	〃	0.082μF 50V	〃	C415			
		UA 25 51 00	〃	0.1μF 50V	〃	C112,122,212,222,410			
		FA 15 52 00	〃	0.2μF 50V	〃	C111,121,211,221			
		UA 55 53 90	〃	0.39μF 50V	〃	C102,202			
		UJ 16 61 00	Electrolytic Cap.	1μF 50V	ケミコン	C713,729,730,407			
		UJ 12 81 00	〃	100μF 10V	〃	C305,306,311,312			
		UW 94 64 70	〃	4.7μF 25V	〃	C107,207,301,302,307,308,401,403,404			
		UW 83 72 20	〃	22μF 16V	〃	C143~150,243~250,414,435~444			
		UJ 14 72 20	〃	22μF 25V	〃	C104,109,204,209			
		UW 86 72 20	〃	22μF 50V	〃	C716			
		UJ 13 74 70	〃	47μF 16V	〃	C141,142,241,242			
		UW 84 74 70	〃	47μF 25V	〃	C408,723			
		UW 95 74 70	〃	47μF 35V	〃	C714,715			
		UW 84 81 00	〃	100μF 25V	〃	C707,708,413			

※New Parts（新規部品）

	Ref. No.	Part No.	Description		部品名	Remarks	Common Model	Markets	ランク
		UJ 14 82 20	Electrolytic Cap.	220μF 25V	ケミコン	C709,710,724,725			
		UW 86 82 20	〃	220μF 50V	〃	C711,712			
		UW 84 84 70	〃	470μF 25V	〃	C718,719,726			
		UW 85 92 20	〃	2200μF 35V	〃	C703,704			
※		FX 60 08 50	〃	0.47μF 50V	〃	C105,106,205,206,409			
※		FX 60 08 60	〃	3.3μF 25V	〃	C110			
※		iX 60 42 00	Transistor	2SC2878(A,B)	トランジスタ	TR111~120,123~127			
		iC 18 15 50	〃	2SC1815 (Y,GR)	〃	TR105,110,121,122			
		iA 10 15 31	〃	2SA1015 (Y,GR)	〃	TR104			
※		iX 60 42 10	〃	2SA1115 (F)	〃	TR106			
※		iX 60 42 30	〃	2SD836A(R,Q,P)	〃	TR101			⚠
※		iX 60 42 20	〃	2SB750A(R,Q,P)	〃	TR102			⚠
		iX 60 01 50	〃	2SD863 (E,F)	〃	TR103	GE-5		
※		iX 60 42 40	FET	2SK246	FET	TR107~109			
		iX 60 01 70	Diode	S5277B	ダイオード	D704,705,707,708	GE-5		
※		iX 60 41 40	〃	GMA-01	〃	D101~114			
		iH 00 09 70	Diode Bridge	1S2371A(SIRBA10)	ダイオードブリッジ	D701			⚠
※		iX 60 42 50	Zener Diode	RD6.2EB2	ツェナーダイオード	D710			
※		iX 60 42 60	〃	RD22EB2	〃	D702,703			
※		iX 60 42 70	〃	RD30EB2	〃	D706,709			
		iG 06 92 00	IC	NJM2041DD	IC	IC101~105			
		iG 05 82 00	〃	M5218L	〃	IC106~122			
※		iX 60 41 80	〃	LA6339	〃	IC123~125			
※		iX 60 41 90	〃	LB1290	〃	IC126~128			
		iG 05 08 00	〃	TC4017BP	〃	IC129			
		iG 00 17 20	〃	TC4069UBP	〃	IC130			
		HJ 35 42 20	Carbon Resistor	22Ω 1/4W	カーボン抵抗	R309,310,319,320,412,413			
		HJ 35 44 70	〃	47Ω 〃	〃	R103,203,419			
		HJ 35 52 20	〃	220Ω 〃	〃	R118,209,218,301,302,311,312,415,434,478,490			
		HJ 35 53 30	〃	330Ω 〃	〃	R109,479			
		HJ 35 53 90	〃	390Ω 〃	〃	R480			
		HJ 35 55 60	〃	560Ω 〃	〃	R481,482			
		HJ 35 56 80	〃	680Ω 〃	〃	R431,477,483,484			
		HJ 35 58 20	〃	820Ω 〃	〃	R485			
		HJ 35 59 10	〃	910Ω 〃	〃	R486			
		HJ 35 61 00	〃	1kΩ 〃	〃	R010,020,406,408,426,432,710,714			
		HK 35 61 10	〃	1.1kΩ 〃	〃	R487			
		HJ 35 61 50	〃	1.5kΩ 〃	〃	R106,206			
		HJ 35 61 80	〃	1.8kΩ 〃	〃	R104,204			
		HJ 35 62 20	〃	2.2kΩ 〃	〃	R425,430,701,702			
		HJ 35 64 70	〃	4.7kΩ 〃	〃	R705,706,709			
		HJ 35 65 10	〃	5.1kΩ 〃	〃	R215			
		HJ 35 65 60	〃	5.6kΩ 〃	〃	R211			
		HJ 35 66 80	〃	6.8kΩ 〃	〃	R429,713,721,722			
		HK 35 67 50	〃	7.5kΩ 〃	〃	R116,162,165,168,216,262,265,268			
		HJ 35 68 20	〃	8.2kΩ 〃	〃	R161,163,164,166,261,263,264,266			
		HJ 35 71 00	〃	10kΩ 〃	〃	R321~324,403,404,491,519,708			
		HJ 35 71 20	〃	12kΩ 〃	〃	R428			
		HJ 35 72 70	〃	27kΩ 〃	〃	R495~508			

※New Parts（新規部品）

Ref. No.	Part No.	Description		部品名	Remarks	Common Model	Markets	ランク
	HJ 35 74 70	Carbon Resistor	47kΩ 1/4W	カーボン抵抗	R307,308,317,318,401 402,414,427			
	HJ 35 76 80	〃	68kΩ 〃	〃	R492			
	HK 35 77 50	〃	75kΩ 〃	〃	R124,126,127,129,130, 224,226,227,229,230			
	HJ 35 78 20	〃	82kΩ 〃	〃	R125,128,225,228,712			
	HJ 35 81 00	〃	100kΩ 〃	〃	R117,208,217,405,407, 411,416,433,494,711			
	HK 35 82 00	〃	200kΩ 〃	〃	R121～123,221～223,303～306, 313～316			
	HJ 35 82 70	〃	270kΩ 〃	〃	R114,214			
	HJ 35 83 30	〃	330kΩ 〃	〃	R119,120,515～518			
	HJ 35 91 00	〃	1MΩ 〃	〃	R467～476,493			
	HL 81 66 80	Metal Oxide Resistor	6.8kΩ 1P	酸金抵抗	R715			⚠
	HV 45 34 70	Flame Proof Carbon Resistor	4.7Ω	不熱化カーボン抵抗	R703,704			⚠
	HV 45 52 20	〃	220Ω	〃	R716			⚠
※	HX 60 05 10	〃	150Ω 1/2W	〃	R707,717～719			⚠
※	HX 60 05 20	〃	220Ω 1/2W	〃	R720			⚠
※	GX 60 01 20	Coil	33mH	コイル	L101,201			
※	HX 60 04 80	Pre-Set Potentiometer	B100K	半固定抵抗	VR104			
※	HX 60 04 90	Slide Volume	A50K	スライドボリウム	VR103			
※	HX 60 05 00	〃	C50K×2	〃	VR101,102			
※	KX 60 03 50	Push Switch		プッシュスイッチ	SW101 TAPE1			
※	KX 60 03 60	〃		〃	SW102 TAPE2			
※	KX 60 03 70	〃		〃	SW103,104 EQ			
※	KX 60 03 20	〃		〃	SW105 FILTER	GE-40		
※	KX 60 03 80	〃		〃	SW106,107			
※	KX 60 03 90	〃		〃	SW108～110			
※	KX 60 03 30	〃		〃	SW801 POWER	GE-40		⚠
※	LX 60 01 50	Phone Jack	M1669-ABAA	ホーンジャック	JK104			
※	LX 60 01 40	Pin Jack	4P	ピンジャック	JK101～103	GE-40		
※	KX 60 04 00	Fuse	630mA 250V	ヒューズ	F701,702		U,C,R,A,J	⚠
	KB 00 06 70	〃	T630mA 250V	〃	〃		G,K	⚠
	LA 00 23 20	Lapping Terminal	P=7.5 3P	ラッピング端子台				
	LA 00 21 40	〃	P=10 2P	〃				
	LB 20 18 80	Fuse Holder		ヒューズホルダー				
	BA 08 40 00	Heat Sink		放熱板		K-1000		
※	iX 60 42 80	Display Unit		表示管				
※	XX 64 98 00	Holder, Display		表示管ホルダー				
※	XX 64 95 90	Capacitor Cover		コンデンサーカバー		GE-40		
	Ei 03 00 66	Binding Head Tapping Screw	3×6 ZMC2-Y	バインドタッピングネジ	PACK			

※New Parts（新規部品）

EXPLODED VIEW

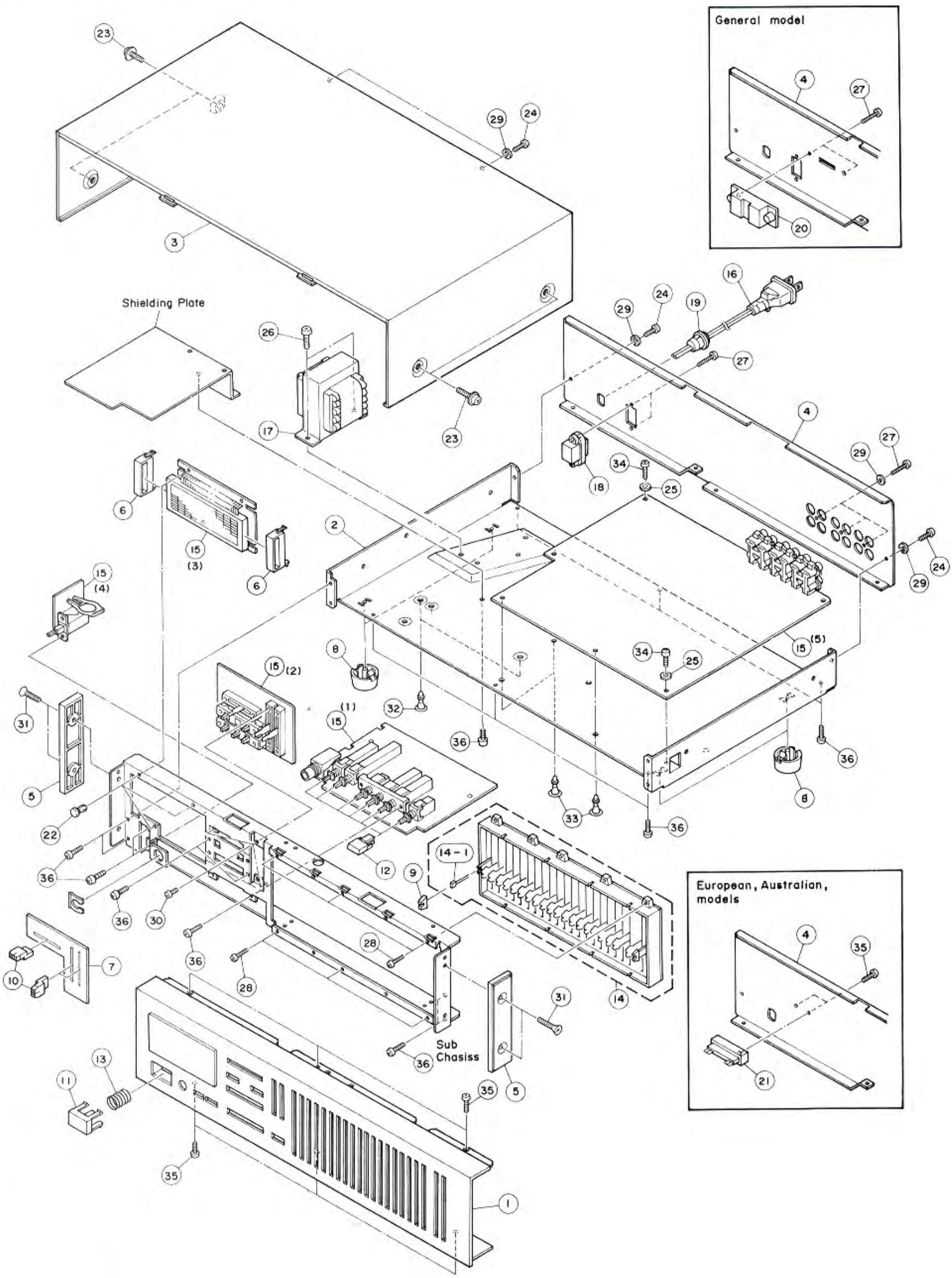

■ MECHANISM PARTS

	Ref. No.	Part No.	Description		部品名	Remarks	Common Model	Markets	ランク
※	1	XX 64 97 30	Front Panel Unit		フロントパネルユニット	Silver			
※	〃	XX 64 97 40	〃		〃	Black			
※	2	XX 64 94 50	Main Chassis		メインシャーシー		GE-40		
※	3	XX 64 94 60	Top Cover		トップカバー	Silver	GE-40		
※	〃	XX 64 94 70	〃		〃	Black	GE-40		
※	4	XX 64 97 50	Rear Panel		リアパネル			J	
※	〃	XX 64 97 60	〃		〃			U,C	
※	〃	XX 64 97 70	〃		〃			G	
※	〃	XX 64 97 80	〃		〃			R	
※	〃	XX 64 97 90	〃		〃			A,K	
※	5	XX 64 95 30	Side Plate		サイドプレート	Silver	GE-40		
※	〃	XX 64 95 40	〃		〃	Black	GE-40		
※	6	XX 64 98 00	Holder		表示管ホルダー				
※	7	XX 64 95 50	Blind		ブラインド		GE-40		
※	8	XX 64 95 60	Leg		脚		GE-40		
※	9	CB 64 11 10	Knob,Slide		スライドツマミ	EQUALIZER Silver	GE-40		
※	〃	CB 64 11 20	〃		〃	〃 Black	GE-40		
	10	CB 60 83 70	〃		〃	SUBSONIC FILTER Silver			
	〃	CB 61 67 30	〃		〃	〃 Black			
	11	CB 63 51 00	Button		ボタン	POWER Silver			
	〃	CB 63 51 10	〃		〃	〃 Black			
	12	CB 63 42 20	Push Button		プッシュボタン	TAPE EQUALIZER SUBSONIC FILTER Silver			
	〃	CB 63 42 30	〃		〃	〃 Black			
	13	AA 62 20 80	Spring		スプリング				
※	14	HX 60 04 60	Slide Volume Unit		スライドボリュームユニット		GE-40		
※	14-1	iX 60 23 10	LED	GL-9PR3	LED				
※	15	XX 64 97 10	Main Circuit Board		メインシート			U,C,R,A,J	
※	〃	XX 64 97 20	〃		〃			G,K	
	16	MG 00 17 60	Power Cord	7A 125V	電源コード		GE-40	J	
	〃	MG 00 09 80	〃	10A 125V	〃		GE-40	U	
	〃	MG 00 22 20	〃	10A 125V	〃		GE-40	C	
	〃	MG 00 09 60	〃	2.5A 250V	〃		GE-40	G	
	〃	MG 00 07 80	〃	6A 250V	〃		GE-40	R	
	〃	MG 00 09 20	〃	7.5A 250V	〃		GE-40	A	
	〃	MG 00 18 60	〃	2.5A 250V	〃		GE-40	K	
※	17	GX 60 00 70	Power Transformer		電源トランス	GE-14407A		J	
※	〃	GX 60 00 80	〃		〃	〃 C		U,C	
※	〃	GX 60 00 90	〃		〃	〃 E		G	
※	〃	GX 60 01 00	〃		〃	〃 D		R	
※	〃	GX 60 01 10	〃		〃	〃 B		A,K	
※	18	LX 60 01 20	AC Outlet		ACアウトレット		GE-40	J,U,R	
※	〃	LX 60 01 30	〃		〃		GE-40	C	
	19	CB 61 68 10	Stopper,Power Cord	CM-22A	コードストッパー			J,U,C	
	〃	CB 62 01 90	〃	CM-22B	〃			G,R,A,K	
	20	KX 60 01 20	Voltage Selector		電圧切換器		GE-5,GE-40	R	
	21	LA 00 29 50	Terminal Board	2P	中継端子台			G,A,K	
※	22	XX 64 98 10	Plastic Rivet		プラスチックリベット				
	23	EK 13 50 20	BW Head Tapping Screw	4×8 FNM3-3g	BWヘッドタッピングネジ	Silver			
	〃	EK 96 60 70	〃	4×8 ZMC2-BI	〃	Black			
	24	Ei 33 00 66	Binding Head Tapping Screw	3×6 FCRM3-BI	バインドタッピングネジ	PACK			
	25	EV 20 00 36	Plain Washer	φ3 ZMC2-Y	平座金	PACK			
	26	ED 04 00 86	Bind Head Screw	4×8 ZMC2-Y	バインド小ネジ	PACK			
	27	Ei 33 01 06	Binding Head Tapping Screw	3×10 ZMC2-BI	バインドタッピングネジ	PACK			

※New Parts（新規部品）

	Ref. No.	Part No.	Description		部品名	Remarks	Common Model	Markets	ランク
	28	Ei 02 60 66	Binding Head Tapping Screw	2.6×6 ZMC2-Y	バインドタッピングネジ	PACK			
	29	EV 41 30 36	Toothed Lock Washer	φ3 FCRM3-BI	歯付座金	PACK			
	30	EA 02 00 30	Pan Head Screw	2×3 ZMC2-Y	ナベ小ネジ				
※	31	EB 24 01 06	Flat Head Screw	4×10 FCRM3-3g	皿小ネジ	Silver PACK			
	〃	EB 34 01 00	〃	4×10 FCRM3-BI	〃	Black			
※	32	XX 64 95 70	Spacer		ロッキングカードスペーサー		GE-40		
※	33	XX 64 95 80	〃		〃		GE-40		
		CB 06 92 50	Binding Tie	BK-1	インシュロックタイ				
	34	EJ 03 00 86	Pan Head Tapping Screw	3×8 ZMC2-Y	ナベタッピングネジ	PACK			
	35	ED 33 00 66	Bind Head Screw	3×6 FCRM3-BI	バインド小ネジ	PACK			
	36	ED 03 00 66	〃	3×6 ZMC2-Y	〃	PACK			
			Accessories		付属品				
		Mi 06 62 10	Pin Cord		ピンコード				
※		XX 64 98 20	Mic Ass'y	MM-60	マイクロホンAss'y				

※New Parts（新規部品）

YAMAHA TECHNICAL BULLETIN
ELECTRONICS CORPORATION, USA
6660 ORANGETHORPE AVENUE BUENA PARK, CALIFORNIA 90620 MAIL ADDRESS: P.O. BOX 6660, BUENA PARK, CALIFORNIA 90622 PHONE: 1-800-4-YAMAHA

Effective Date: 3/15/86 No. 65H

MODEL: GE-60

SERIAL NUMBERS AFFECTED: 103100 and below

FUNCTION AFFECTED: Switch Button

TYPE OF CHANGE

MANDATORY	OPTIONAL	FOR INFO ONLY
☐	☒	☐

COMPLAINT: Left, right and microphone switches release intermittently or not at all.

CAUSE: After pushing button, the locking arm allows the button to slip over the switch and the switch mechanism will not release.

SOLUTION: Install a spacer (part #CB634220-Sp) between the switches and the button as shown below.

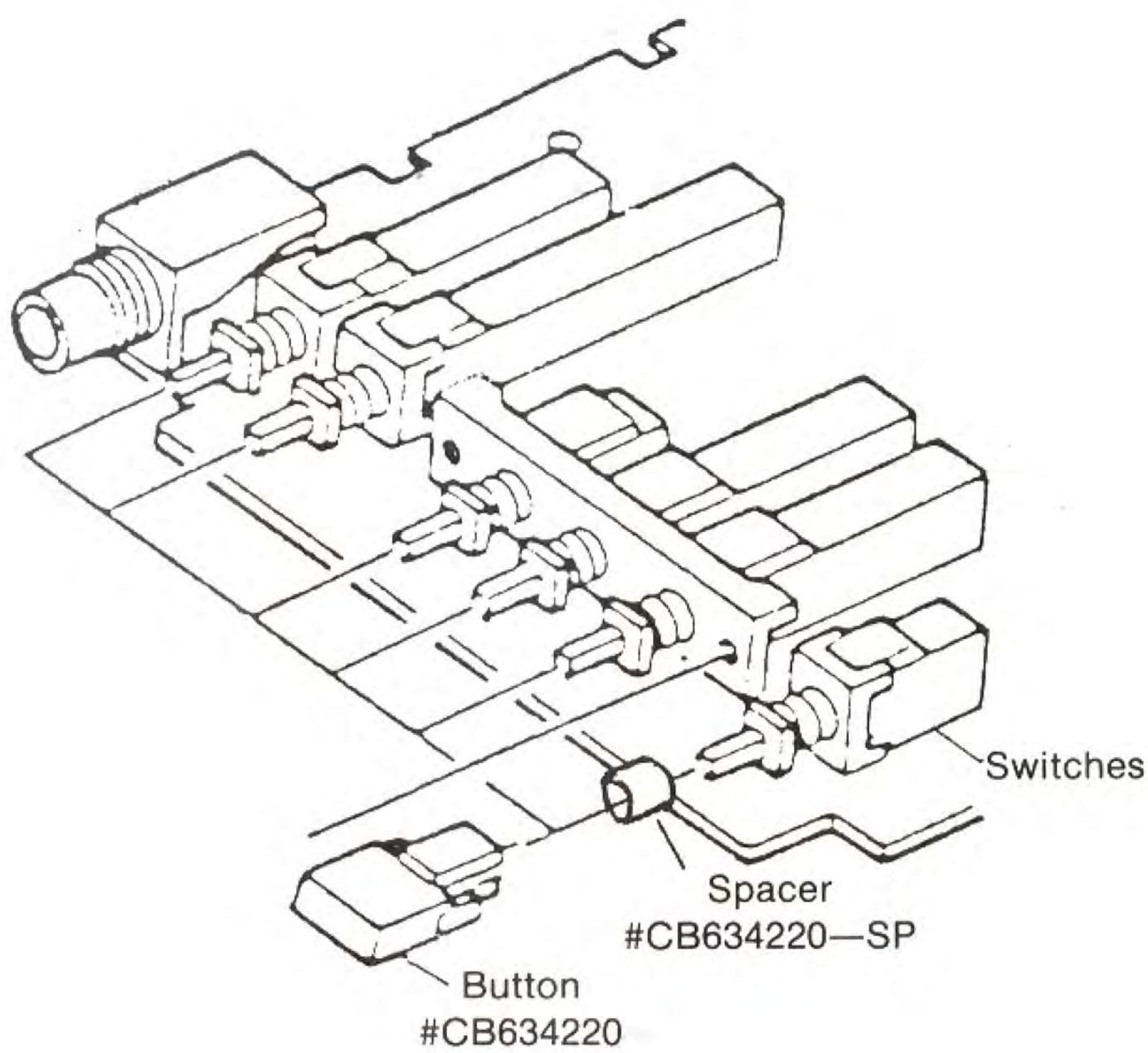

cc: NGK