AV RECEIVER

RX-V1000/RX-V1000RDS

SERVICE MANUAL

IMPORTANT NOTICE

This manual has been provided for the use of authorized YAMAHA Retailers and their service personnel.
It has been assumed that basic service procedures inherent to the industry, and more specifically YAMAHA Products, are already known and understood by the users, and have therefore not been restated.

WARNING: Failure to follow appropriate service and safety procedures when servicing this product may result in personal injury, destruction of expensive components, and failure of the product to perform as specified. For these reasons, we advise all YAMAHA product owners that any service required should be performed by an authorized YAMAHA Retailer or the appointed service representative.

IMPORTANT: The presentation or sale of this manual to any individual or firm does not constitute authorization, certification or recognition of any applicable technical capabilities, or establish a principle-agent relationship of any form.

The data provided is believed to be accurate and applicable to the unit(s) indicated on the cover. The research, engineering, and service departments of YAMAHA are continually striving to improve YAMAHA products. Modifications are, therefore, inevitable and specifications are subject to change without notice or obligation to retrofit. Should any discrepancy appear to exist, please contact the distributor's Service Division.

WARNING: Static discharges can destroy expensive components. Discharge any static electricity your body may have accumulated by grounding yourself to the ground buss in the unit (heavy gauge black wires connect to this buss).

IMPORTANT: Turn the unit OFF during disassembly and part replacement. Recheck all work before you apply power to the unit.

■ CONTENTS

TO SERVICE PERSONNEL 1
IMPEDANCE SELECTOR 1
SPECIFICATIONS 2
REMOTE CONTROL TRANSMITTER 3
FRONT PANELS 4
REAR PANELS ..... 5~6
INTERNAL VIEW 7
DISASSEMBLY PROCEDURES 8
SELF DIAGNOSIS FUNCTION (DIAG) ..... 9~25
AMP ADJUSTMENT 25
DISPLAY DATA 26
IC DATA ..... 27~33
BLOCK DIAGRAM ..... 34~37
PRINTED CIRCUIT BOARD ..... 38~61
PIN CONNECTION DIAGRAM ..... 62~63
SCHEMATIC DIAGRAM ..... 64~70
PARTS LIST ..... 71~91
REMOTE CONTROL TRANSMITTER ..... 92~93

このサービスマニュアルは、エコマーク認定の再生紙を使用しています。
This Service Manual uses recycled paper.

100730

YAMAHA
YAMAHA CORPORATION
P.O.Box 1, Hamamatsu, Japan

■ TO SERVICE PERSONNEL

1. Critical Components Information
   Components having special characteristics are marked ⚠ and must be replaced with parts having specifications equal to those originally installed.
2. Leakage Current Measurement (For 120V Models Only)
   When service has been completed, it is imperative to verify that all exposed conductive surfaces are properly insulated from supply circuits.

- Meter impedance should be equivalent to 1500 ohm shunted by 0.15µF.
- Leakage current must not exceed 0.5mA.
- Be sure to test for leakage with the AC plug in both polarities.

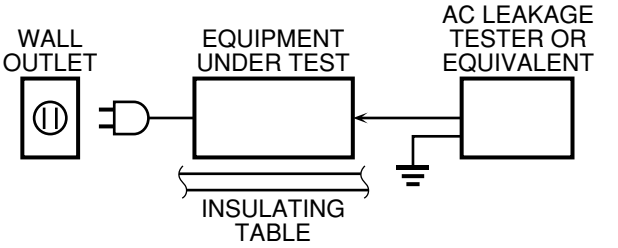

WARNING: CHEMICAL CONTENT NOTICE!

The solder used in the production of this product contains LEAD. In addition, other electrical/electronic and /or plastic (where applicable) components may also contain traces of chemicals found by the California Health and Welfare Agency (and possibly other entities) to cause cancer and/or birth defects or other reproductive harm.

DO NOT PLACE SOLDER, ELECTRICAL/ELECTRONIC OR PLASTIC COMPONENTS IN YOUR MOUTH FOR ANY REASON WHATSOEVER!

Avoid prolonged, unprotected contact between solder and your skin! When soldering, do not inhale solder fumes or expose eyes to solder/flux vapor!

If you come in contact with solder or components located inside the enclosure of this product, wash your hands before handling food.

■ IMPEDANCE SELECTOR

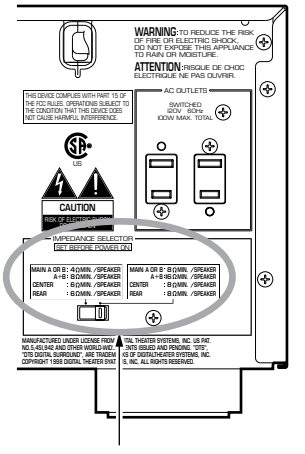

IMPEDANCE SELECTOR

WARNING:
Do not change the IMPEDANCE SELECTOR switch setting while the power to this unit is on, otherwise this unit may be damaged.

■ SPECIFICATIONS

■ Audio Section

Minimum RMS Output Power (Power Amp. Section)
(20 Hz to 20 kHz, 0.04% THD, 8 ohms)
MAIN ..... 100W + 100W
CENTER 100W
REAR ..... 100W + 100W

Maximum Power (EIAJ) [R, T models]
(1 kHz, 10% THD, 8 ohms)
MAIN ..... 140W + 140W
CENTER 140W
REAR ..... 140W + 140W

Dynamic Power Per Channel (IHF)
MAIN L/R (8/6/4/2 ohms)
[U model] ..... 135/170/205/245 W
[C, A, B, G, L, R, T models] ..... 125/160/195/230 W

DIN Standard Output Power Per Channel
(1 kHz, 0.7% THD, 4 ohms)
[G model] ..... 140 W

Dynamic Headroom
8 ohms
[U model] ..... 1.3 dB
[C model] ..... 1.0 dB

IEC Power
MAIN L/R (1 kHz, 0.04% THD, 8 ohms)
[G model] ..... 105W + 105W

Damping Factor
MAIN L/R (20 Hz to 20 kHz, 8 ohms) ..... 80 or more

Input Sensitivity / Input Impedance
PHONO MM ..... 2.5 mV / 47 k-ohms
CD, etc. ..... 150 mV / 47 k-ohms

Maximum Input Signal Level
PHONO MM (1 kHz, 0.1% THD) ..... 100 mV
CD, etc. (1 kHz, 0.5% THD, Effect On) ..... 2.2 V

Output Level / Output Impedance
REC OUT ..... 150 mV / 0.9 k-ohms
PRE OUT ..... 2.57 V / 1.2 k-ohms
SUB WOOFER [MAIN SP: Small] ..... 4 V/1.2 k-ohms

Headphone Jack Rated Output / Impedance
1 kHz, 40 mV, 8 ohms ..... 0.15 V / 100 ohms

Frequency Response
Power Amp. section (5 Hz to 100 kHz) ..... 0/-3 dB
CD, etc. to MAIN SP OUT (10 Hz to 100 kHz) ..... 0/-3 dB

RIAA Equalization Deviation
PHONO MM (20 Hz to 20 kHz) ..... 0 ± 0.5 dB

Total Harmonic Distortion
(20 Hz to 20 kHz)
PHONO MM, to REC OUT (1V) ..... 0.02% or less
CD, etc. to MAIN SP OUT (50 W / 8 ohms) ..... 0.04% or less

Signal to Noise Ratio (IHF-A network)
CD, etc. to MAIN SP OUT (Input shorted, Effect Off)
150 mV ..... 96 dB or more
250 mV ..... 100 dB or more

Residual Noise (IHF-A network)
MAIN L/R SP OUT ..... 150 µV or less

Channel Separation
(Vol -30 dB, Effect Off)
PHONO (Input Shorted, 1 kHz) ..... 60 dB or more
PHONO (Input Shorted, 10 kHz) ..... 55 dB or more
CD, etc. (Input 5.1 k-ohms terminated, 1 kHz) ..... 60 dB or more
CD, etc. (Input 5.1 k-ohms terminated, 10 kHz) ..... 45 dB or more

Tone Control Characteristics
Bass: Boost/Cut ..... ±10 dB (50 Hz)
Turnover Frequency ..... 350 Hz
Treble: Boost/Cut ..... ±10 dB (20 kHz)
Turnover Frequency ..... 3.5 kHz

Filter Characteristics
MAIN, Rear SP Small (H.P.F.) ..... 90 Hz, 12 dB/oct.
SUBWOOFER (L.P.F.) ..... 90 Hz, 18 dB/oct.

Bass Extension
60 Hz ..... 6 dB

■ Video Section

Video Signal Type
[U, C, R, T models] ..... NTSC
[A, B, G, L, R, T models] ..... PAL

Video Signal Level
..... 1 Vp-p / 75 ohms

S-Video Signal Level
Y ..... 1 Vp-p / 75 ohms
C ..... 0.286 Vp-p / 75 ohms

Component Video Signal Level
Y ..... 1 Vp-p / 75 ohms
Cb / Cr ..... 0.7 Vp-p / 75 ohms

Maximum Input Level
..... 1.5 Vp-p

Signal to Noise Ratio
..... 50 dB or more

Monitor Out Frequency Response
S-Video Signal Level ..... 5 Hz to 10 MHz, -3 dB
Component Signal Level ..... DC to 30 MHz, -3 dB

■ FM Section

Tuning Range
[U, C models] ..... 87.5 to 107.9 MHz
[R, T, A, B, G, L models] ..... 87.5 to 108.0 MHz

50 dB Quieting Sensitivity (IHF)
(100% Mod)
Mono ..... 2.0 µV (17.3 dBf)
Stereo ..... 25 µV (39.2 dBf)

Usable Sensitivity (IHF)
Mono ..... 1.0 µV (11.2 dBf)

Selectivity
at 400 kHz ..... 70 dB

Signal to Noise Ratio (IHF)
Mono / Stereo ..... 76 dB / 70 dB

Harmonic Distortion
(1 kHz)
Mono/Stereo ..... 0.2 / 0.3 %

Stereo Separation
1 kHz ..... 45 dB

Frequency Response
20 Hz to 15 kHz ..... +0.5 / -2 dB

Antenna Input
..... 75 ohms unbalanced

■ AM Section

Tuning Range
[U, C, R, T models] ..... 530 to 1,710 kHz
[A, B, G, L models] ..... 531 to 1,611 kHz

Usable Sensitivity
..... 300 µV/m

Antenna
..... Loop Antenna

■ General

Power Supply
[U, C models] ..... AC 120 V, 60 Hz
[R models] ..... AC 110/120/220/240 V, 50/60 Hz
[T model] ..... AC 220 V, 50 Hz
[A model] ..... AC 240 V, 50 Hz
[B, G, L models] ..... AC 230 V, 50 Hz

Power Consumption
[U model] ..... 320 W
[C model] ..... 300 W / 360 VA
[R, T, A, B, G, L models] ..... 300 W

Standby Power Consumption
[U, C, A, B, G, L models] ..... 1.2 W
[R, T models] ..... AC 220 V/50 Hz, 1.5 W

Maximum Power Consumption
(5ch Drive, 10% THD)
[R model] ..... 585 W

AC Outlets
2 switched outlets
[U, C, R, T G, L models] ..... 100W max., total
1 switched outlets
[A, B models] ..... 100W max.

Dimensions (W x H x D)
..... 435 x 171 x 431.5 mm (17-1/8" x 6-3/4" x 17")

Weight
..... 15.0 kg (33 lbs. 1 oz.)

Finish
[U, C, R, T, A, B, G, L models] ..... Black color
[C, R, T, B, G, L models] ..... Gold color

Accessories
Remote control transmitter, Manganese batteries, Indoor FM antenna, AM loop antenna, Antenna Adapter

* Specifications are subject to change without notice.

U ..... U.S.A. model
A ..... Australian model
G ..... European model
R ..... General model
C ..... Canadian model
B ..... British model
L ..... Singapore model
T ..... China model

• **DIMENSIONS**

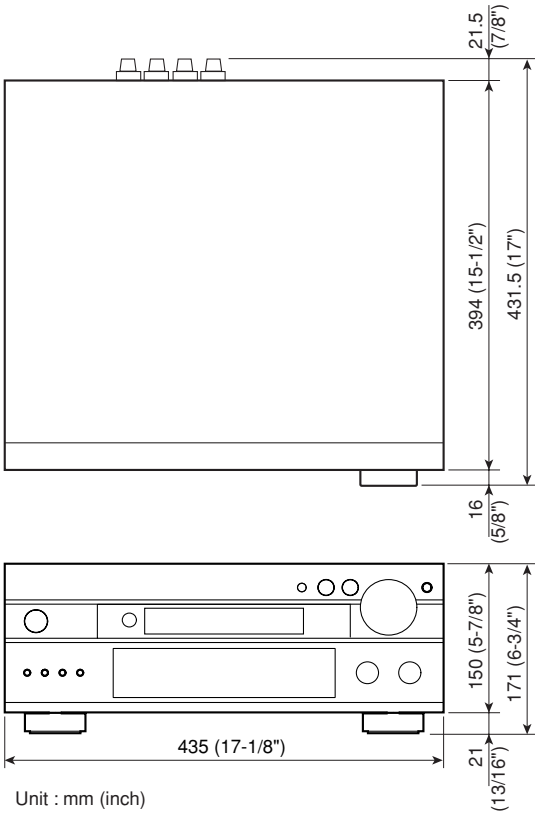

Unit : mm (inch)

■ REMOTE CONTROL TRANSMITTER

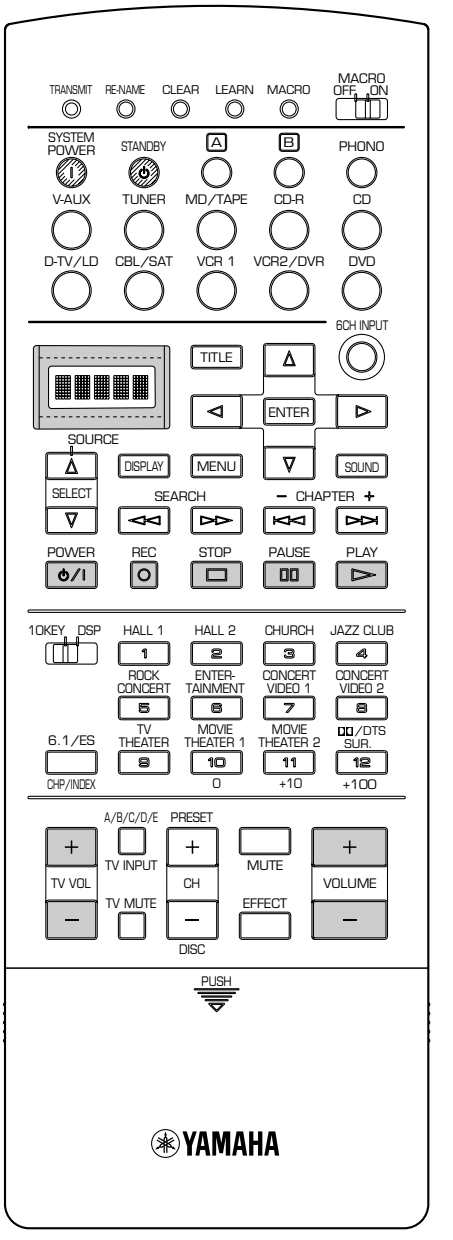

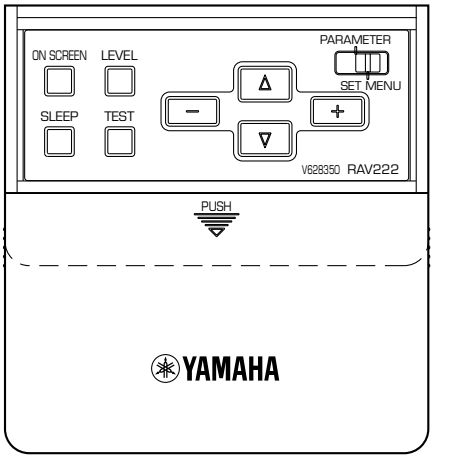

■ FRONT PANELS

RX-V1000 (U, C, A, L, R, T models)

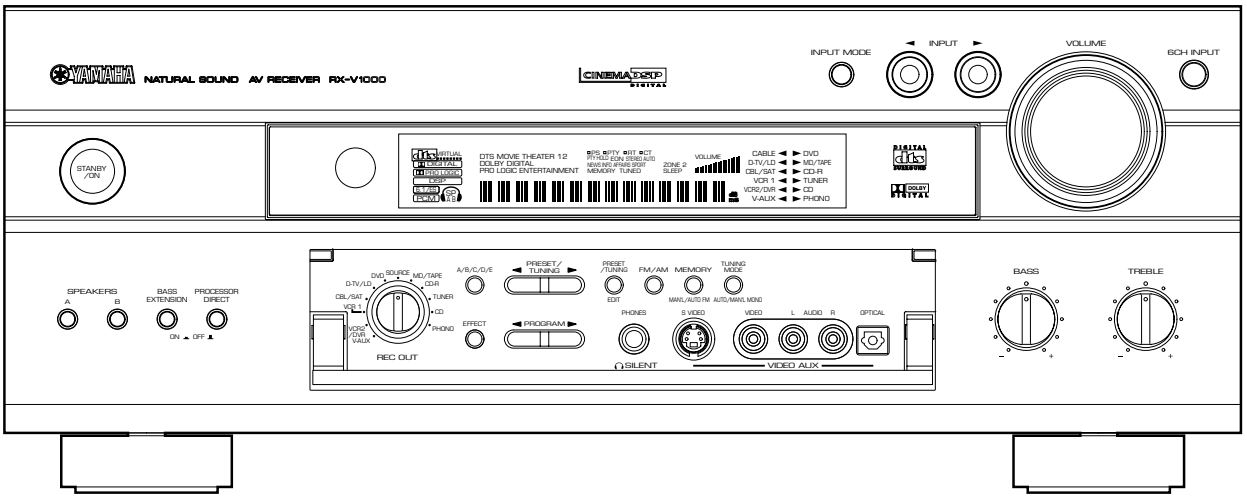

RX-V1000RDS (B, G models)

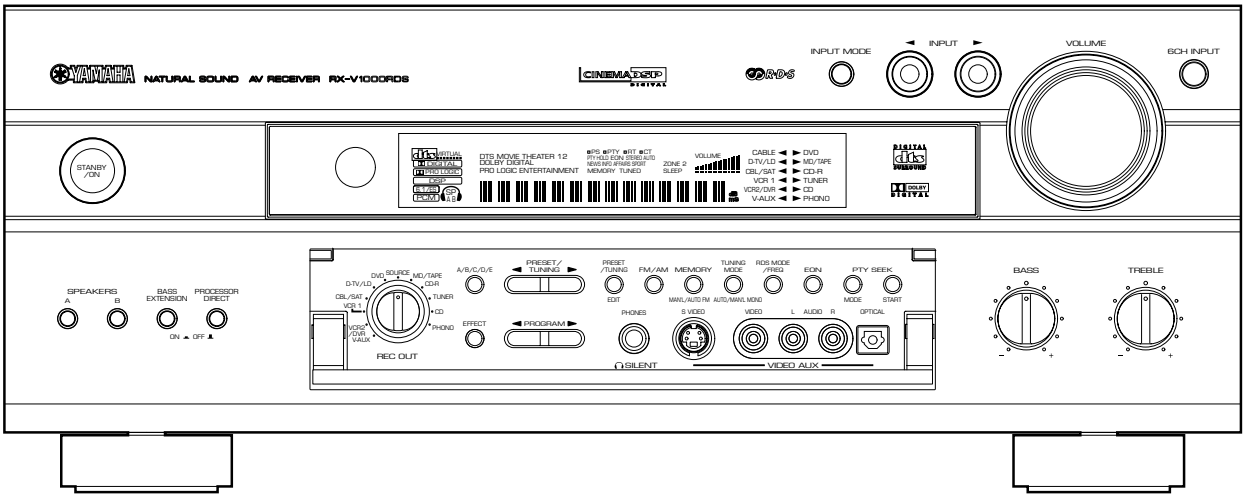

■ REAR PANELS

U model

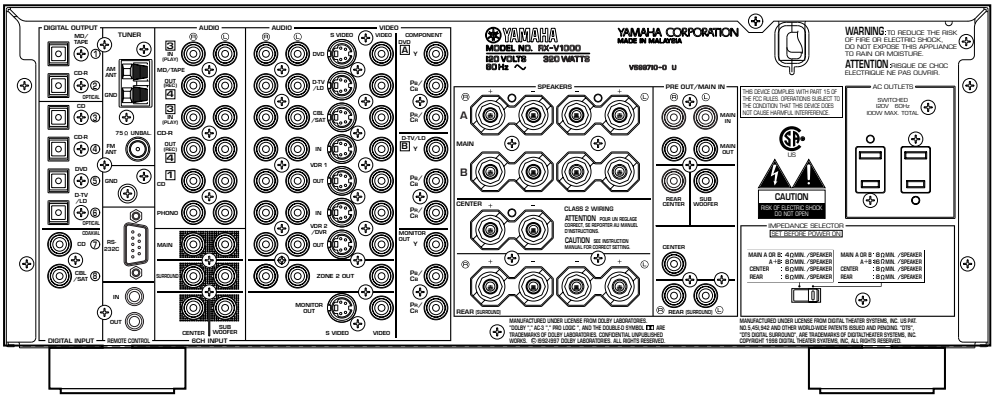

C model

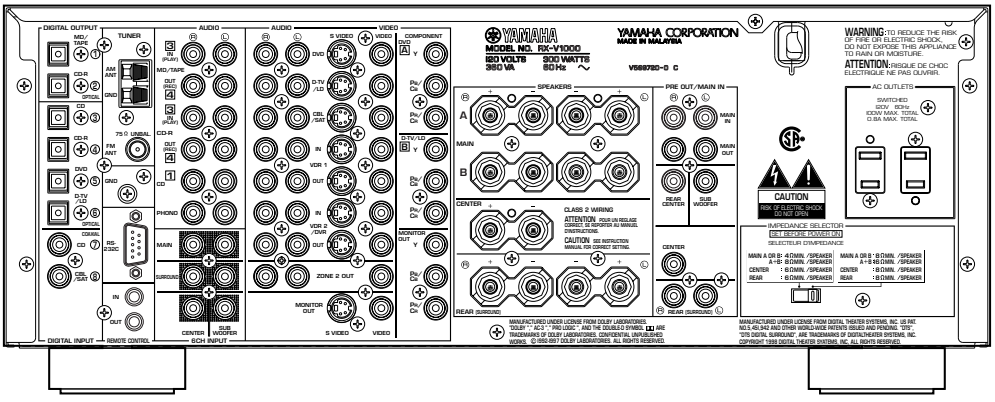

A model

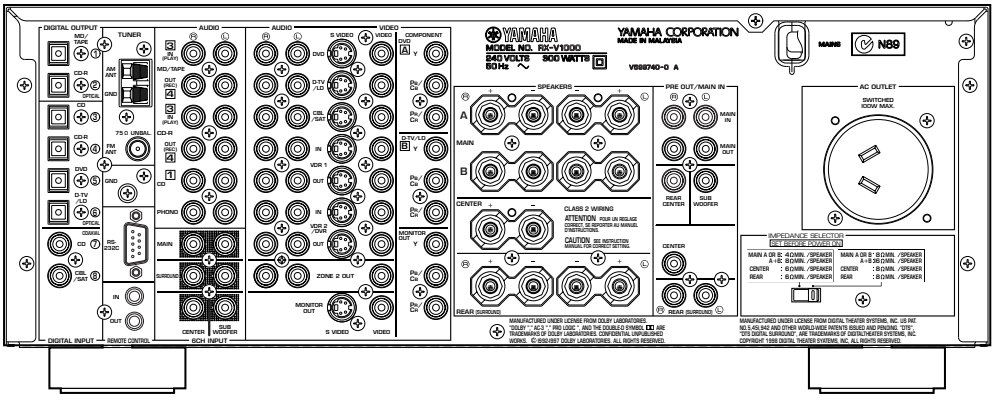

B model

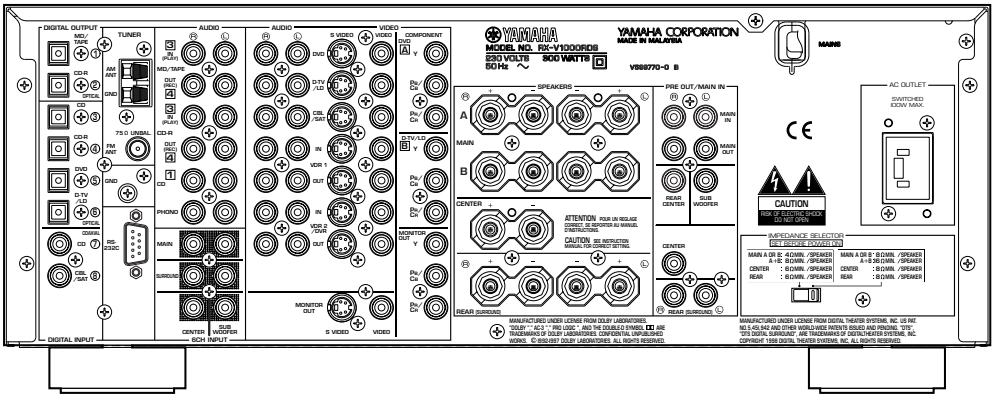

G model

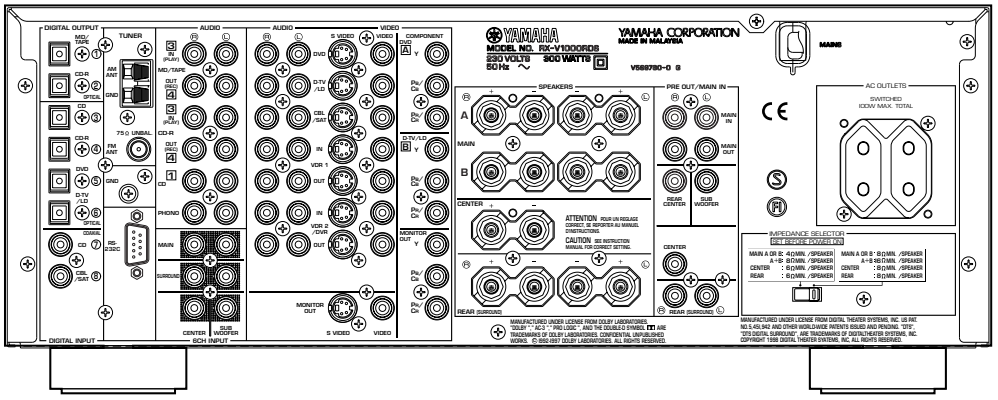

L model

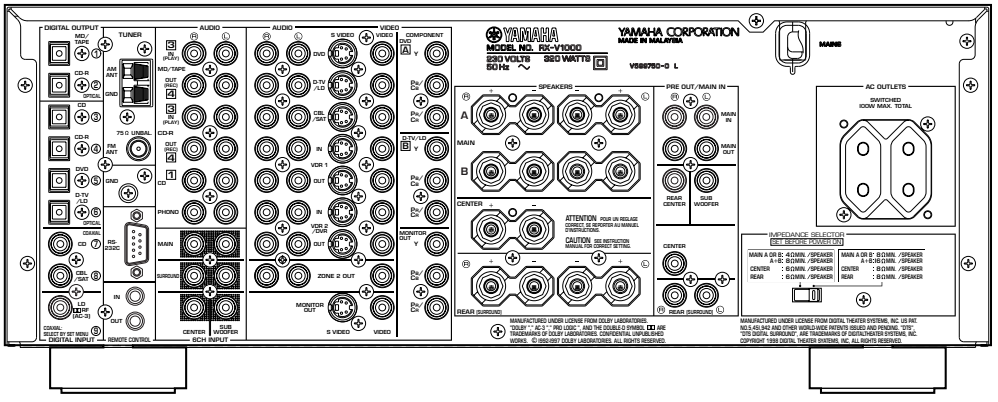

R, T model

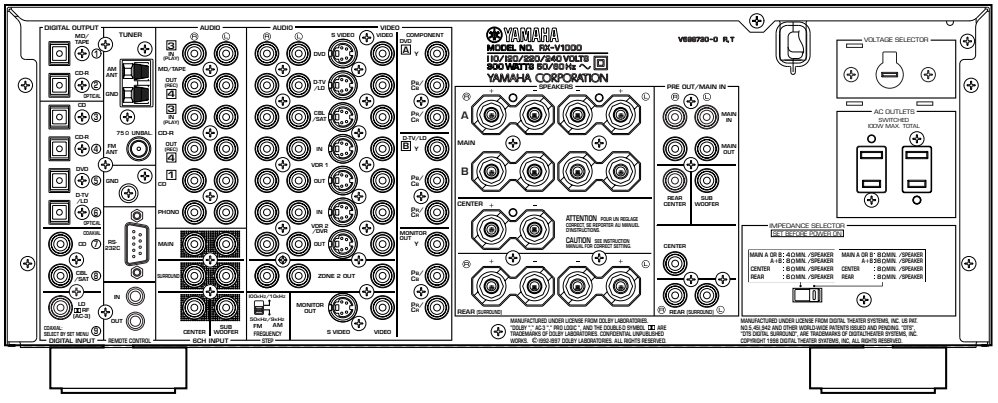

■ INTERNAL VIEW

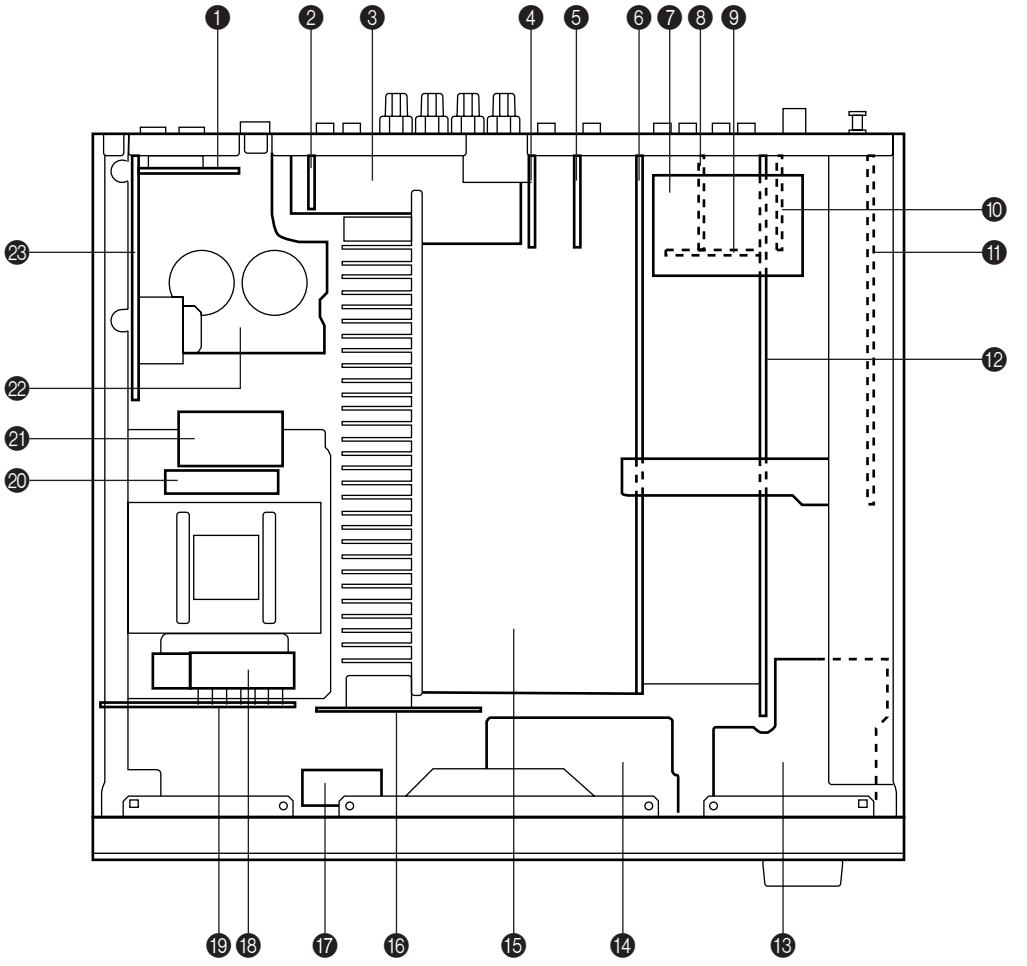

❶ POWER (3) P.C.B.
❷ MAIN (5) P.C.B.
❸ MAIN (2) P.C.B.
❹ VIDEO (3) P.C.B.
❺ VIDEO (2) P.C.B.
❻ VIDEO (1) P.C.B.
❼ POWER (7) P.C.B.
❽ POWER (8) P.C.B.
❾ POWER (9) P.C.B.
❿ VIDEO (4) P.C.B.
⓫ DSP P.C.B.
⓬ FUNCTION P.C.B.
⓭ OPERATION (5) P.C.B.
⓮ OPERATION (4) P.C.B.
⓯ MAIN (1) P.C.B.
⓰ POWER (6) P.C.B.
⓱ OPERATION (6) P.C.B.
⓲ POWER (5) P.C.B.
⓳ POWER (4) P.C.B.
⓴ POWER (2) P.C.B.
㉑ MAIN (4) P.C.B.
㉒ MAIN (3) P.C.B.
㉓ POWER (1) P.C.B.

■ DISASSEMBLY PROCEDURES

(Remove parts in the order as numbered.)
Disconnect the power cord from the AC outlet.

1. Removal of Top Cover

a. Remove 2 screws (①), 4 screws (②) and 5 screws (③) in Fig. 1.
b. Slide the Top Cover rearward to remove it.

2. Removal of Front Panel

Remove 9 screws (④) in Fig. 1, and the Front Panel can be removed forward.

3. Removal of MAIN PCB (1)

a. Remove the Top Cover.
b. Remove 2 screws (⑤) in Fig. 3 AND remove the support metal plate.
c. Disconnect 3 connectors (CB232, CB601, CB602 in Fig.2) from the VIDEO PCB (1), and disconnect the connector (CB3) from the MAIN PCB (1) in Fig. 2.
d. Remove 8 screws (⑥) in Fig. 3, and the VIDEO PCB (1) and VIDEO PCB (3) can be removed.
e. Disconnect the connector (CB353) from the POWER PCB (6) in Fig. 2.
f. Remove the plastic rivet ⑦, and the POWER PCB (6) can be removed upward from the heat sink.
g. Disconnect the connector (CB1 in Fig. 2) from the MAIN PCB (1) .
h. Remove 2 screws (⑧) in Fig. 2, and the support Transistor can be removed.
i. Remove 6 screws (⑨) in Fig. 2.
j. Remove 6 screws (⑩) in Fig. 3.
k. Pull out the MAIN PCB (1) forward as shown in Fig. 3. At this time, disconnect the flexible flat cable connected to the MAIN PCB (1) if necessary.

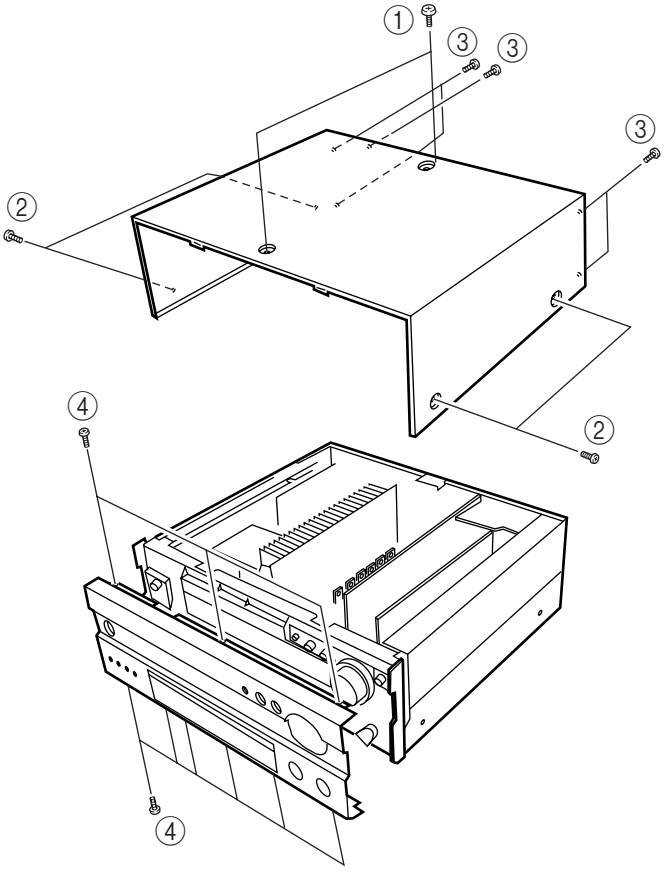

Fig. 1

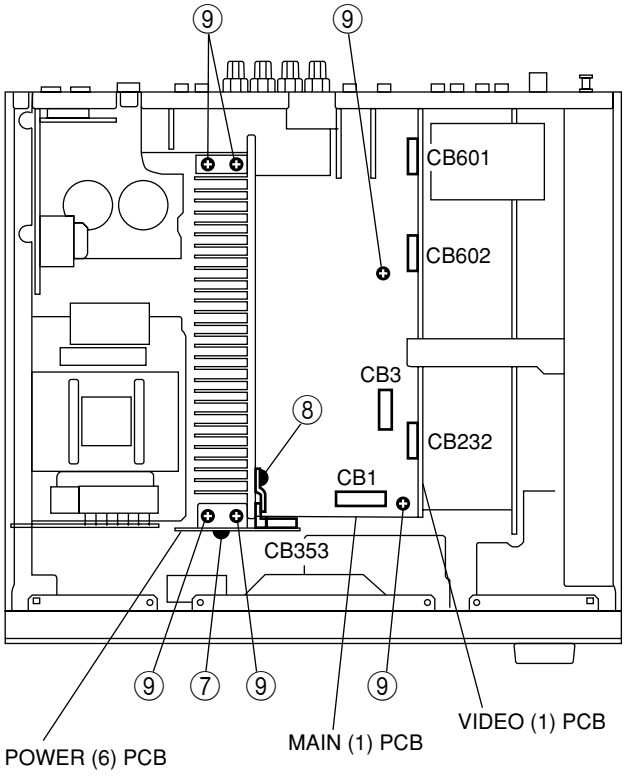

Fig. 2

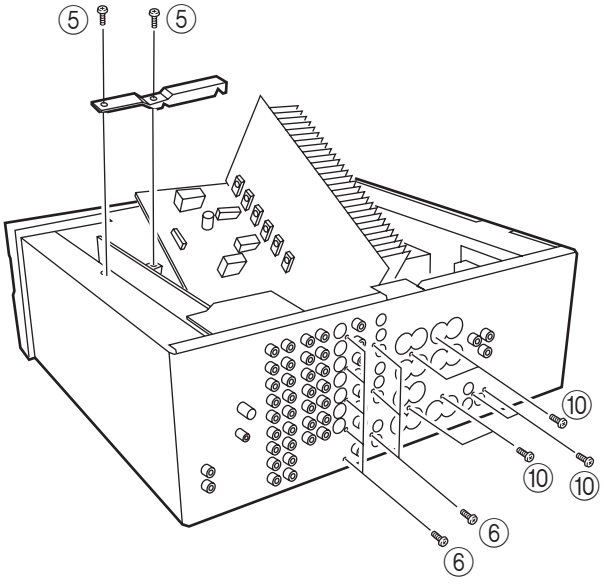

Fig. 3

■ SELF DIAGNOSIS FUNCTION (DIAG)

There are 13 DIAG menu items each of which has sub-menu items. Listed in the table below are menu items and sub-menu items. (Menu operation of DIAG is executed by using the main unit and its remote control unit.)

For the setting procedure of the tape, please refer to "Setting the Manufacturer Code" (RX-V1000; p.54, RX-V1000RDS: p.57) of the Instruction Manual.

No.	DIAG menu	sub-menu	Remote control code (key)
1	DSP THROUGH 1.ANALOG BYPAS	1. ANALOG BYPAS (ANALOG BYPASS)	7A-90 (PRG 9)
		2. DSP 0dB	7A-91 (PRG 10)
		3. DSP FULL BIT	7A-92 (PRG 11)
2	HP ROUTE 2.HP 0dB	1. HP 0dB	7A-93 (PRG 12)
		2. HP FULL BIT	7A-10 (PRESET+)
3	RAM THROUGH 3.RAM 0dB	1. RAM 0dB	7A-11 (PRESET-)
		2. MAIN ATT	7A-12 (PAGE)
4	PRO LOGIC 4. PRO LOGIC	1. YSS928	7A-0C (CD FF)
5	SPEAKERS SET 5.MAIN:SML 0dB	1. MAIN:SML 0dB (MAIN:SMALL 0dB)	7A-88 (PRG 1)
		2. MAIN:LRG -10dB (MAIN:LARGE -10dB)	7A-89 (PRG 2)
		3. CENTER:NONE	7A-8A (PRG 3)
		4. LFE/B:MAIN (LFE/BASS:MAIN)	7A-8B (PRG 4)
		5. Front Mix:5ch	7A-8C (PRG 5)
6	DISPLAY CHECK 6. VFD CHECK	1. VFD CHECK (initial screen)	7A-8F (PRG 8)
		2. VFD DISP OFF (All segments OFF)	–
		3. VFD DISP ALL (All segments ON 100%)	–
		4. VFD DIMMER (All segments ON 50%)	–
		5. CHECKED PATTERN (ON in lattice)	–
7	MANUAL TEST 7. TEST ALL	1. ALL	7A-00 (TP PLAY)
		2. MAIN L	7A-01 (TP RW)
		3. CENTER	7A-02 (TP FW)
		4. MAIN R	7A-03 (TP STOP)
		5. REAR R	7A-04 (TP PAUSE)
		6. REAR C	7A-05 (TP MUTE)
		7. REAR L	7A-06 (TP A/B)
		8. LFE	7A-09 (CD STOP)
8	RS-232C 8.TxRx DATA:XX	1. TxRx DATA (unused)	–
		2. HARD FLOW (unused)	–
9	PRESET 9.PRESET INHI	1. PRESET INHIBIT (memory initialization inhibited)	–
		2. PRESET RESERVED (memory initialized)	7A-57 (SLEEP)
10	AD DATA CHECK REC-OUT:085	1. REC-OUT (unused)	–
		2. K0/K1 (panel key)	–
		3. DC/PS (protection)	7A-0B (CD SKIP-)
11	IF STATUS IST:4403070500	1. IST (internal status)	–
		2. CS1 (channel status 1)	–
		3. CS2 (channel status 2)	–
		4. CS3 (channel status 3)	–
		5. CS4 (channel status 4)	–
		6. CS5 (channel status 5)	–
		7. BI1 (BSI-DD 1)	–
		8. BI2 (BSI-DD 2)	–
		9. BI3 (BSI-DD 3)	–
		10. BI4 (BSI-DD 4)	–
		11. BS1 (BSI-DTS 1)	–
		12. BS2 (BSI-DTS 2)	–
		13. BS3 (BSI-DTS 3)	–
		14. BS4 (BSI-DTS 4)	–
		15. YS1 (YSS-928-1)	–
		16. YS2 (YSS-928-2)	–
		17. YS3 (YSS-928-3)	–
12	DSP RAM CHECK Bus Check:NoEr	Bus Check	7A-0A (CD SKIP+)
13	VERSION/CHECK SUM/PORT VER. XXXXXXXX	1. VER. (Version information)	7A-0D (CD REW)
		2. A/P (Checksum ALL/PROG)	–
		3. 2/M (Checksum 232C/MAKER)	–
		4. PORT (Port check)	–

• Starting DIAG

Press the “STANDBY/ON key while pressing those two keys indicated in the figure on the right.

• Starting DIAG in the protection cancel mode

If the protection function works and causes hindrance to trouble diagnosis, cancel the protection function as described below, and it will be possible to enter the DIAG mode. (The protection function other than the excess current detect function will be cancelled.)

Press the “STANDBY/ON key while pressing those two keys indicated in the figure on the right. At this time, keep pressing those two keys for 3 seconds or longer.

Keys of main unit (in sealing panel)

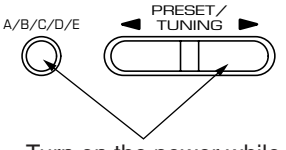

Turn on the power while pressing these keys.

In this mode, the “ZONE2” segment of the FL display of the main unit flashes to indicate that the mode is DIAG mode with the protection functions cancelled.

CAUTION!

Note that during the DIAG mode with protection functions cancelled, even when a danger is encountered, protection functions do not work. Therefore, operating the equipment in this mode may cause danger to it. Use special care for this point when using this mode.

• Canceling DIAG

[1] Before canceling DIAG, execute setting for PRESET of DIAG menu No.9 (Memory initialization inhibited or Memory initialized).
* In order to keep the user memory stored, be sure to select PRESET INHI (Memory initialization inhibited).

[2] Turn off the power by pressing the “STANDBY/ON” key of the main unit or the “STANDBY” key of the remote controller.

• Display provided when DIAG started

When the monitor is connected, DIAGNOSTIC MENU appears on its screen as shown in the figure. (It remains on display until DIAG is cancelled.)

```
DIAGNOSTIC MENU
1. DSP THR    8. RS232C
2. HR  ROUTE  9. PRESET
3. RAM THR    10.AD DATA
4. PRO LOGIC  11.STATUS
5. SP SET     12.DSP RAM
6.DISP CHECK  13.VER/SUM
7.MANL TEST
```

The FL display of the main unit displays the protection function history data and the version (1 alphabet) and the DIAG menu (sub-menu (ANALOG BYPASS) of DIAG menu No.1 DSP THROUGH) a few seconds later.

When there is no history of protection function:

Opening message **DIAG menu display**

When there is no history of protection function

Version (1 alphabet)

After a few seconds

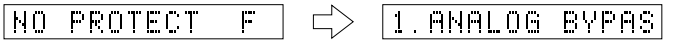

When there is a history of protection function:

When there is a history of protection function against excess current

Version (1 alphabet)

I PROTECT F

Cause: An excessive current flowed to the power amplifier.
Supplementary information: As current of the power transistor is detected, the abnormal channel can be identified by checking the current detect transistor.

Turning on the power without correcting the abnormality will cause the protection function to work immediately and the power supply will instantly be shut off.

When there is a history of protection function against abnormal voltage in the power supply section

Version (1 alphabet)

PS PRT:000 F

Voltage display in %

Cause: The voltage in the power supply section is abnormal.
Supplementary information: The abnormal voltage is displayed in % based on 5V as 100%.

Turning on the power without correcting the abnormality will cause the protection function to work 1 second later and the power supply will be shut off.

When there is a history of protection function against abnormal DC output

Version (1 alphabet)

DC PRT:000 F

Voltage display in %

Cause: DC output of the power amplifier is abnormal.
Supplementary information: The abnormal voltage is displayed in % based on 5V as 100%.

Turning on the power without correcting the abnormality will cause the protection function to work 3 seconds later and the power supply will be shut off.

* Besides above possible causes for abnormality, a cause may lie in disconnected connector, around CPU, etc.
* For the protection voltage value, refer to DIAG menu No.10 described later.

• History of protection function
When the protection function has worked, its history is stored in memory with a backup. Even if no abnormality is noted while servicing the unit, an abnormality which has occurred previously can be defined as long as the backup data has been stored.
The history of the protection function is cleared when DIAG is cancelled by selecting RESERVED (Memory initialized) of DIAG menu No.9 or when the backup data is erased.

• Display during menu operation

During the DIAG operation, the menu list described in the section of the startup screen appears on the superimposed screen and the function at work is indicated on the FL indicator. The contents displayed during the function operation are described in the later section on details of functions.

• Operation procedure of DIAG menu and SUB-MENU

There are No.1 to No.13 MENU items, each of which has some SUB-MENU items.

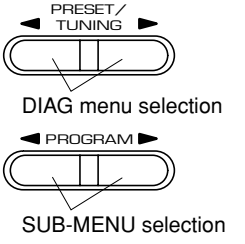

DIAG menu selection

Main unit: Select the menu using ◀ (Forward) and ▶ (Reverse) keys of PRESET/TUNIG located in the sealing panel.
Remote control unit: Select the menu using ▲ (Forward) and ▼ (Reverse) keys.

SUB-MENU selection

Main unit: Select the sub-menu using ◀ (Forward) and ▶ (Reverse) keys of PROGRAM located in the sealing panel.
Remote control unit: Select the sub-menu using + (Forward) and – (Reverse) keys.

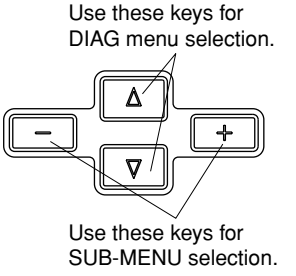

* Only the remote control keys indicated in the MENU List can be used to select a sub-menu directly.

• Functions in DIAG mode

In addition to the DIAG menu items, functions as listed below are available.
• Input selection, 6CH input
• REC OUT (ZONE2) switching
• Center/Rear/Sub-woofer level adjustment
• Muting
• Speaker relay A/B
• Power on/off
• Master volume
It is possible to set to the following volume values directly by transmitting remote control codes during the DIAG operation only.

Volume value (dB)	Remove control code (key)
0	7A-E0 (TUNER 6.1/ES)
-20	7A-E1 (TUNER 9)
-30	7A-E2 (TUNER 10)
MUTE	7A-E3 (TUNER 11)

* Functions related to the tuner and the set menu are not available.
* It is possible to confirm Menu No.11 IF STATUS while keeping the signal process (operation status) of each DIAG menu by using the input mode key of the main unit.

• Initial settings used to start DIAG

Following initial settings are used when starting DIAG.
When DIAG is canceled, these settings are restored to those before starting DIAG.

• Master volume: -40dB
• Input, ZONE2 input: DVD (6CH INPUT OFF)
• Front/Center/Rear/Rear Center/Sub-woofer level: 0dB
• Audio mute: OFF
• Speaker relay A/B: ON
• Speaker setting: LARGE / BASS OUT = BOTH
• DIAG menu: DSP through (analog bypass)

• Details of DIAG menu

1. DSP THROUGH

There are 3 sub-menu items (ANALOG BYPAS, DSP 0dB, DSP FULL BIT).

1.ANALOG BYPAS

ANALOG BYPASS [Remote control code: 7A-90 (PRG9)]

- The input mode is fixed to use the analog (A/D) system.
- The L/R signal is output through the analog bypass without using the DSP block.
- C/RC, FL/FR, RL/RR, SWF signals are output through DSP (see the signal path in the figure below) without using the external DRAM. (Head margin included)

Head margin:

Center: -6dBFS, Rear Center: -3dBFS, FL/FR: -6dBFS, RL/RR: -12dBFS, SWFR: Add L/R signal at -20dBFS.

Reference data (PRE OUT)
INPUT: DVD ANALOG
SWFR: 50Hz, Others: 1kHz

Condition	CENTER	REAR C	FL/FR	RL/RR	SWFR
Both ch, -20 dBV, volume -10 dB	-5.3 dBV	-13.5 dBV	-13.5 dBV	-5.3 dBV	-1.5 dBV

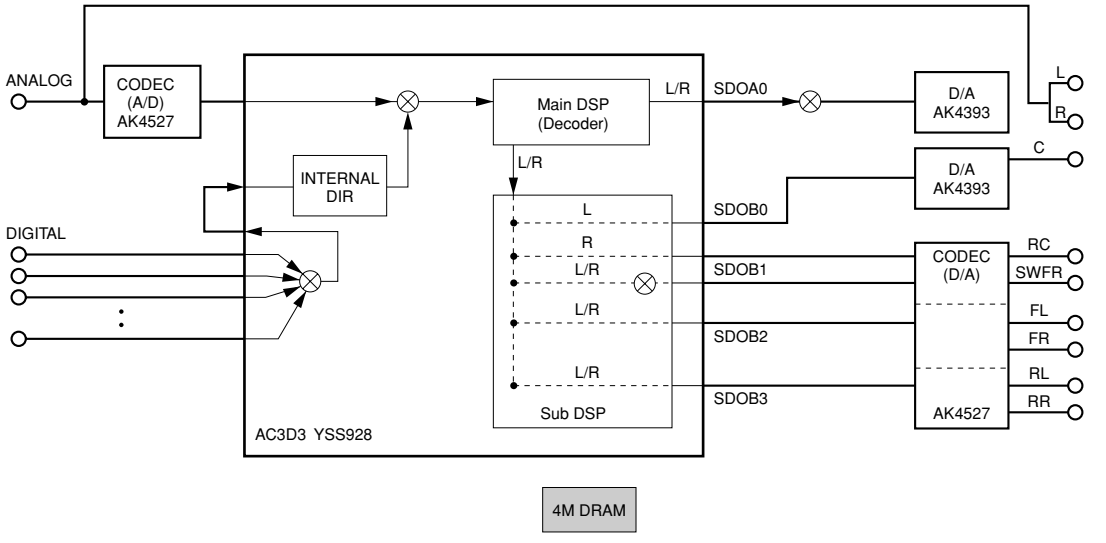

SDOxx represents a terminal name of AC3D3.

The shaded square ( ) means that the element included in it does not operate.

DSP 0dB [Remote control code: 7A-91 (PRG 10)]

1. DSP 0dB

- C/RC, FL/FR, RL/RR, SWF signals are output through DSP (see the signal path in the figure below) without using the external DRAM. (Head margin included)

Head margin:
Main L/R: 0dBFS, Center: -6dBFS, Rear Center: -3dBFS, FL/FR: -6dBFS, RL/RR: -12dBFS, SWFR: Add L/R signal at -20dBFS.

Reference data (PRE OUT)
INPUT: DVD ANALOG
SWFR: 50Hz, Others: 1kHz

Condition	CENTER	REAR C	FL/FR	RL/RR	SWFR
Both ch, -20 dBV, volume -10 dB	-5.3 dBV	-13.5 dBV	-13.5 dBV	-5.3 dBV	-1.5 dBV

[2ch source]

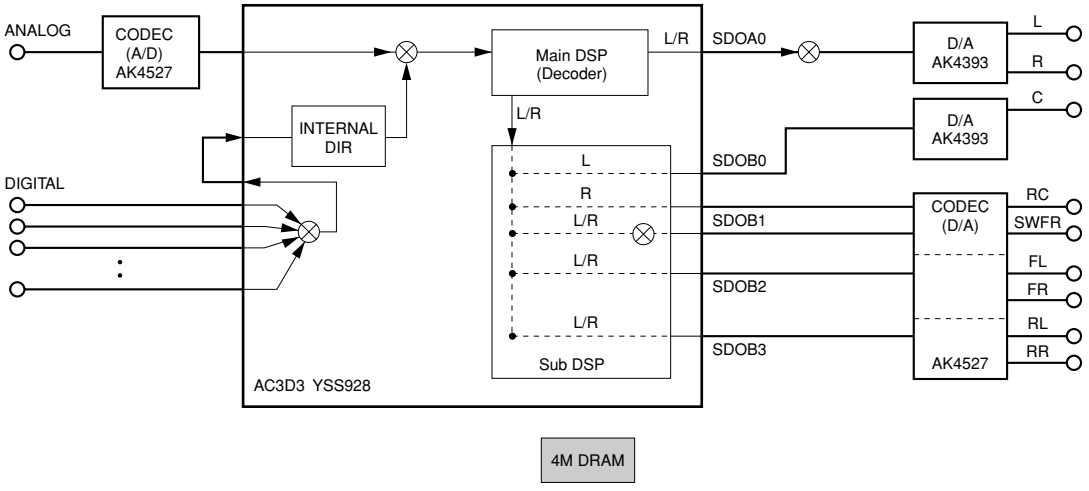

[Multi ch source]

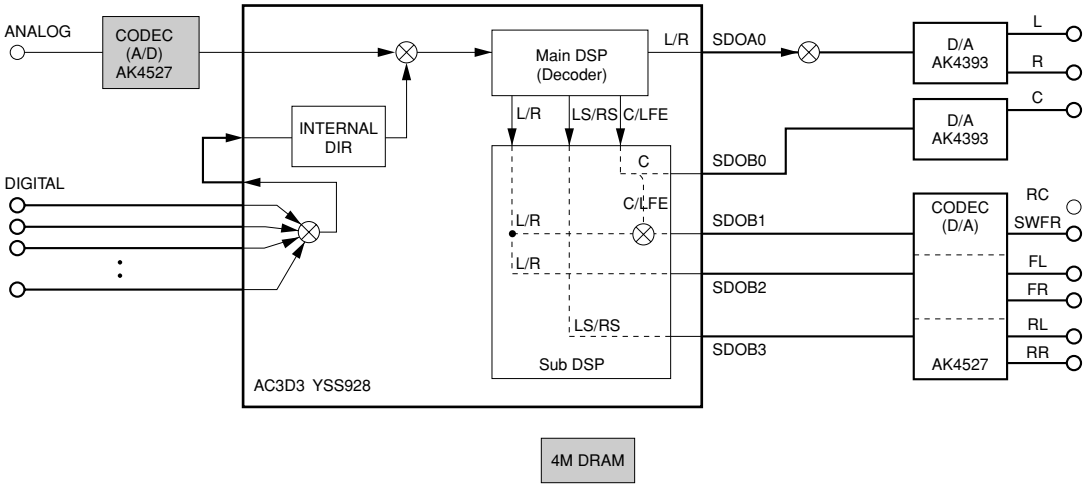

SDOxx represents a terminal name of AC3D3.

The shaded square ( ) means that the element included in it does not operate.

DSP FULL BIT [Remote control code: 7A-92 (PRG 11)]

1.DSP FULL BIT

- The signal is output in digital full bit without including the head margin.
- The same applies as “DSP 0dB” except that the digital data is output in full bit at D/A.
- However, the SWFR signal is not output in full bit.

Reference data (PRE OUT)
INPUT: DVD ANALOG
SWFR: 50Hz, Others: 1kHz

Condition	CENTER	REAR C	FL/FR	RL/RR	SWFR
Both ch, -20 dBV, volume -10dB	+0.7 dBV	-10.5 dBV	-13.5 dBV	+6.7 dBV	-1.5 dBV

2. HP ROUTE (Headphone route)

There are 2 sub-menu items (HP 0dB and HP FULL BIT).

2.HP 0dB

HP 0dB [REMOTE CONTROL CODE: 7A-93 (PRG 12)]

- L/R, C/RC, FL/FR, RL/RR, SWFR signals are output through DSP (see the signal path in the figure below) without using the external DRAM. (Head margin included)
- SDOB3 output is input to Main L/R DAC. Other than that, everything is the same as DSP THROUGH.

Head margin:
Main L/R: -18dBFS, Center: -6dBFS, Rear Center: -3dBFS, FL/FR: -6dBFS, RL/RR: -18dBFS, SWFR: Add L/R signal at -20dBFS.

Reference data (PRE OUT)
INPUT: DVD ANALOG
SWFR: 50Hz, Others: 1kHz

Condition	CENTER	REAR C	FL/FR	RL/RR	SWFR
Both ch, -20 dBV, volume -10 dB	–	–	-13.5 dBV	–	–

[2ch source]

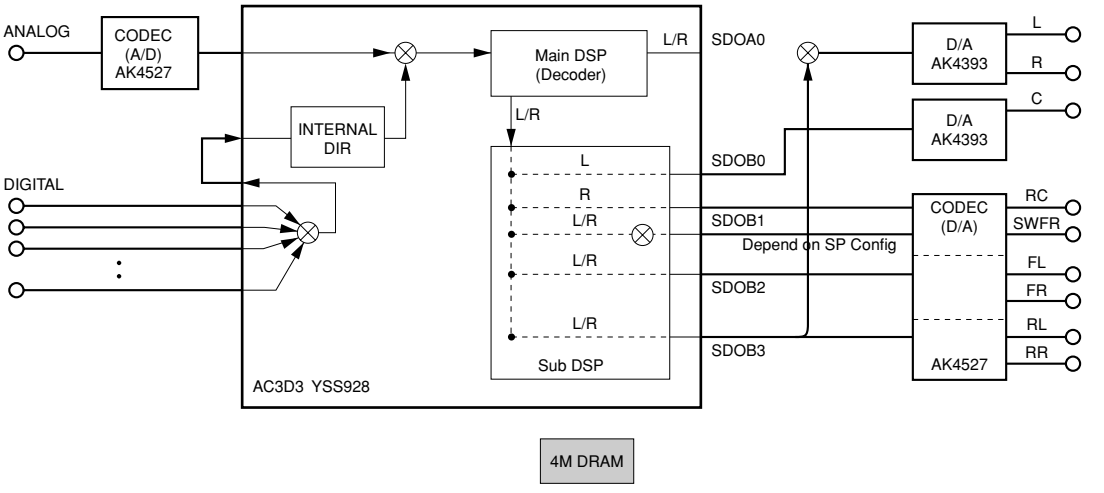

SDOxx represents a terminal name of AC3D3.

The shaded square ( ) means that the element included in it does not operate.

[Multi ch source]

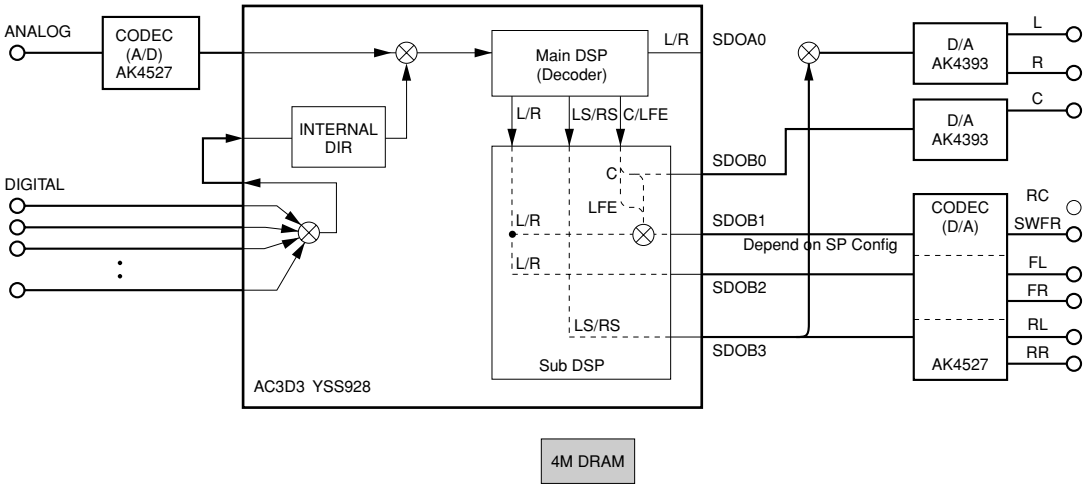

SDOxx represents a terminal name of AC3D3.

The shaded square ( ) means that the element included in it does not operate.

2.HP FULL BIT

HP FULL BIT [Remote control code: 7A-10 (PRESET+)]

- The signal is output in digital full bit without including the head margin.
- The same applies as “HP 0dB” except that the digital data is output in full bit at D/A.
- However, the SWFR signal is not output in full bit.

Reference data (PRE OUT)
INPUT: DVD ANALOG
SWFR: 50Hz, Others: 1kHz

Condition	CENTER	REAR C	FL/FR	RL/RR	SWFR
Both ch, -20 dBV, volume -20 dB	–	–	-5.5 dBV	–	–

3. RAM THROUGH

The main L/R uses the analog through method when analog signals are input and the DSP through method when digital signals are input.
The Center, Rear Center, FL/FR and RL/RR signals are output through the external DRAM.

3.RAM 0dB

RAM 0dB [REMOTE CONTROL CODE: 7A-11 (PRESET-)]

Reference data (PRE OUT)
INPUT: DVD ANALOG
SWFR: 50Hz, Others: 1kHz

Condition	CENTER	REAR C	FL/FR	RL/RR	SWFR
Both ch, -20 dBV, volume -10 dB	-5.3 dBV	-13.5 dBV	-13.5 dBV	-5.3 dBV	-1.5 dBV

3.MAIN ATT

MAIN ATT [REMOTE CONTROL CODE: 7A-12 (PAGE)]

Reference data (PRE OUT)
INPUT: DVD ANALOG
SWFR: 50Hz, Others: 1kHz

Condition	CENTER	REAR C	FL/FR	RL/RR	SWFR
Both ch, -20 dBV, volume -10 dB	-5.3 dBV	-13.5 dBV	-22.5 dBV	-5.3 dBV	-1.5 dBV

[2ch source]

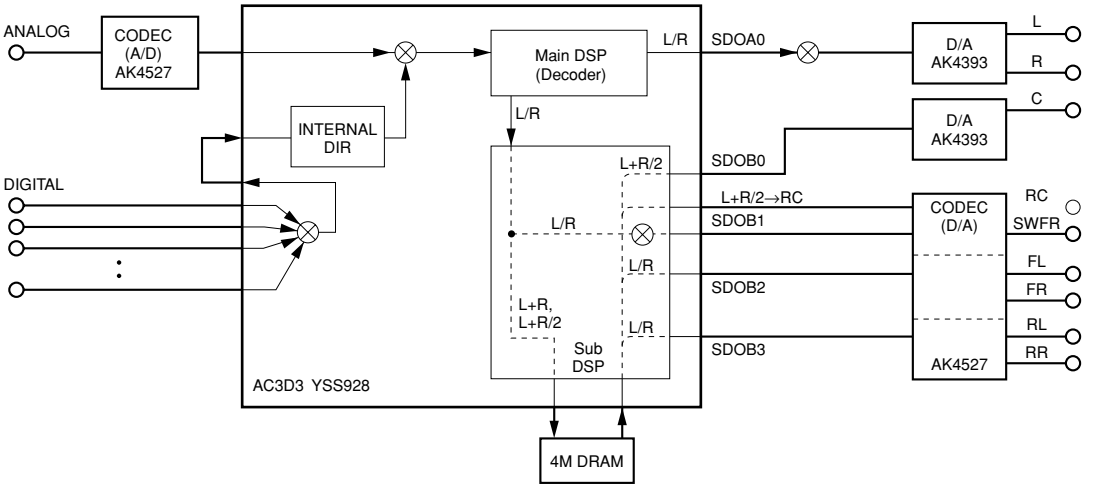

SDOxx represents a terminal name of AC3D3.

The shaded square ( ) means that the element included in it does not operate.

[Multi ch source]

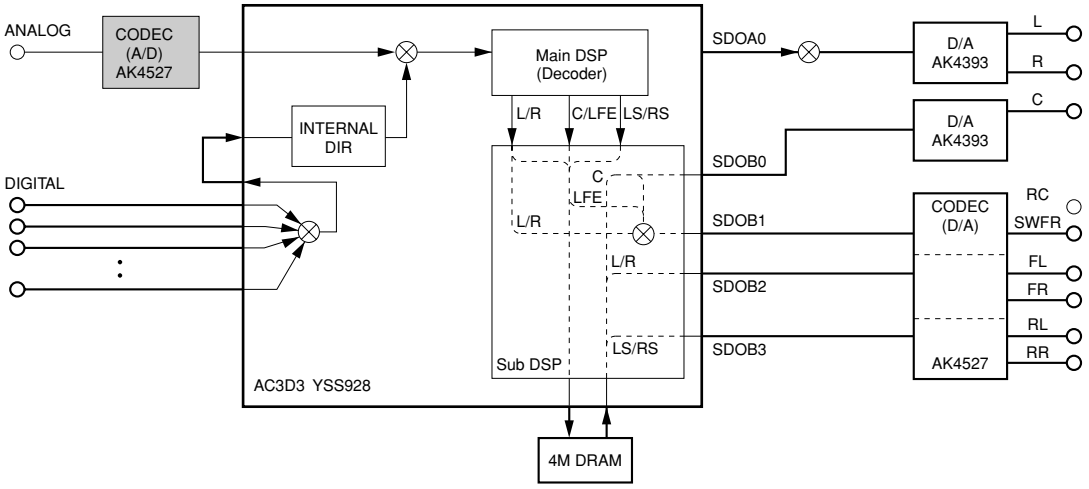

4. PRO LOGIC [YSS928]

Operation conforming to the ordinary Dolby Normal sound field is provided.

[REMOTE CONTROL CODE: 7A-0C (CD FF)]

```
4.  PRO LOGIC
```

Reference data (PRE OUT)
INPUT: DVD ANALOG
SWFR: 50Hz, Others: 1kHz

Condition	CENTER	REAR C	FL/FR	RL/RR	SWFR
Each ch, -20 dBV, volume -10 dB	–	–	-13.5 dBV	–	–
Both ch, -20 dBV, volume -10 dB	-2.3 dBV	–	–	–	–
Both ch, -20 dBV (reverce phase), volume -10 dB	–	–	–	-5.3 dBV	–

[2ch source] Same as ordinary Pro Logic except that the auto input balance function is off.

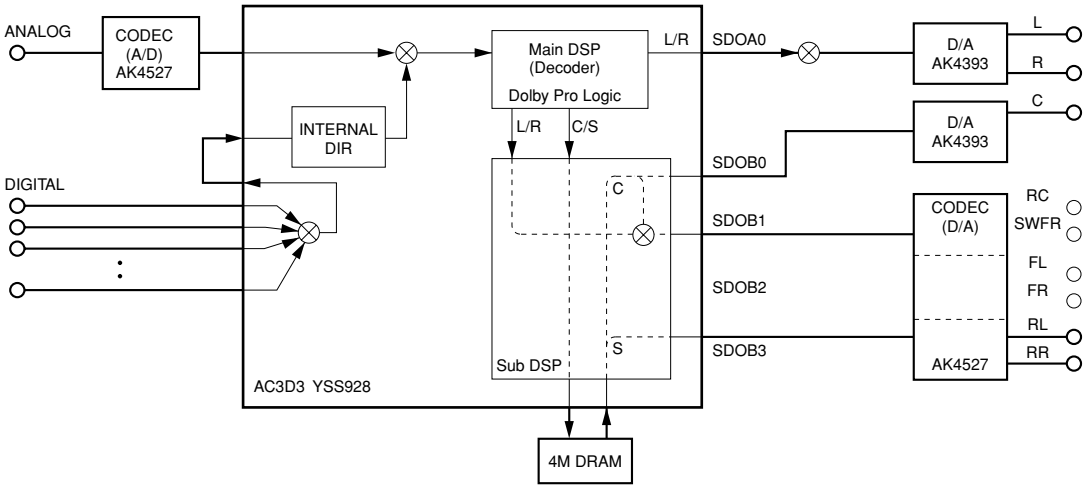

SDOxx represents a terminal name of AC3D3.

The shaded square ( ) means that the element included in it does not operate.

[Dolby D./dts Normal]

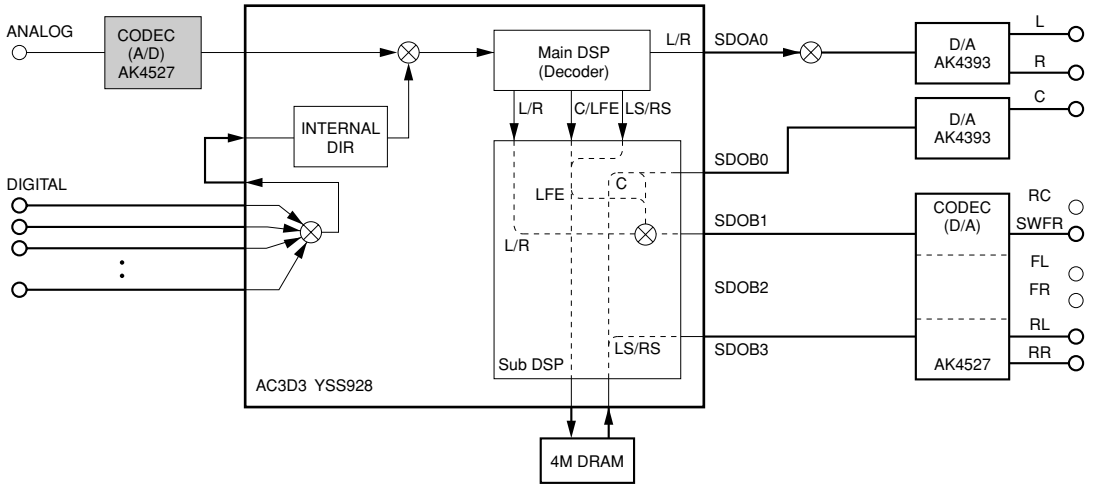

SDOxx represents a terminal name of AC3D3.

The shaded square ( ) means that the element included in it does not operate.

5. SPEAKERS SET

The input signal is automatically identified in the order of dts → DOLBY DIGITAL → PCM → Analog.
There are five sub-menu items as follows. The signals output from the DSP block are the same as 1. DSP THROUGH: DSP 0dB.

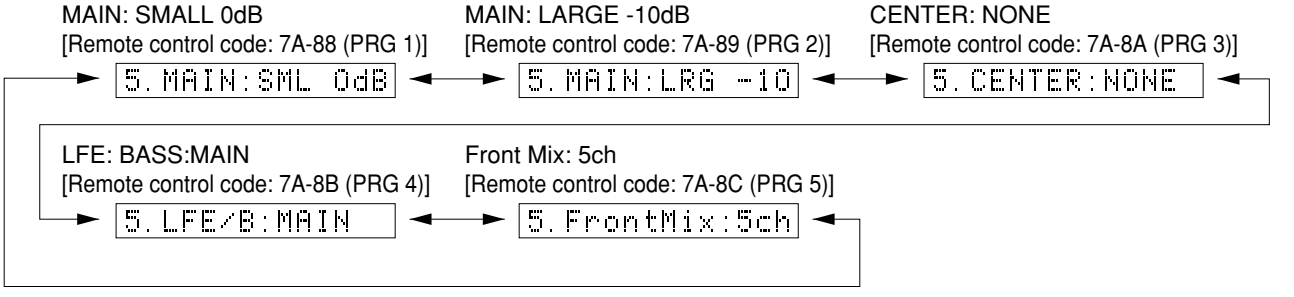

The analog switch settings for each sub-menu are as shown in the table below.

	Sub-menu	CENTER SP	REAR SP	MAIN SP	MAIN LVL	LFE/BASS
1	MAIN:SMALL 0dB	LARGE	LARGE	SMALL	0dB	SWFR
2	MAIN:LARGE -10	LARGE	LARGE	LARGE	-10dB	BOTH
3	CENTER:NONE	NONE	LARGE	LARGE	0dB	BOTH
4	LFE/BASS:MAIN	SMALL	SMALL	LARGE	0dB	MAIN
5	FRONT MIX:5CH	LARGE	LARGE	LARGE	0dB	BOTH

LARGE: Signals are output in all bandwidths.
SMALL: Signals lower than 90Hz are mixed in the channel specified by LFE/BASS.
NONE: The center contents are distributed to the MAIN L/R channels after -3dB.

Reference data (PRE OUT)
INPUT: DVD ANALOG
SWFR: 50Hz, Others: 1kHz

Sub-menu	Condition	CENTER	REAR C	FL/FR	RL/RR	SWFR
MAIN:SMALL 0dB	Both ch, -20dBV, volume -10dB, 1kHz/90Hz	-5.3dBV	-13.5dBV	-13.5/-16.5dBV	-5.3dBV	-1.5dBV
MAIN:LARGE -10dB	Both ch, -20dBV, volume -10dB	-5.3dBV	-13.5dBV	-23.5dBV	-5.3dBV	-1.5dBV
CENTER:NONE	Both ch, -20dBV, volume -10dB	–	-13.5dBV	-16.5dBV	-5.3dBV	-1.5dBV
BASS:MAIN	Both ch, 50Hz, -20dBV, volume -10dB	-8.3dBV (90Hz)	-13.5dBV	-12.0dBV	-8.3dBV (90Hz)	–
Front Mix:5ch	Both ch, -20dBV, volume -10dB	-5.3dBV	-13.5dBV	-16.5dBV	-5.3dBV	-1.5dBV

6. DISPLAY CHECK

This program is used to check the FL display section. The display condition varies as shown below according to the sub-menu operation. The signals are processed using EFFECT OFF (The L/R signal is output using ANALOG MAIN BYPASS.) The video signal internal/external synchronization switching is controlled by the microprocessor. When the initial message is displayed and all the FL segments light up, it is switched to the internal synchronization but other than that it is forced to the external synchronization setting.
Also, except for the initial display, 128 pictographs for checking the OSD driver are used for the video signal output display.

Reference data (PRE OUT)
INPUT: DVD ANALOG
SWFR: 50Hz, Others: 1kHz

Condition	CENTER	REAR C	FL/FR	RL/RR	SWFR
Both ch, -20 dBV, volume -10 dB	–	–	-13.5 dBV	–	–

[Remote control code: 7A-8F (PRG 8)]

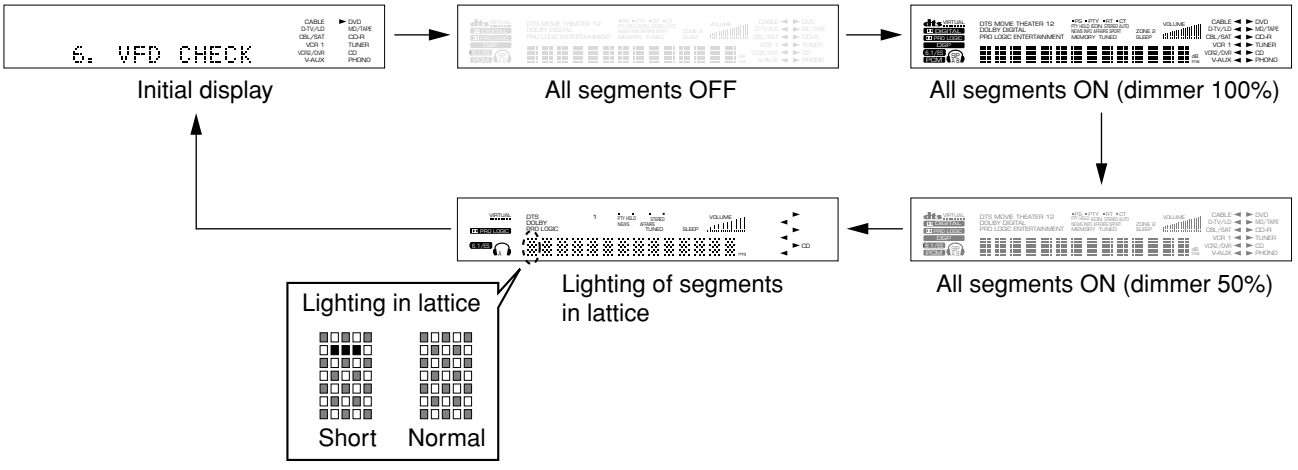

Segment conditions of the FL driver and the FL tube are checked by turning ON and OFF all segments. Next, the operation of the FL driver is checked by using the dimmer control. Then a short between segments next to each other is checked by turning ON and OFF all segments alternately (in lattice). (In the above example, the segments in the second row from the top are shorted.)

7. MANUAL TEST

The noise generator with a built-in DSP outputs the test noise through the channels specified by the sub-menu.
The noise frequency for LFE is 35 to 250 Hz. Other than that, the center frequency is 800Hz.

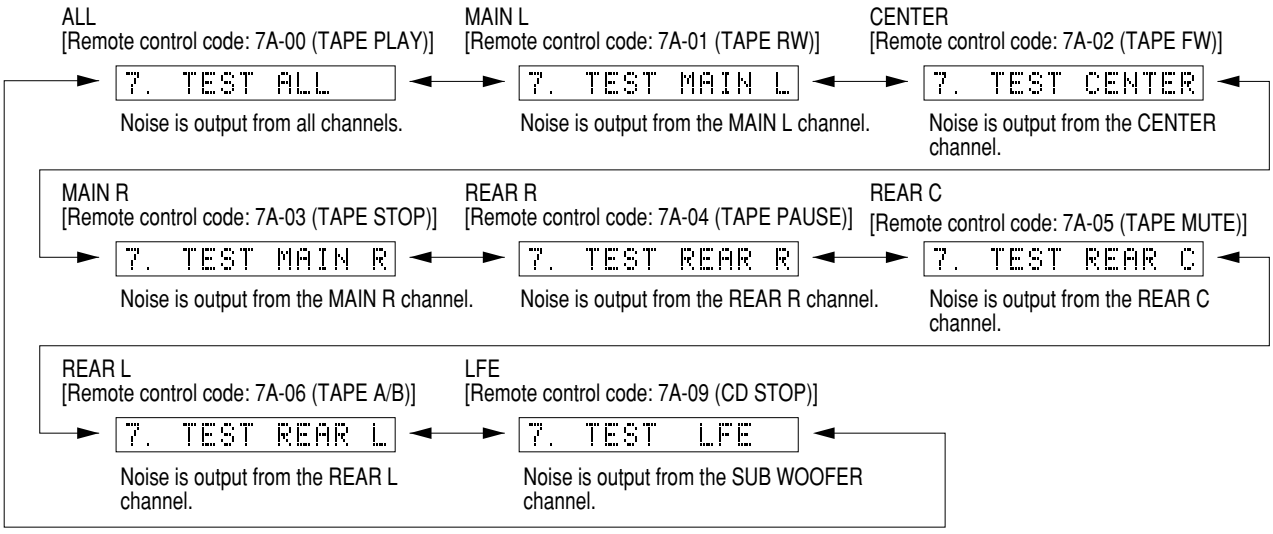

8. RS-232C

This menu is used to check transmission of the data and the flow port of the hardware.
With the power turned off, short between pins No.2 (RxD) and No.3 (TxD) and between pins No.7 (RTS) and No.8 (CTS) of the RS-232C terminal. (Be sure to turn off the power when shorting pins.)
Start DIAG and select the menu.
There are two sub-menu items.
The signals are processed using EFFECT OFF. (The L/R signals are output using ANALOG BYPASS setting.)

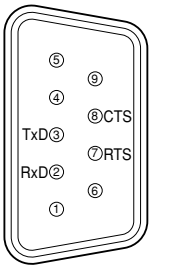

8.TxRx DATA:XX

TxRx DATA [Remote control code: –]
This sub-menu is used to check transmission of the test data. "OK" appears when the data is transmitted properly and "NG" when it is not.
In this mode, NULL command transmission is continued after the test command is transmitted.

8.HARD FLOW:XX

HARD FLOW [Remote control code: –]
This sub-menu is used to check operation of the flow port of the hardware. "OK" appears when the check result is satisfactory and "NG" when it is not.

9. PRESET

This menu is used to reserve and inhibit initialization of the back-up RAM. The signals are processed using EFFECT OFF. (The L/R signal is output using ANALOG MAIN BYPASS.)

9.PRESET INHI

↕

9.PRESET RSRV

PRESET INHIBIT (Initialization inhibited) [REMOTE CONTROL CODE: –]
RAM initialization is not executed. Select this sub-menu to protect the values set by the user.

PRESET RESERVED (Initialization reserved) [REMOTE CONTROL CODE: 7A-57 (SLEEP)]
Initialization of the back-up RAM is reserved. (Actually, initialization is executed next time when the power is turned on.) Select this sub-menu to reset when shipped out of the factory or to reset RAM.

CAUTION: Before setting to the PRESET RESERVED, write down the existing preset memory content of the Tuner in a table as shown below. (This is because setting to the PRESET RESERVED will cause the user memory content to be erased.)

Preset group	P1	P2	P3	P4	P5	P6	P7	P8
A								
B								
C								
D								
E								

• **PRESET STATIONS**

STATION		FM FACTORY PRESET DATA (MHz)	
PAGE	NO.	U, C	R, T, A, B, G, L
A/C/E	1	87.5	87.5
	2	90.1	90.1
	3	95.1	95.1
	4	98.1	98.1
	5	107.9	108.0
	6	88.1	88.1
	7	106.1	106.1
	8	107.9	108.0

STATION		AM FACTORY PRESET DATA (kHz)	
PAGE	NO.	U, C, R, T	A, B, G, L
B/D	1	630	630
	2	1080	1080
	3	1440	1440
	4	530	531
	5	1710	1611
	6	900	900
	7	1350	1350
	8	1400	1404

10. AD DATA CHECK

This menu is used to display the A/D conversion value of the main CPU which detects panel keys of the main unit and protection functions in % using the sub-menu. (Reference voltage 5V as 100%) During signal processing, the condition before execution is maintained.

When in K0/K1 page, it is not possible to operate the keys of the main unit because the values of all keys are detected. But one click on the volume encoder of the main unit to the right or left will cancel this function and sets to the next sub-menu. Note, however, that clicking there more than once would change the DIAG menu. In such a case, return to the DIAG menu which has been used for measurement. During signal processing, the condition before execution of this menu is maintained.

REC-OUT:085

REC OUT (Select position) [Remote control code: –]
Refer to table 1.

K0:100 K1:100

K0/K1 (Panel key of main unit) [Remote control code: –]
A/D of the key fails to function properly when the standard value is deviated by ±4%. In this case, check the constant of partial pressure resistor, solder condition, etc. Refer to table 2.

[Table 1]

Display	REC OUT Select
0	CD-R
15	CBL/SAT
30	PHONO
44	V-AUX
60	MD/TAPE
76	D-TV/LD
122	TUNER
137	VCR1
153	CD
170	VCR2/DVR
186	SOURCE
202	DVD

[Table 2]

Display	K0	K1
0	PRESET ▶	6CH INPUT
10	PRESET ◀	INPUT ▶
20	PRESET/TUNING	INPUT ◀
30	FM/AM	INPUT MODE
40	MEMORY	SPEAKERS A
50	TUNING MODE	SPEAKERS B
60	RDS MODE	EFFECT
70	RDS EON	PROGRAM ▶
80	PTY MODE	PROGRAM ◀
90	PTY START	A/B/C/D/E
100	KEY OFF	KEY OFF

DC:007 PS:025

DC/PS (Protection) [REMOTE CONTROL CODE: 7A-0B (CD SKIP-)]

DC: DC detect protection value (Normal value: 1 to 13) 0.05V~0.65V (reference voltage)

PS: Power voltage protection value (Normal value: 18 to 32) 0.9V~1.6V (reference voltage)

* If DC or PS is out of the normal value range, the protection function works to turn off the power.

11. IF STATUS (Input function status)

Using the sub-menu, the status data is displayed one after another in the hexadecimal notation.
During signal processing, the status before execution of this menu is maintained.

* Numeric values in the figure example are for reference.

IST (Internal status) [REMOTE CONTROL CODE: –]
Indicates the status information of the microprocessor.

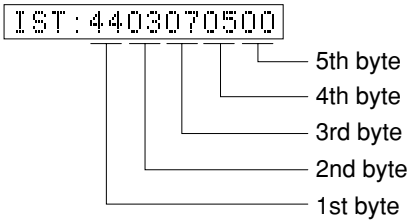

<1st byte> Digital input/output setting value
Upper 4 bits: REC OUT selected/lower 4 bits: INPUT selected

Numeric value	Selection	Numeric value	Selection	Numeric value	Selection	Numeric value	Selection
0	NONE	4	OPT3	8	COAX1	C	COAX3
1	FRONT	5	OPT4	9	COAX2	D	RF
2	OPT1	6	OPT5	A	COAX4		
3	OPT2	7	OPT6	B	COAX5		

<2nd byte> Fs information of reproduction signal

Display	00	01	02	03	04	05	06	07	08	09
Fs (kHz)	Analog	32	44.1	48	64	88.2	96	Unknown NRM	Unknown DBL	Not defined

<3rd byte> Audio code mode information of reproduction signal

Display	00	01	02	03	04	05	06	07	08	09	0A	0B
Audio Code	1+1	1/0	2/0	3/0	2/1	3/1	2/2	3/2	2/3	3/3	dts7.1	Not defined

<4th byte> Format information of reproduction signal
*1: Analog processing is used as digital reproduction is not possible because of a commercial bit or 4-ch audio reason.

Display	Signal format
00	Analog (Unlock)
01	Incorrect digital (*1)
02	Digital Data
03	IEC1937 Data
04	PCM Audio
05	Dolby Digital
06	D.D.Karaoke
07	D.D.EX
08	RED dts
09	ORANGE dts
0A	dts ES
0B	NONE PCM

<5th byte> Signal processing status information
*2: With digital signals other than 32kHz, 44.1kHz and 48kHz, through processing method is used for reproducible signals.

bit7	MUTE request	bit3	–
bit6	Red dts flashing	bit2	Through & bypass (*2)
bit5	6.1ch. field being processed	bit1	–
bit4	FULL MUTE (ON: 1)	bit0	dts analog mute

CS1-5 [Remote control code: -]: Indicates channel status information of the input signal (IEC60958).

CS1:0299000200 ----- CS5:00000000

BI1-4 [Remote control code: -]: Indicates information of the bit stream included in the DOLBY DIGITAL signal.

BI1:1C40E1301B ----- BI4:F500F800

BS1-4 [Remote control code: -]: Indicates information of the bit stream included in the dts signal.

BS1:FFFFFFFFFF ----- BS4:FFFFFFFF

YS1-3 [Remote control code: -]: Indicates device status information of YSS928 (IC501). * The numeric value in the figure is an example for reference.

YS1:FE0218070F

Byte No.	Function
1	YSS MUTE Reg
2	YSS MODE Reg
3	YSS IPORT BIT 7-0
4	YSS IPORT BIT 14-8
5	YSS OPORT

YS2:0101418000

Byte No.	Function
1	IEC 1937 Preamble Pc
2	AC-3 Data Stream No
3	AC-3D Decode Status
4	YSS ZERO Reg
5	MIREG

YS3:1A41803D

Byte No.	Function
1	DIR Status
2	DIR fs
3	DIR fs count
4	YSS ZEROBF

12. DSP RAM CHECK

This menu is used to self-diagnose whether or not bus connection of YSS928 (IC501) and the external RAM (IC502) is made properly.
During signal processing, the status before execution of this menu is maintained.

Bus Check:NoEr

Bus Check [Remote control code: 7A-0A (CD SKIP+)]
The address bus and the data bus are checked and the connection condition is displayed.
When no error is detected, "NoEr" appears on display.

Display	Description
WAIT	Bus being checked.
NoEr	No error detected.
DATA	Data bus shorted or open.
ADDR	Address bus shorted or open.

13. MICROPROCESSOR INFORMATION

There are 4 sub-menu display.

The version, checksum and the port specified by the microprocessor are displayed. The signal is processed using EFFECT OFF. The checksum is obtained by adding the data at every 16 bits for each program area and expressing the result as a 4-figure hexadecimal data.

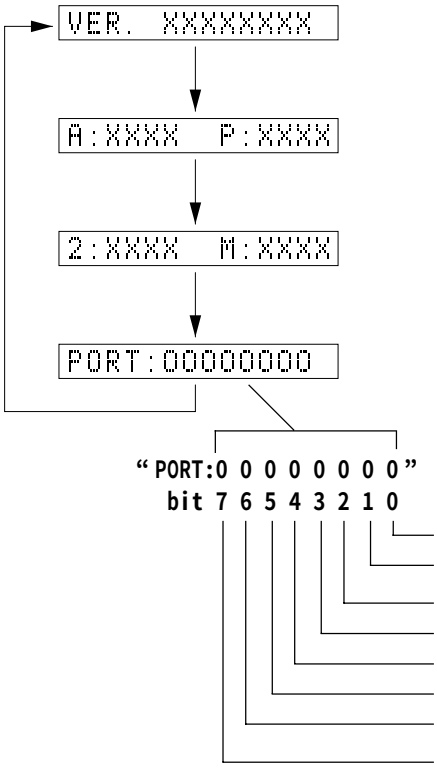

Version [Remote control code: 7A-0D (CD REW)]
Release 1 figure / Main 2 figures / DSP 2 figures / Communication 1 figure / Boot manufacturer 1 figure / Boot 232c 1 figure

Checksum [Remote control code: –]
A : All P : Program area

Checksum [Remote control code: –]
2 : Boot 232C M : Boot manufacturer

Check of port setting for judging microprocessor function [Remote control code: –]

*1

Tuner mode 0	Tuner mode 1	Tuner frequency
0	0	AM: 531-1611kHz/9kHz FM: 76.0-90.0MHz/100kHz
0	1	AM: 531-1611kHz/9kHz FM: 87.5-108.0MHz/50kHz
1	0	AM: 530-1710kHz/10kHz FM: 87.5-107.9MHz/200kHz
1	1	R destination, Port6: LOW AM: 530-1710kHz/10kHz FM: 87.5-108.0MHz/100kHz HIGH AM: 531-1611kHz/9kHz FM: 87.5-108.0MHz/50kHz

■ AMP ADJUSTMENT

Confirmation of Idling Current of Main (1) P. C. B.

- Right after power is turned on, confirm that the voltage across the terminals of R65 (Main Lch), R72 (Main Rch), R86 (Center), R77 (Rear Lch), R83 (Rear Rch) are between 0.1mV and 10.0mV.
- If it exceeds 10.0mV, open (cutoff) R31 (Main Lch), R38 (Main Rch), R55 (Center), R45 (Rear Lch), R50 (Rear Rch) and reconfirm the voltage.
- Confirm that the voltage is 0.20mV ~ 15.0mV after 60 minutes.

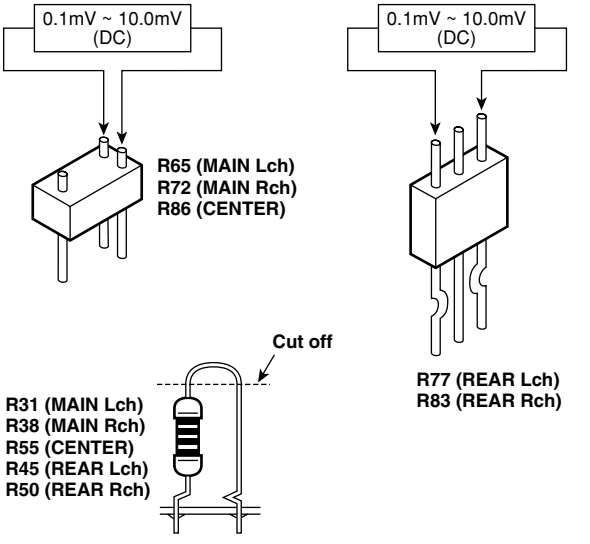

■ DISPLAY DATA

● **V901 : 16-BT-81GK (V5917600)**

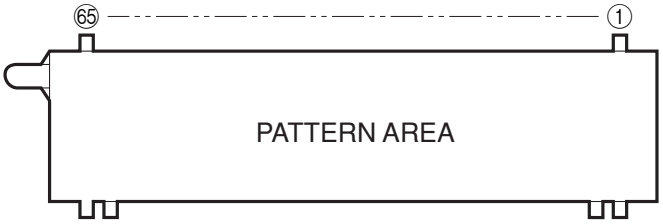

● **PIN CONNECTION**

Pin No.	65	64	63	62	61	60	59	58	57	56	55	54	53	52	51	50	49	48	47	46	45	44	43	42	41	40	39	38	37	36	35	34	33
Connection	F2	F2	NP	P37	P36	P35	P34	P33	P32	IC	NP	Fd	Fd	NP	IC	P31	P30	P29	P28	P27	P26	P25	P24	P23	P22	P21	P20	P19	P18	P17	P16	P15	P14

Pin No.	32	31	30	29	28	27	26	25	24	23	22	21	20	19	18	17	16	15	14	13	12	11	10	9	8	7	6	5	4	3	2	1
Connection	P13	P12	P11	P10	P9	P8	P7	P6	P5	P4	P3	P2	P1	16G	15G	14G	13G	12G	11G	10G	9G	8G	7G	6G	5G	4G	3G	2G	1G	NP	F1	F1

Note : 1) F1, F2 ..... Filament 2) NP ..... No pin 3) DL ..... Datum Line 4) 1G ~ 16G ..... Grid
5) IC ..... Internal connection (IC pin should be electrically open on the PC board.) 6) Fd terminals are to be supplied through 51kΩ from Ec.
7) Field of vision is a minimum of 36˚ from the upper side. 26˚ from the lower side.

● **GRID ASSIGNMENT**

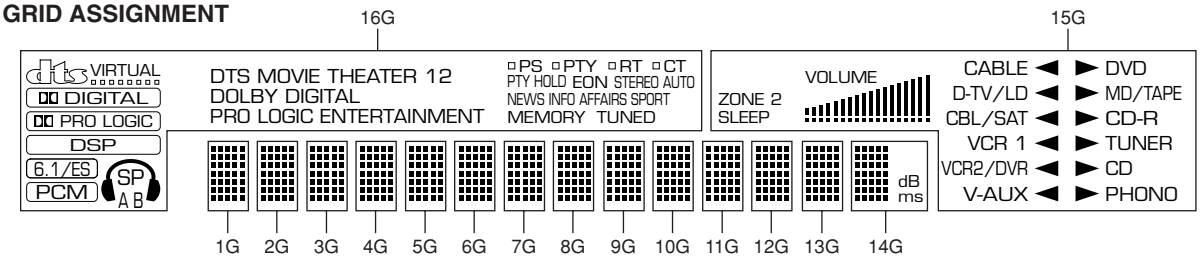

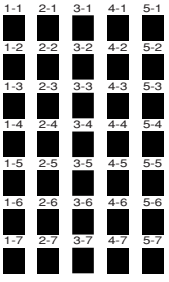

(1G~14G)

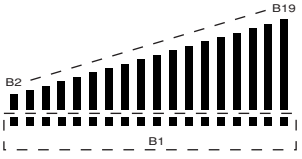

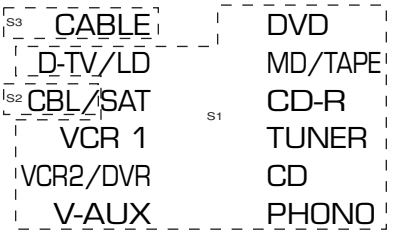

● **ANODE CONNECTION**

	16G	15G	14G	13G~1G
P1	dts	ZONE 2	1-1	1-1
P2	VIRTUAL	SLEEP	2-1	2-1
P3	DIGITAL	VOLUME	3-1	3-1
P4	PRO LOGIC	B1	4-1	4-1
P5	DSP	B2	5-1	5-1
P6	6.1/ES	B3	1-2	1-2
P7	PCM	B4	2-2	2-2
P8	🎧	B5	3-2	3-2
P9	SP	B6	4-2	4-2
P10	A	B7	5-2	5-2
P11	B	B8	1-3	1-3
P12	DTS	B9	2-3	2-3
P13	MOVIE THEATER	B10	3-3	3-3
P14	1	B11	4-3	4-3
P15	2	B12	5-3	5-3
P16	DOLBY	B13	1-4	1-4
P17	DIGITAL	B14	2-4	2-4
P18	PRO LOGIC	B15	3-4	3-4
P19	ENTERTAINMENT	B16	4-4	4-4

	16G	15G	14G	13G~1G
P20	□ (PS)	B17	5-4	5-4
P21	PS	P18	1-5	1-5
P22	□ (PTY)	B19	2-5	2-5
P23	PTY	► PHONO	3-5	3-5
P24	□ (RT)	► CD	4-5	4-5
P25	RT	► TUNER	5-5	5-5
P26	□ (CT)	► CD-R	1-6	1-6
P27	CT	► MD/TAPE	2-6	2-6
P28	PTY HOLD	► DVD	3-6	3-6
P29	EON	CABLE ◄	4-6	4-6
P30	STEREO	D-TV/LD ◄	5-6	5-6
P31	AUTO	CBL/SAT ◄	1-7	1-7
P32	NEWS	VCR 1 ◄	2-7	2-7
P33	INFO	VCR2/DVR ◄	3-7	3-7
P34	AFFAIRS	V-AUX ◄	4-7	4-7
P35	SPORT	S1	5-7	5-7
P36	MEMORY	S2	dB	–
P37	TUNED	S3	ms	–

■ IC DATA

IC501 : YSS928
DSP/DOLBY/DTS

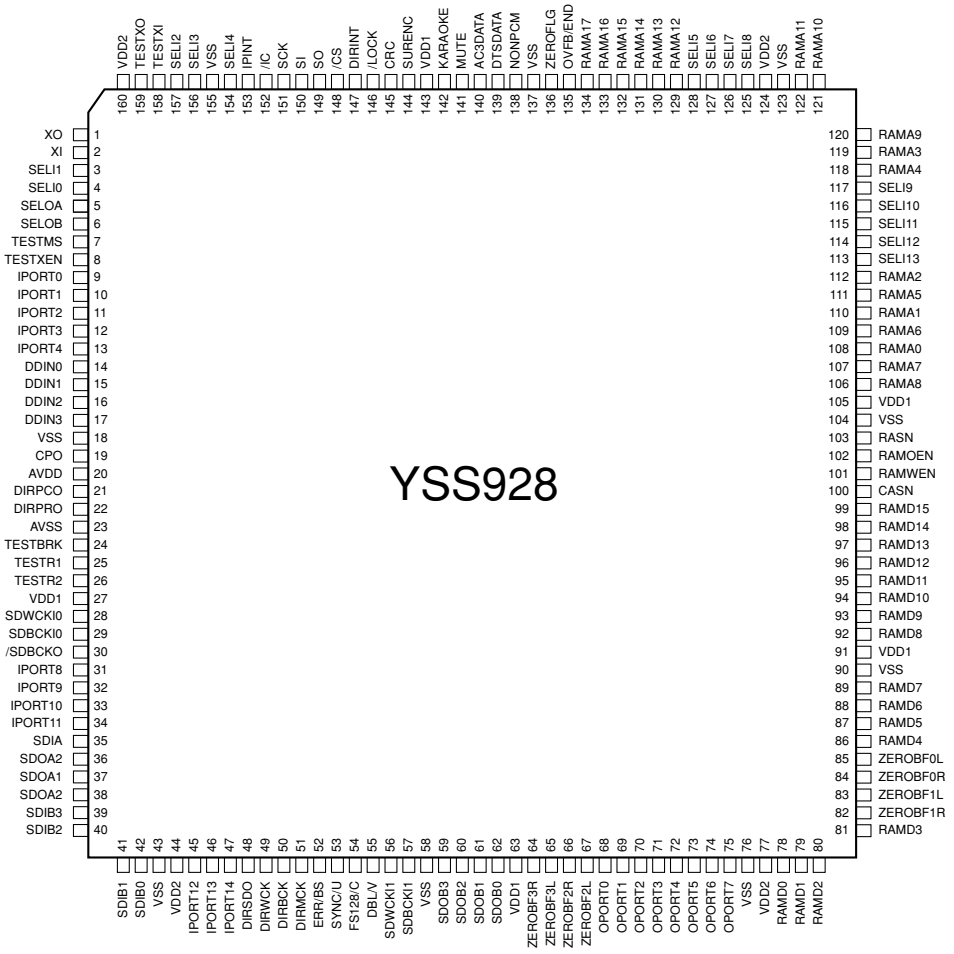

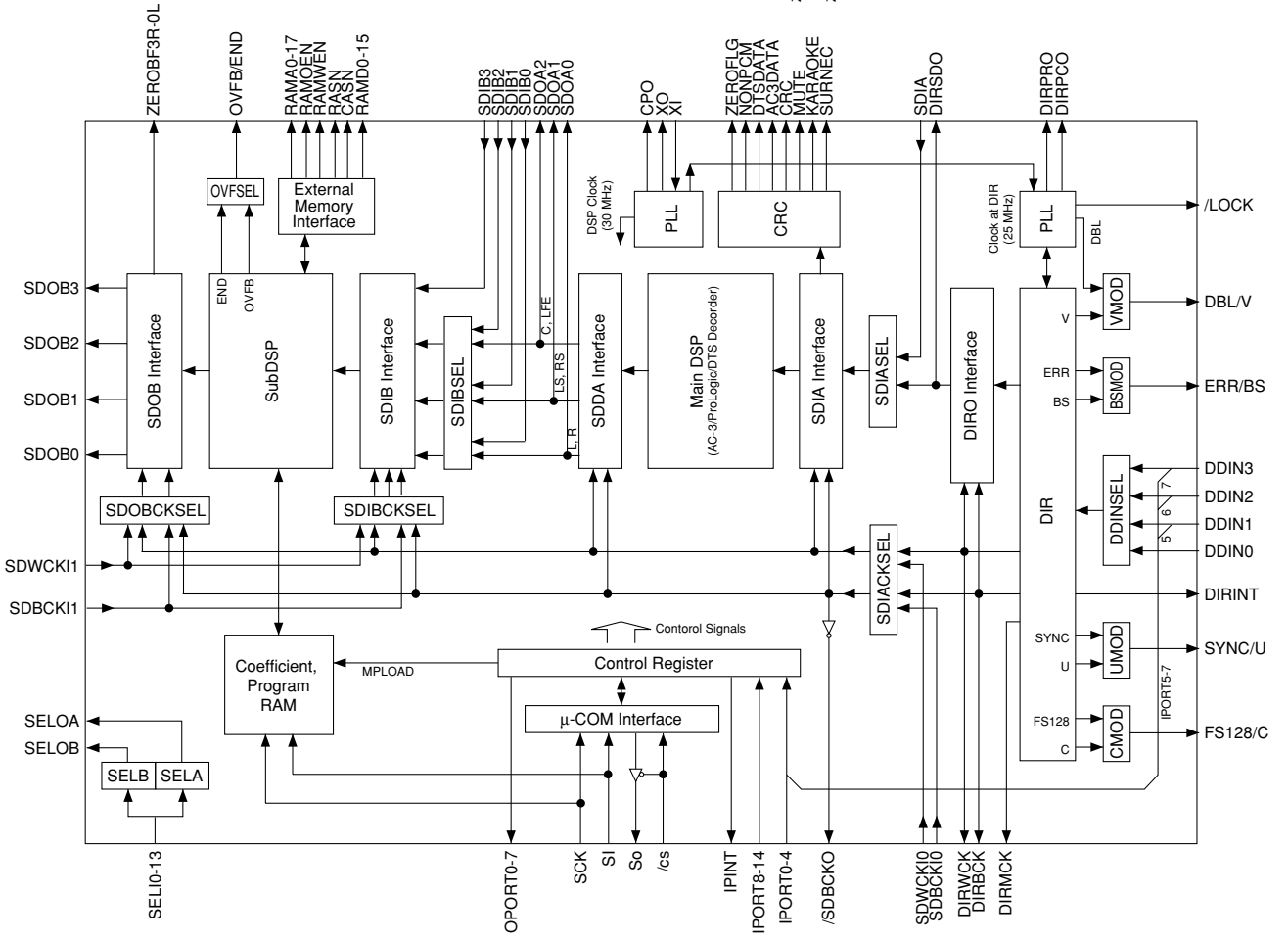

IC501 : YSS928

Pin Description

No.	Name	I/O	Function
1	XO	O	Crystal oscillator connection terminal
2	XI	I	Crystal oscillator connection terminal (24.576 MHz)
3	SELI1	I+	Built-in selector input 1
4	SELI0	I+	Built-in selector input 0
5	SELOA	O+	Built-in selector A output
6	SELOB	O+	Built-in selector B output
7	TESTMS	I+	Test terminal Unconnected
8	TESTXEN	I+	Test terminal Unconnected
9	IPORT0	I+	General purpose input terminal (CXDTA: COAX A detect)
10	IPORT1	I+	General purpose input terminal (CXDTB: COAX B detect)
11	IPORT2	I+	General purpose input terminal (CXDTE: COAX E detect)
12	IPORT3	I+	General purpose input terminal (MUTO: DEM MUTO detect)
13	IPORT4	I+	General purpose input terminal (RFYN: RF DEM distinction H:RF Yes)
14	DDIN0	Is	DIR: Digital audio interface data input terminal 0
15	DDIN1	Is	DIR: Digital audio interface data input terminal 1 / general purpose input terminal [COAX23: COAX in distinction x2 from x3 (RF terminal is not count) H:x3)]
16	DDIN2	Is	DIR: Digital audio interface data input terminal 2 / general purpose input terminal [OPT56: OPT in distinction x5 from x6 H:x6]
17	DDIN3	Is	DIR: Digital audio interface data input terminal 3 / general purpose input terminal [SDF: SDOB Format L:C/(L or R) H:–/(L or R)]
18	VSS	–	GND
19	CPO	A	PLL filter connection terminal
20	AVDD	–	+3.3V power supply (for DIR block)
21	DIRPCO	A	DIR: PLL filter connection terminal
22	DIRPRO	A	DIR: PLL filter connection terminal
23	AVSS	–	GND (for DIR block)
24	TESTBRK	I+	Test terminal Unconnected
25	TESTR1	I+	PLL initialize signal input terminal for DSP
26	TESTR2	I+	Test terminal Unconnected
27	VDD1	–	+3.3V power supply (for terminal block)
28	SDWCKI0	I+	Word clock input terminal for SDIA, SDOA, SDIB, SDOB interfaces
29	SDBCKI0	I+	Word clock input terminal for SDIA, SDOA, SDIB, SDOB interfaces
30	/SDBCKO	O	Inverted clock output terminal for inverted clock of DIRBCK or SDBCKI0
31	IPORT8	I+	IPINT compatible general purpose input terminal (FINV: Front Effect output phase L:Norm H:Invert)
32	IPORT9	I+	IPINT compatible general purpose input terminal (NPCMP: NONPCM ↑ interrupted)
33	IPORT10	I+	IPINT compatible general purpose input terminal (NPCMN: NONPCM ↓ interrupted)
34	IPORT11	I+	IPINT compatible general purpose input terminal (DSPMUTP: DSP MUTE ↑ interrupted)
35	SDIA	I	bitstream or PCM data input terminal to MainDSP
36	SDOA2	O	Output terminal for PCM from MainDSP (C, LFE output)
37	SDOA1	O	Output terminal for PCM from MainDSP (LS, RS output)
38	SDOA0	O	Output terminal for PCM from MainDSP (L, R output)
39	SDIB3	I+	Input terminal 3 for PCM to SubDSP
40	SDIB2	I+	Input terminal 2 for PCM to SubDSP
41	SDIB1	I+	Input terminal 1 for PCM to SubDSP
42	SDIB0	I+	Input terminal 0 for PCM to SubDSP
43	VSS	–	GND
44	VDD2	–	+2.5V power supply (for internal circuit)
45	IPORT12	I+	IPIN compatible general purpose input terminal (DBLP: DIR DBL ↑ interrupted)
46	IPORT13	I+	IPIN compatible general purpose input terminal (DBLN: DIR DBL ↓ interrupted)
47	IPORT14	I+	IPIN compatible general purpose input terminal (DIRINTP: DIR INT ↑ interrupted)
48	DIRSDO	O	bitstream or PCM data output terminal from DIR
49	DIRWCK	O	DIR: Serial data word clock (fs) output terminal
50	DIRBCK	O	DIR: Serial data bit clock (64fs) output terminal
51	DIRMCK	O	DIR: Serial data master clock (256fs or 128fs) output terminal
52	ERR/BS	O	DIR: Data error detect / block start output terminal
53	SYNC/U	O	DIR: Serial data synchronous timing / user data output terminal
54	FS128/C	O	DIR: Serial data master clock 128fs / channel status output terminal
55	DBL/V	O	DIR: Double rate lock detect / parity flag output terminal
56	SDWCKI1	I+	Word clock input terminal for SDIB, SDOB interface
57	SDBCKI1	I+	Bit clock input terminal for SDIB, SDOB interface
58	VSS	–	GND
59	SDOB3	O	Output terminal for PCM from SubDSP (RL/RR)
60	SDOB2	O	Output terminal for PCM from SubDSP (FL/FR)
61	SDOB1	O	Output terminal for PCM from SubDSP (RC/SW)
62	SDOB0	O	Output terminal for PCM from SubDSP C/(L or R)
63	VDD1	–	+3.3V power supply (for terminal block)
64	ZEROBF3R	O+	SDOB3 Rch zero flag output terminal
65	ZEROBF3L	O+	SDOB3 Lch zero flag output terminal
66	ZEROBF2R	O+	SDOB2 Rch zero flag output terminal
67	ZEROBF2L	O+	SDOB2 Lch zero flag output terminal
68	OPORT0	O	General purpose output terminal (DASEL: Main ch DAC input select L:SDOA0/H:SDOB3)
69	OPORT1	O	General purpose output terminal (/RINH1: Recout 1 forbid L: forbid / H: permit)
70	OPORT2	O	General purpose output terminal (/RINH2: Recout 2 forbid L: forbid / H: permit)
71	OPORT3	O	General purpose output terminal (ICCDC: Codec Initial Clear L:Intial Clear)
72	OPORT4	O	General purpose output terminal (DFS: Codec select H: twice)
73	OPORT5	O	General purpose output terminal
74	OPORT6	O	General purpose output terminal
75	OPORT7	O	General purpose output terminal

No.	Name	I/O	Function
76	VSS	–	GND
77	VDD2	–	+2.5V power supply (for internal circuit)
78	RAMD0	I+/O	SubDSP: Data terminal 0 for external memory
79	RAMD1	I+/O	SubDSP: Data terminal 1 for external memory
80	RAMD2	I+/O	SubDSP: Data terminal 2 for external memory
81	RAMD3	I+/O	SubDSP: Data terminal 3 for external memory
82	ZEROBF1R	O+	SDOB1 Rch zero flag output terminal
83	ZEROBF1L	O+	SDOB1 Lch zero flag output terminal
84	ZEROBF0R	O+	SDOB0 Rch zero flag output terminal
85	ZEROBF0L	O+	SDOB0 Lch zero flag output terminal
86	RAMD4	I+/O	SubDSP: Data terminal 4 for external memory
87	RAMD5	I+/O	SubDSP: Data terminal 5 for external memory
88	RAMD6	I+/O	SubDSP: Data terminal 6 for external memory
89	RAMD7	I+/O	SubDSP: Data terminal 7 for external memory
90	VSS	–	GND
91	VDD1	–	+3.3V power supply (for terminal block)
92	RAMD8	I+/O	SubDSP: Data terminal 8 for external memory
93	RAMD9	I+/O	SubDSP: Data terminal 9 for external memory
94	RAMD10	I+/O	SubDSP: Data terminal 10 for external memory
95	RAMD11	I+/O	SubDSP: Data terminal 11 for external memory
96	RAMD12	I+/O	SubDSP: Data terminal 12 for external memory
97	RAMD13	I+/O	SubDSP: Data terminal 13 for external memory
98	RAMD14	I+/O	SubDSP: Data terminal 14 for external memory
99	RAMD15	I+/O	SubDSP: Data terminal 15 for external memory
100	CASN	O	SubDSP: Column address strobe output terminal for external DRAM
101	RAMWEN	O	SubDSP: Write enable output terminal for external memory
102	RAMOEN	O	SubDSP: Output enable output terminal for external memory
103	RASN	O	SubDSP: Low address strobe output terminal for external DRAM
104	VSS	–	GND
105	VDD1	–	+3.3V power supply (for terminal block)
106	RAMA8	O	SubDSP: Address terminal 8 for external memory
107	RAMA7	O	SubDSP: Address terminal 7 for external memory
108	RAMA0	O	SubDSP: Address terminal 0 for external memory
109	RAMA6	O	SubDSP: Address terminal 6 for external memory
110	RAMA1	O	SubDSP: Address terminal 1 for external memory
111	RAMA5	O	SubDSP: Address terminal 5 for external memory
112	RAMA2	O	SubDSP: Address terminal 2 for external memory
113	SELI13	I+	Built-in selector input 13
114	SELI12	I+	Built-in selector input 12
115	SELI11	I+	Built-in selector input 11
116	SELI10	I+	Built-in selector input 10
117	SELI9	I+	Built-in selector input 9
118	RAMA4	O	SubDSP: Address terminal 4 for external memory
119	RAMA3	O	SubDSP: Address terminal 3 for external memory
120	RAMA9	O	SubDSP: Address terminal 9 for external memory
121	RAMA10	O	SubDSP: Address terminal 10 for external memory
122	RAMA11	O	SubDSP: Address terminal 11 for external memory
123	VSS	–	GND
124	VDD2	–	+2.5V power supply (for internal circuit)
125	SELI8	I+	Built-in selector input 8
126	SELI7	I+	Built-in selector input 7
127	SELI6	I+	Built-in selector input 6
128	SELI5	I+	Built-in selector input 5
129	RAMA12	O	SubDSP: Address terminal 12 for external memory
130	RAMA13	O	SubDSP: Address terminal 13 for external memory
131	RAMA14	O	SubDSP: Address terminal 14 for external memory
132	RAMA15	O	SubDSP: Address terminal 15 for external memory
133	RAMA16	O	SubDSP: Address terminal 16 for external memory
134	RAMA17	O	SubDSP: Address terminal 17 for external memory
135	OVFB/END	O	SubDSP: Overflow / program end detect terminal
136	ZEROFLG	O	MainDSP: Zero flag output terminal
137	VSS	–	GND
138	NONPCM	O	Main DSP: non-PCM data detect terminal
139	DTSDATA	O	MainDSP: DTS data detect terminal
140	AC3DATA	O	MainDSP: AC-3 data detect terminal
141	MUTE	O	MainDSP: Auto mute detect terminal
142	KARAOKE	O	MainDSP: AC-3 Karaoke data detect terminal
143	VDD1	–	+3.3V power supply (for terminal block)
144	SURENC	O	MainDSP: AC-3 2/0 mode Dolby Surround Encode input detect terminal
145	CRC	O	MainDSP: AC-3 CRC error detect terminal
146	/LOCK	O	DIR: PLL lock detect terminal
147	DIRINT	O	DIR: Interrupt output terminal
148	/CS	Is	Microprocessor interface chip select input terminal
149	SO	Ot	Microprocessor interface data output terminal
150	SI	Is	Microprocessor interface data input terminal
151	SCK	Is	Microprocessor interface clock input terminal
152	/IC	Is	Initial clear input terminal
153	IPINT	O+	Output terminal for interrupt by IPORT8-14

No.	Name	I/O	Function
154	SELI4	I+	Built-in selector input 4
155	VSS	–	GND
156	SELI3	I+	Built-in selector input 3
157	SELI2	I+	Built-in selector input 2
158	TESTXI	I	Test terminal Must be connected with VSS.
159	TESTXO	O	Test terminal Unconnected.
160	VDD2	–	+2.5V power supply (for internal circuit)

Is: Schmidt trigger input terminal
I+: Input terminal with pull-up resistor
O: Digital output terminal
Ot: 3-state digital output terminal
A: Analog terminal

IC526 : M30802SGP
16bit μ-COM (Main CPU)

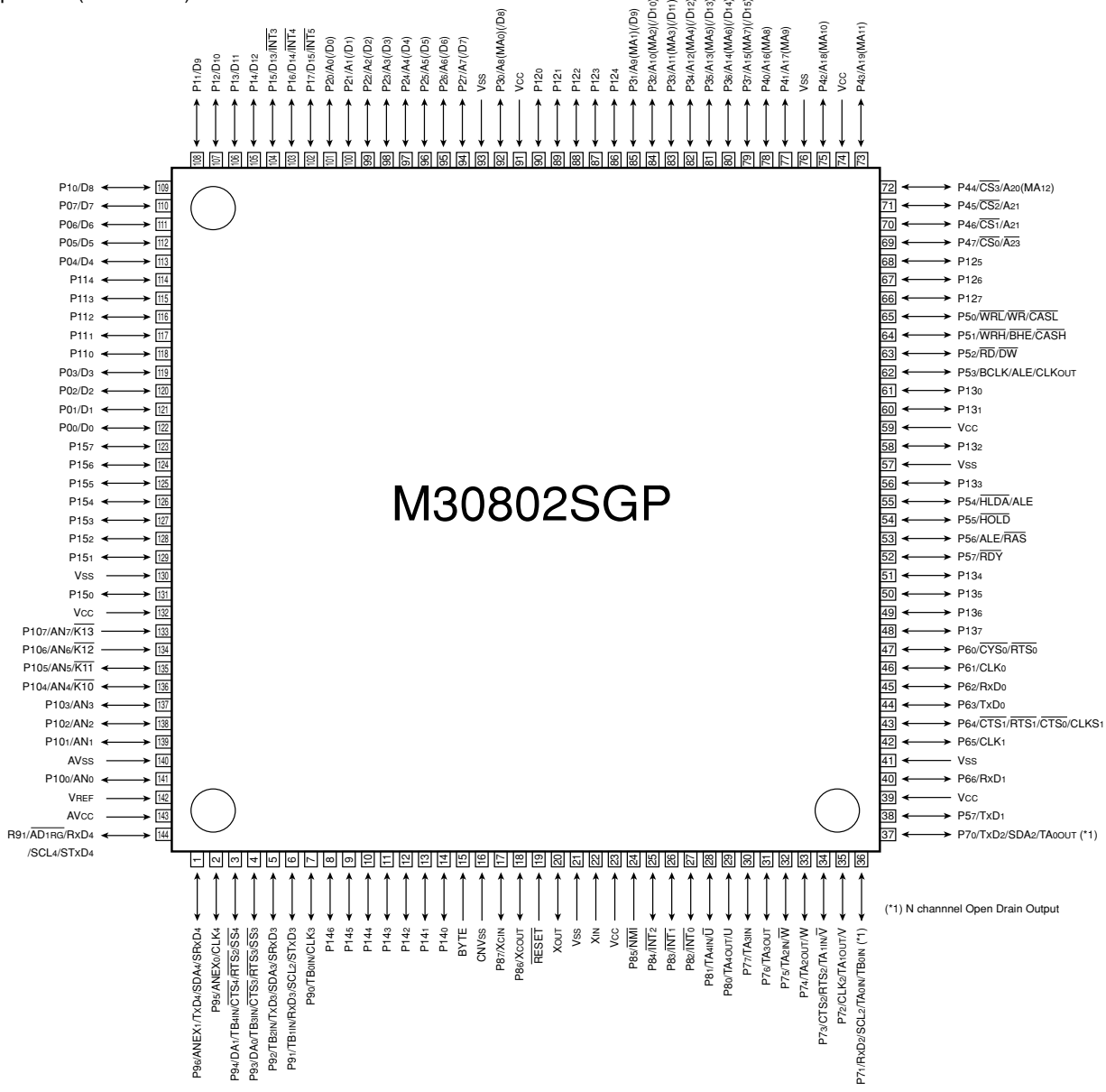

(*1) N channnel Open Drain Output

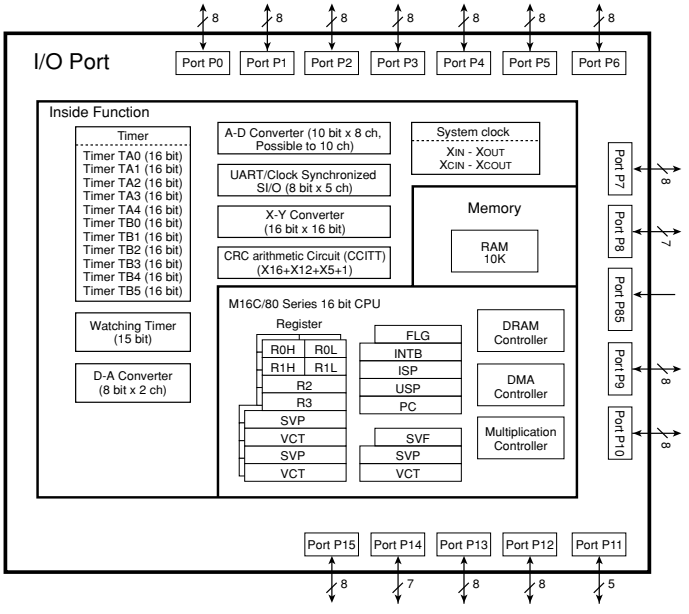

IC526 : M30802SGP
Pin Description

No.	Port No.	Function name	I/O	Detail of function	ON	OFF	BU
1	P96	TXDR	O	232C transmission data / Yokokawa data transmission	O	OL	OL
2	P95	RTS	I/O	232C RTS output / Yokokawa clock input	I/O	OL	OL
3	P94	CTS	I	232C CTS input	I	I	OL
4	P93	FAN	I	Fan control	I	I	OL
5	P92	SDTN	O	None audio serial transmission data (necessary port)	SO	OL	OL
6	P91	RXRDS	I	RDS received / Frequency switch (R version)	SI	I	OL
7	P90	SCKN	SCK	None audio serial clock	SCK	OL	OL
8	P146	E/I	O	Outside / inside synchronized output	O	OL	OL
9	P145	CEBU	O	BU2092CE or ZONE2	O	OL	OL
10	P144	/FLR	O	FL IC reset	O	OL	OL
11	P143	CEM0	O	FL1 enable	O	OL	OL
12	P142	CEM1	O	FL2 enable	O	OL	OL
13	P141	RDSE	O	RDS enable or RDS	O	OL	OL
14	P140	CES	O	Onscreen enable output / N/P format	O	OL	OL
15	BYTE	BYTE	VSS	Vss at 16 bit data	Vss	Vss	Vss
16	CNVss	CNVss	VCC	Vcc at microprocessor mode	Vcc	Vcc	Vcc
17	P87	MODEL	I	Model distinction	I	I	OL
18	P86	BOOT	I	Boot terminal for Yokokawa tool	I	I	OL
19	RESET	RESET	I	Reset	–	–	–
20	XOUT	XOUT	O	Oscillate output	–	–	–
21	VSS	VSS	VSS	Microcomputer ground	–	–	–
22	XIN	XIN	I	Oscillate input	–	–	–
23	VCC	VCC	I	Microcomputer power supply +5V	–	–	–
24	P85	NMI	I	Pullup by Vcc / 232C boot	–	–	–
25	P84	REM1	I	Remote control pulse input and LO edge interrupted	I	I	OL
26	P83	PEW	I	Power switch and HI edge interrupted	I	I	OL
27	P82	PDET	I	Power detect and LO edge interrupted	I	I	I
28	P81	VSY	I	Vertical synchronized detect	I	I	OL
29	P80	/ICD	O	IC YSS928 / DA / AD / CODEC / DEM	O	OL	OL
30	P77	RXDR	I	232C receive data (connect to pin 29)	I	I	OL
31	P76	/DMT	O	Digital full mute	O	OL	OL
32	P75	INT928	I	YSS928 IPINT / MUTE / DIR	I	I	OL
33	P74				O	OL	OL
34	P73	CEP	O	PLL IC enable	O	OL	OL
35	P72	SCKP	O	PLL IC clock	O	OL	OL
36	P71	RDTP	I	PLL IC receive data	I	I	OL
37	P70	SDTP	O	PLL IC transmission data (necessary PU)	O	OL	OL
38	P57	SDM	O	YSS928 transmission data	SO	OL	OL
39	VCC	VCC	VCC	Microcomputer power supply +5V			
40	P66	SDD	I	YSS928 receive data	SI	I	OL
41	VSS	VSS	VSS	Microcomputer ground			
42	P65	SCK	SCK	YSS928 clock	SCK	OL	OL
43	P64	/CSA	O	YSS928 CE	O	OL	OL
44	P63	CEC	O	CS3310 serial transmission data	SO	OL	OL
45	P62	CEC	O	CS3310 enable	O	OL	OL
46	P61	SCKC	SCK	CS3310 serial clock	SCK	OL	OL
47	P60	CSV	O	CS3310 power supply control	O	OL	OL
48	P137	/CSM	O	CS3310 reset	O	OL	OL
49	P136	VRB	I	Volume rotary B	I	I	OL
50	P135	VRA	I	Volume rotary A	I	I	OL
51	P134	PRI	I	Current protection	I	I	I
52	P57	RDY		Vcc			HI
53	P56			OPEN			HI
54	P55			Vcc			HI
55	P54			OPEN			HI
56	P133	/BEC	O	Bus extension control	O	OL	OL
57	VSS	VSS	VSS	Microcomputer ground			
58	P132	/Z2MT	O	Zone 2 mute	O	OL	OL
59	VCC	VCC	VCC	Microcomputer power supply +5V			
60	P131	/HPMT	O	Headphone mute	O	OL	OL
61	P130	/FMTF	O	MAIN -3dB	O	OL	OL
62	P53			OPEN			HI
63	P52			OE			HI
64	P51			OPEN			HI
65	P50			WE			HI
66	P127	/FMTS	O	Full mute SWL / SWR / SW MONO	O	OL	OL
67	P126	/FMTC	O	Full mute CENTER	O	OL	OL
68	P125	/FMTM	O	Full mute MAIN L / R, RL / RC / RR"	O	OL	OL
69	P47	A23		Ext. ROM Address Bus			Just before
70	P46	A22		Ext. ROM Address Bus			Just before
71	P45	A21		Ext. ROM Address Bus			Just before
72	P44	A20		Ext. ROM Address Bus			Just before
73	P43	A19		Ext. ROM Address Bus			Just before
74	VCC	VCC	VCC	Microcomputer power supply +5V			
75	P42	A18		Ext. ROM Address Bus			Just before

No.	Port No.	Function name	I/O	Detail of function	ON	OFF	BU
76	VSS	VSS	VSS	Microcomputer ground			
77	P41	A17		Ext. ROM Address Bus			Just before
78	P40	A16		Ext. ROM Address Bus			Just before
79	P37	A15		Ext. ROM Address Bus			Just before
80	P36	A14		Ext. ROM Address Bus			Just before
81	P35	A13		Ext. ROM Address Bus			Just before
82	P34	A12		Ext. ROM Address Bus			Just before
83	P33	A11		Ext. ROM Address Bus			Just before
84	P32	A10		Ext. ROM Address Bus			Just before
85	P31	A9		Ext. ROM Address Bus			Just before
86	P124	SCKA	O	Clock output for audio IC	O	OL	OL
87	P123	SDTA	O	Data output for audio IC	O	OL	OL
88	P122	CEL	O	Enable output for audio IC of sanyo	O	OL	OL
89	P121	RIMA	O	Power rimitter A	O	OL	OL
90	P120	RIMB	O	Power rimitter B	O	OL	OL
91	VCC	VCC	VCC	Microcomputer power supply +5V			
92	P30	A8		Ext. ROM Address Bus			Just before
93	VSS	VSS	VSS	Microcomputer ground			
94	P27	A7		Ext. ROM Address Bus			Just before
95	P26	A6		Ext. ROM Address Bus			Just before
96	P25	A5		Ext. ROM Address Bus			Just before
97	P24	A4		Ext. ROM Address Bus			Just before
98	P23	A3		Ext. ROM Address Bus			Just before
99	P22	A2		Ext. ROM Address Bus			Just before
100	P21	A1		Ext. ROM Address Bus			Just before
101	P20	A0		Ext. ROM Address Bus			Just before
102	P17	D15		Ext. ROM Data Bus			Just before
103	P16	D14		Ext. ROM Data Bus			Just before
104	P15	D13		Ext. ROM Data Bus			Just before
105	P14	D12		Ext. ROM Data Bus			Just before
106	P13	D11		Ext. ROM Data Bus			Just before
107	P12	D10		Ext. ROM Data Bus			Just before
108	P11	D9		Ext. ROM Data Bus			Just before
109	P10	D8		Ext. ROM Data Bus			Just before
110	P07	D7		Ext. ROM Data Bus			Just before
111	P06	D6		Ext. ROM Data Bus			Just before
112	P05	D5		Ext. ROM Data Bus			Just before
113	P04	D4		Ext. ROM Data Bus			Just before
114	P114	/MLV	O	Main level	O	OL	OL
115	P113	PRY	O	Power relay	O	OL	OL
116	P112	SPE	O	Speaker relay at effect	O	OL	OL
117	P111	SPB	O	Speaker relay at main B	O	OL	OL
118	P110	SPA	O	Speaker relay at main A	O	OL	OL
119	P03	D3		Ext. ROM Data Bus			Just before
120	P02	D2		Ext. ROM Data Bus			Just before
121	P01	D1		Ext. ROM Data Bus			Just before
122	P00	D0		Ext. ROM Data Bus			Just before
123	P157	TUN0	I	Tuner step 0	I	I	OL
124	P156	TUN1	I	Tuner step 1	I	I	OL
125	P155	ISA/BSW	I	BASS EXT switch	I	I	OL
126	P154	ISB/PSW	I	PR.DIRECT switch	I	I	OL
127	P153	/HP	I	Headphone detect	I	I	OL
128	P152	TMT	O	Tuner mute	O	OL	OL
129	P151	/TUNED	I	Tuner meter	I	I	OL
130	VSS	VSS	VSS	Microcomputer ground			
131	P150	/ST	I	Tuner stereo	I	I	OL
132	VCC	VCC	VCC	Microcomputer power supply +5V			
133	P107	RMV	I	Power rimitter for model distinction	I	I	I
134	P106	REC	I	REC OUT selector	I	I	I
135	P105	PREMT	I	Power rimitter detect	I	I	I
136	P104	ADKEY1	I	Key tact switch 1	I	I	I
137	P103	ADKEY0	I	Key tact switch 0	I	I	I
138	P102	AN2	I	Temperature detect	I	I	I
139	P101	AN1	I	Power amplifier DC protection	I	I	I
140	AVSS	VSS	VSS	AD ground	VSS	VSS	VSS
141	P100	AN0	I	Power supply protection	I	I	I
142	VREF	VREF	VCC	AD reference	VCC	VCC	VCC
143	AVCC	AVCC	VCC	AD power supply	VCC	VCC	VCC
144	P91	RXDR	I	232C receive data / Yokokawa data receive	I	I	OL

Voltage	0.0	0.5	1.0	1.5	2.0	2.5	3.0	3.5	4.0	4.5
KEY0	PRESET ▶	PRESET ◀	PRESET/EDIT	FM/AM	MEMORY	TUNING MODE	RDS MODE	EON	PTY SEEK MODE	PTY SEEK START
KEY1	6CH INPUT	INPUT ▶	INPUT ◀	INPUT MODE	SPA	SPB	EFFECT	PROGRAM ▶	PROGRAM ◀	A/B/C/D/E

■ BLOCK DIAGRAM (1/2)

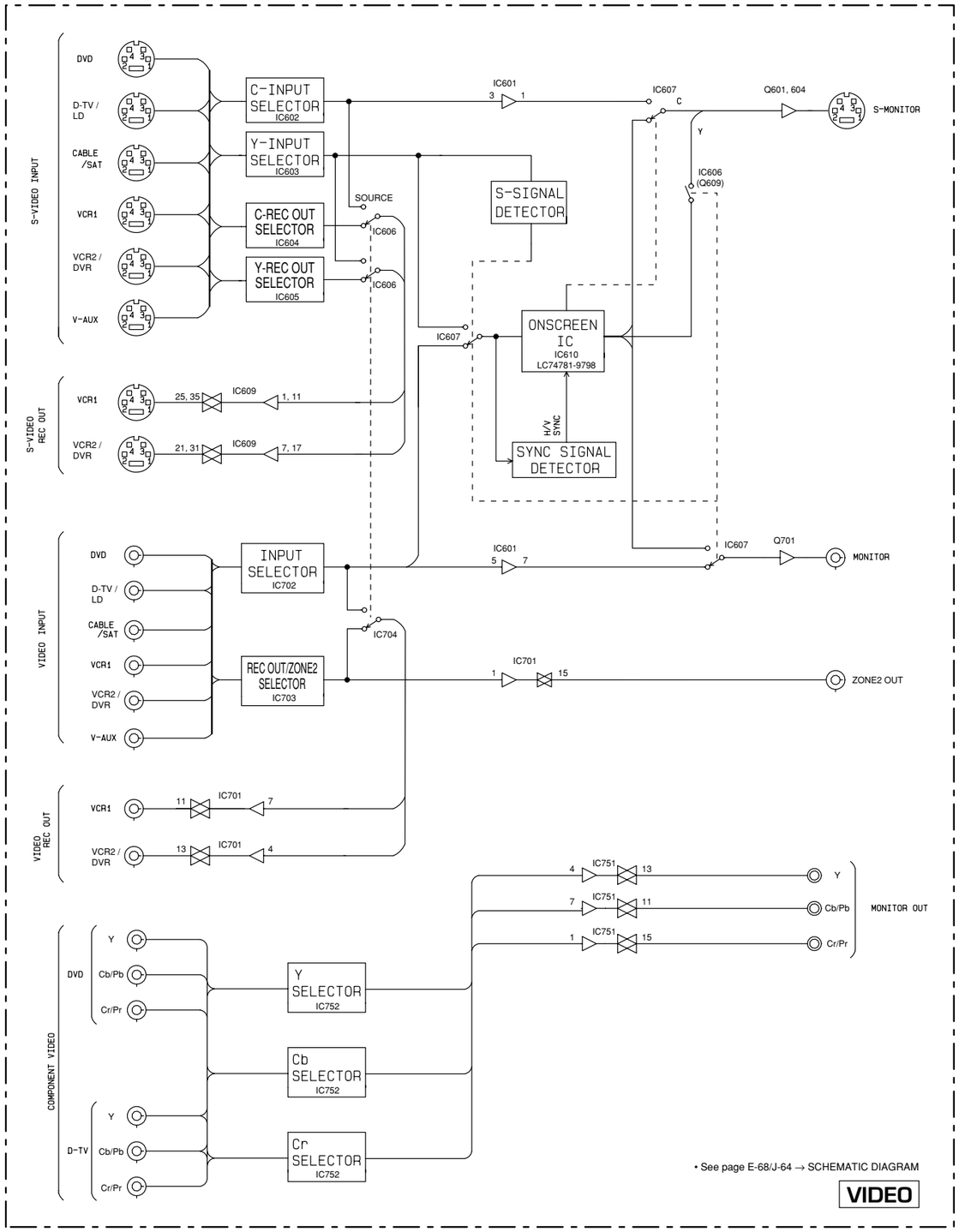

• See page E-68/J-64 → SCHEMATIC DIAGRAM

VIDEO

■ BLOCK DIAGRAM (2/2)

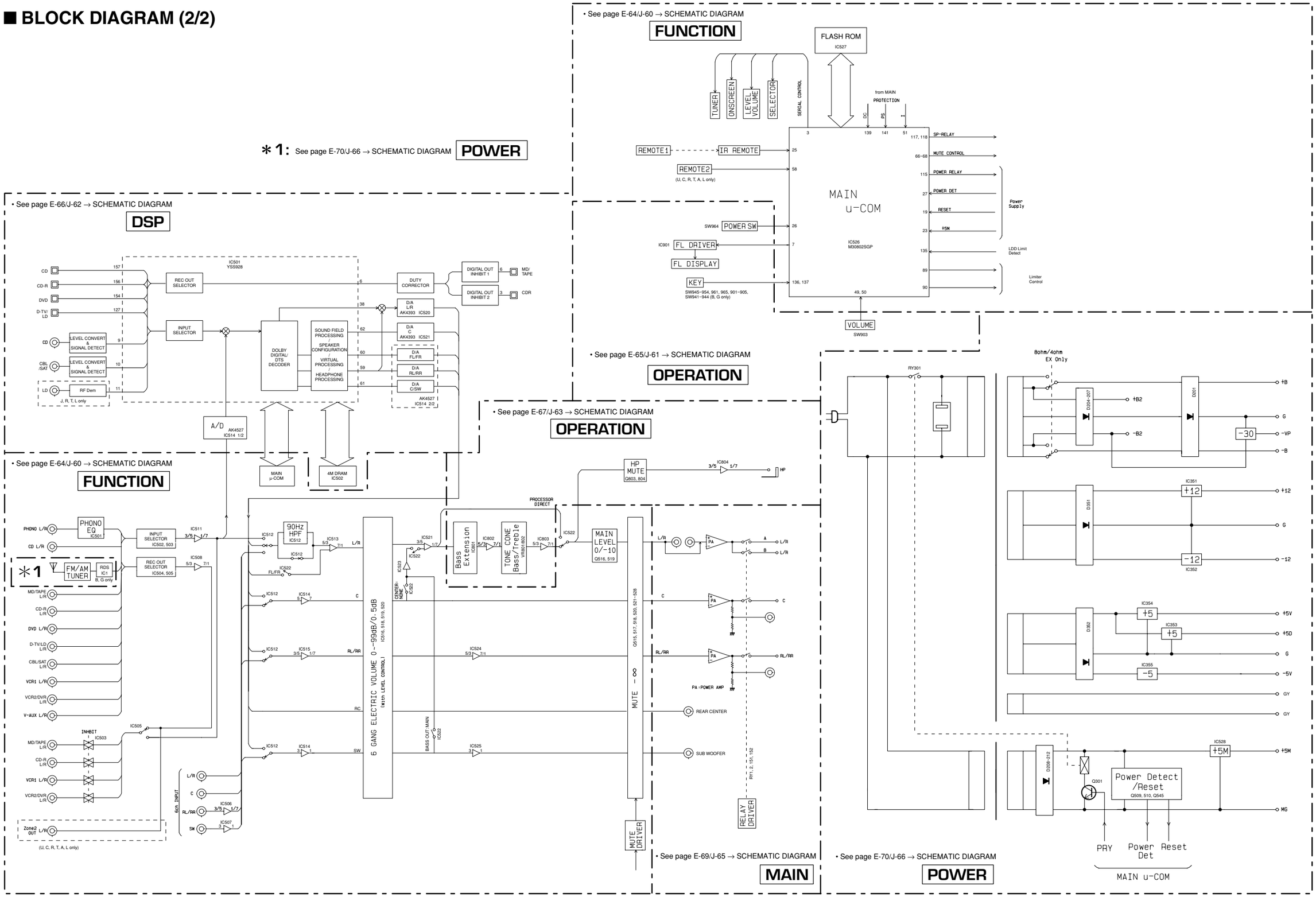

■ PRINTED CIRCUIT BOARD (Foil side)

FUNCTION P. C. B.

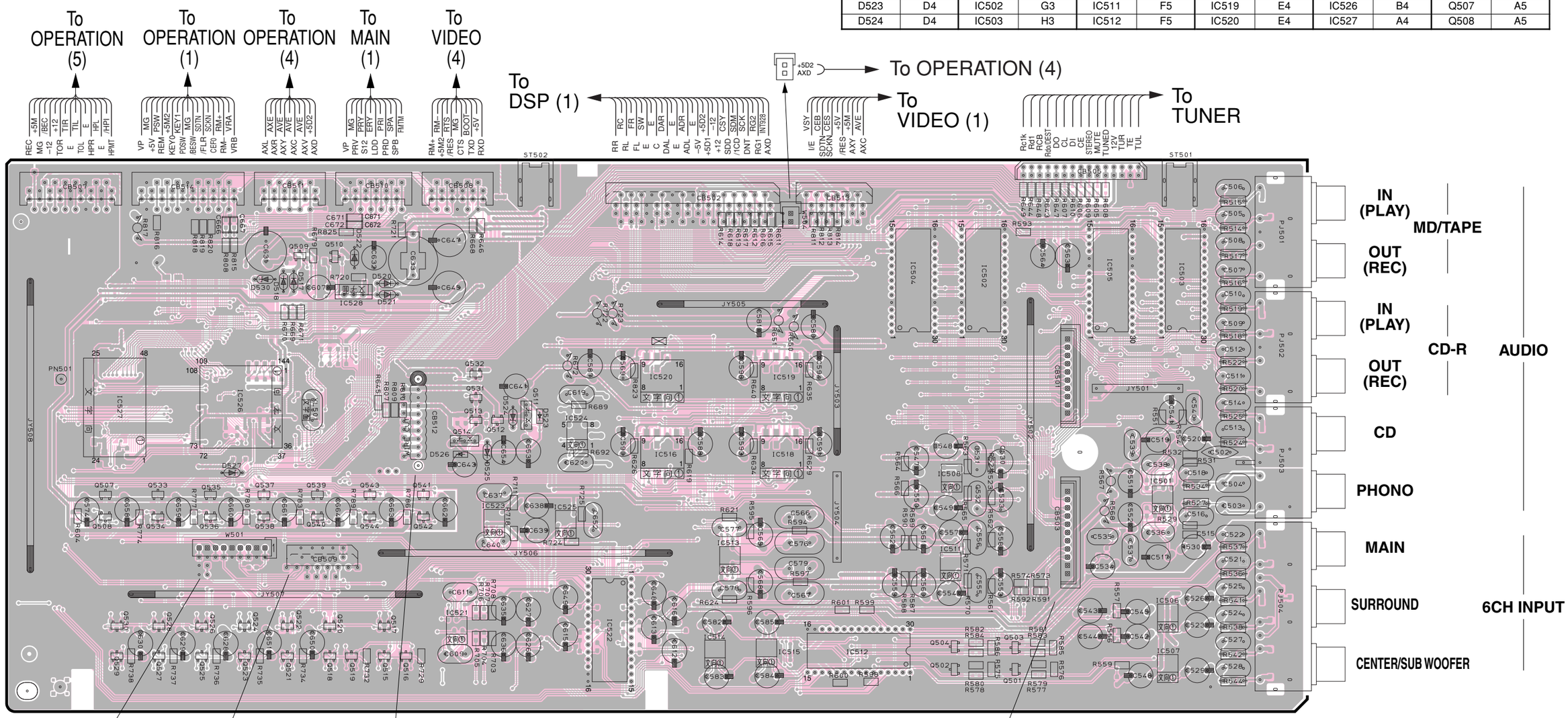

• **Semiconductor Location**

Ref. No.	Location	Ref. No.	Location	Ref. No.	Location	Ref. No.	Location	Ref. No.	Location	Ref. No.	Location
D517	B3	D525	D4	IC504	F3	IC513	E5	IC521	C5	IC528	C3
D518	B3	D526	C4	IC505	G3	IC514	E5	IC522	D5	Q501	G6
D520	C3	D527	B5	IC506	H5	IC515	E5	IC523	D5	Q502	F6
D521	C3	D530	B3	IC507	H6	IC516	E4	IC524	D4	Q503	G5
D522	C3	IC501	H5	IC508	F4	IC518	E4	IC525	D5	Q504	F5
D523	D4	IC502	G3	IC511	F5	IC519	E4	IC526	B4	Q507	A5
D524	D4	IC503	H3	IC512	F5	IC520	E4	IC527	A4	Q508	A5

Circuit No.	J	U, C	R, T	A, L	B, G
C503, 504, 675	X	X	X	O	O
C548, 549, 574	X	O	O	O	X
C670~674	X	O	X	X	X
Q505~508	X	O	O	O	X
R560	O	X	X	O	O
R561	O	O	X	X	X
R563, 565, 573, 574, 591, 592, 603, 604, 641,677	X	O	O	O	X
R593, 673	X	X	O	X	X
R676	X	X	X	X	O
R696	O	O	O	X	X
R698	O	O	O	O	X
R699	O	X	X	X	O

X: NOT USED
O: USED / APPLICABLE

• **Semiconductor Location**

Ref. No.	Location	Ref. No.	Location	Ref. No.	Location	Ref. No.	Location
Q509	B3	Q519	C6	Q529	A6	Q539	C5
Q510	C3	Q520	C5	Q530	A5	Q540	C5
Q511	D4	Q521	B6	Q531	C4	Q541	C5
Q512	D4	Q522	B5	Q532	C4	Q542	C5
Q513	C4	Q523	B6	Q533	B5	Q543	C5
Q514	C4	Q524	B5	Q534	B5	Q544	C5
Q515	C6	Q525	B6	Q535	B5		
Q516	C6	Q526	B5	Q536	B5		
Q517	C5	Q527	B6	Q537	B5		
Q518	C6	Q528	B5	Q538	B5		

■ PRINTED CIRCUIT BOARD (Foil side)

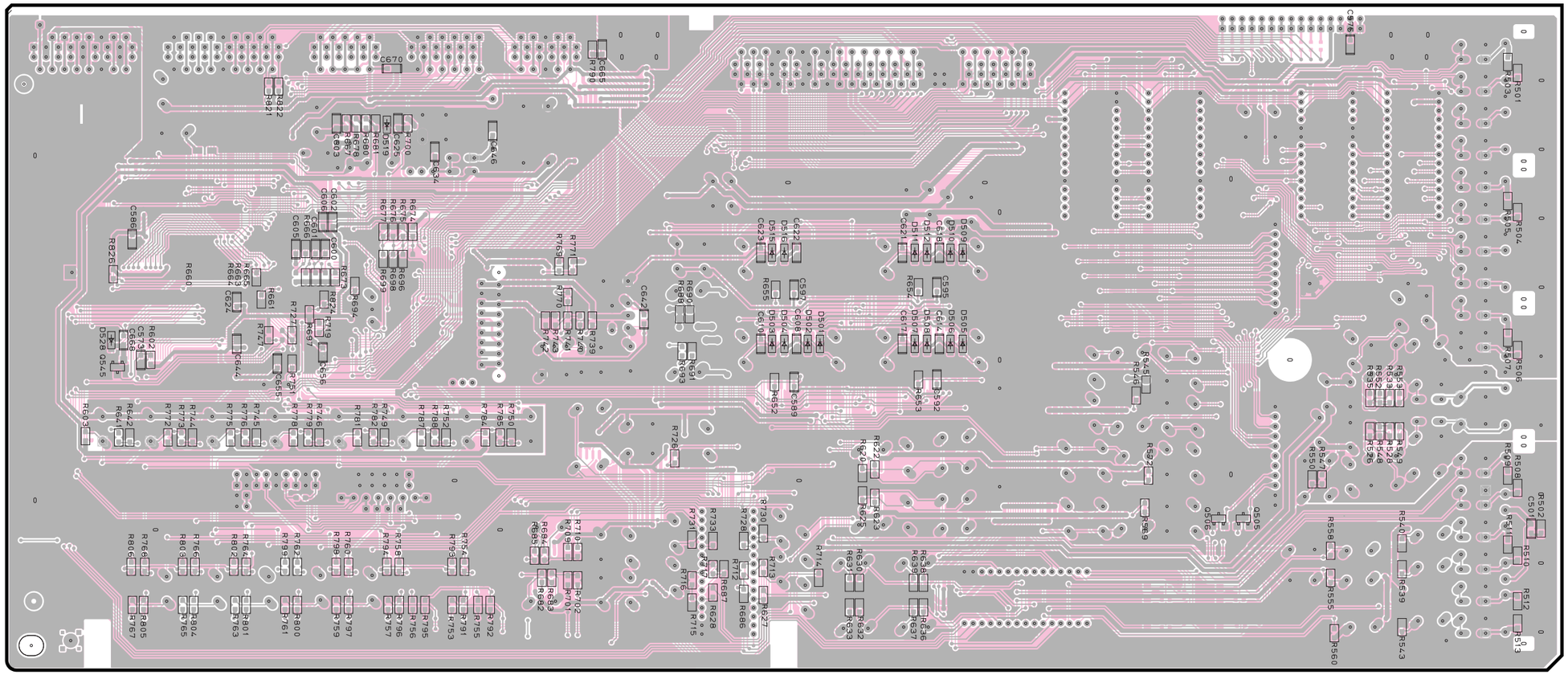

• **Semiconductor Location**

Ref. No.	Location
D501	E4
D502	E4
D503	E4
D504	E4
D505	F4
D506	F4
D507	E4
D508	E4
D509	F3
D510	F3
D511	E3
D512	E3
D515	E3
D516	E3
D519	C3
D528	A4
Q505	G5
Q506	G5
Q545	A4

■ PRINTED CIRCUIT BOARD (Foil side)

OPERATION (1) P. C. B.

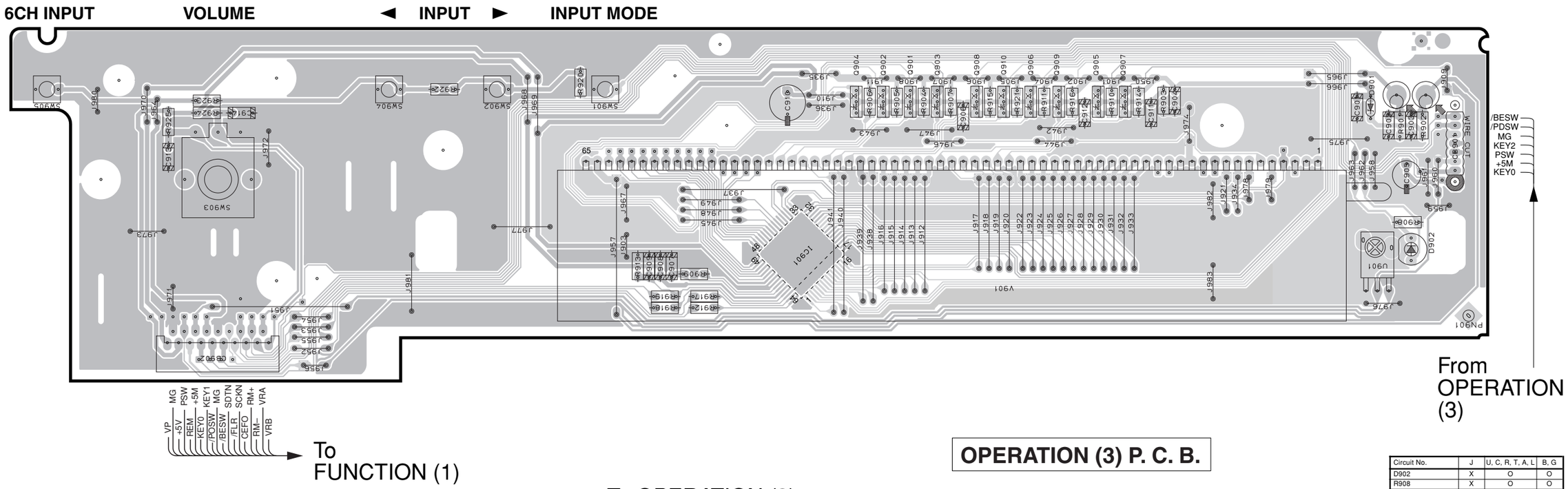

OPERATION (2) P. C. B.

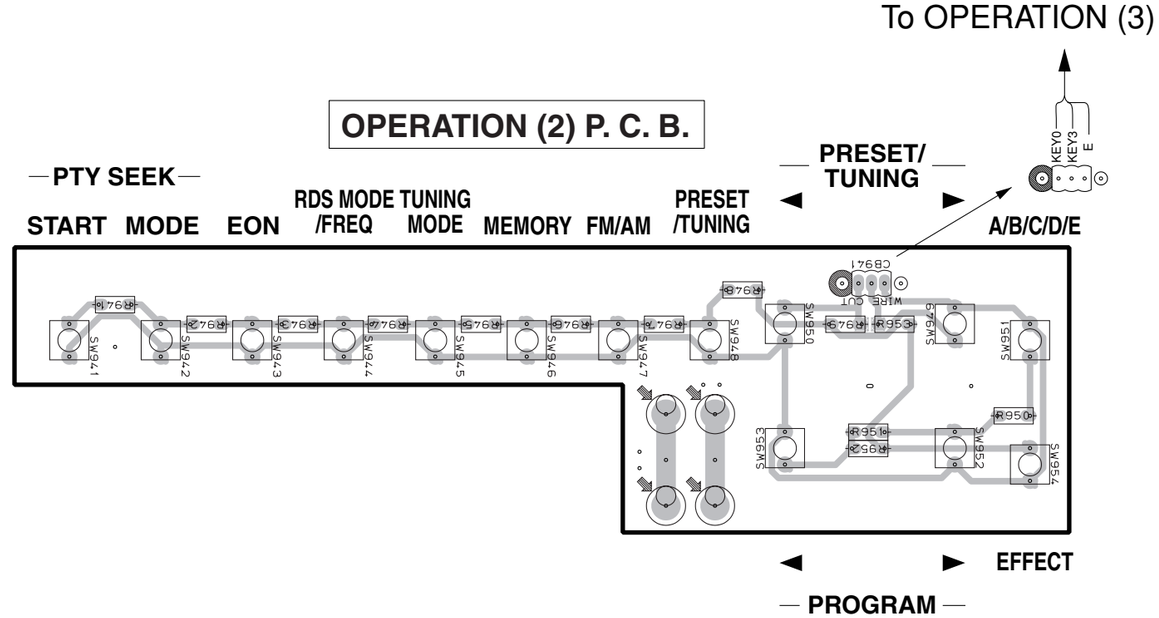

OPERATION (3) P. C. B.

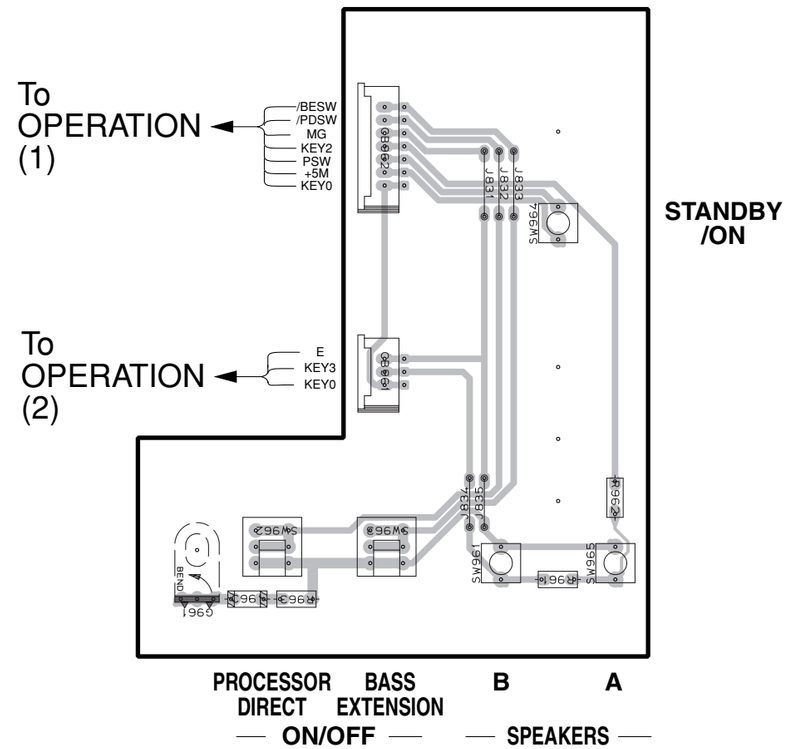

Circuit No.	J	U, C, R, T, A, L	B, G
D902	X	O	O
R908	X	O	O
R941~944	X	X	O
SW941~944	X	X	O

X: NOT USED
O: USED / APPLICABLE

• **Semiconductor Location**

Ref. No.	Location
D901	I2
D902	I3
IC901	E3
Q901	F2
Q902	F2
Q903	F2
Q904	F2
Q905	G2
Q906	G2
Q907	G2
Q908	F2
Q909	G2
Q910	F2

■ PRINTED CIRCUIT BOARD (Foil side)

OPERATION (4) P. C. B.

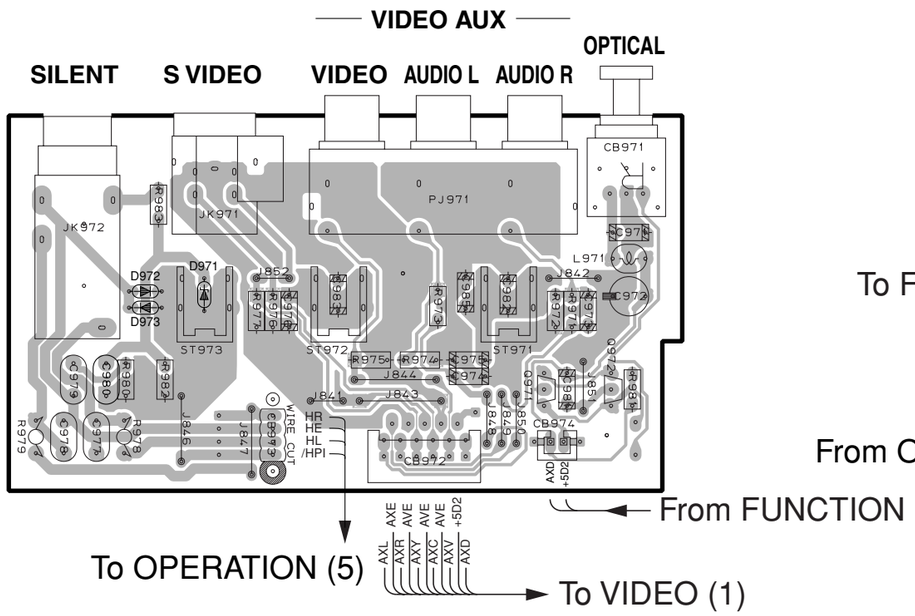

OPERATION (5) P. C. B.

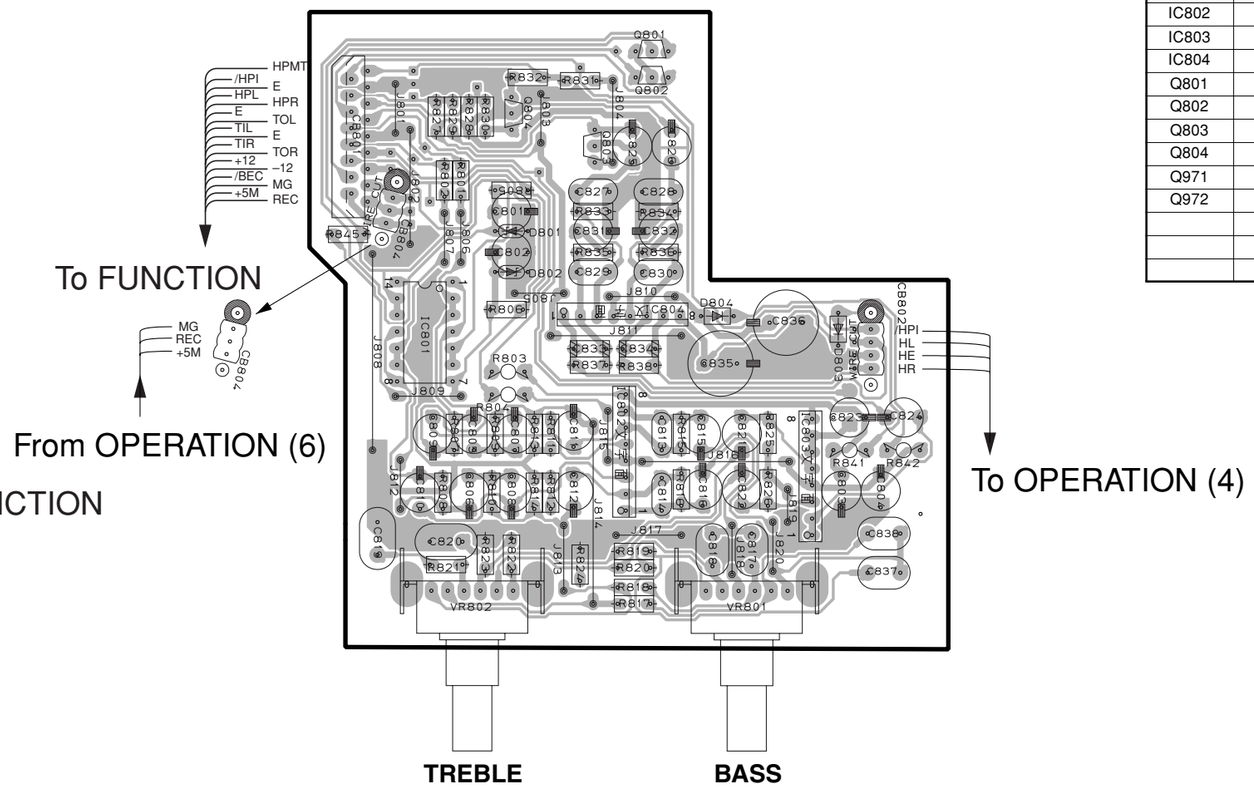

OPERATION (6) P. C. B.

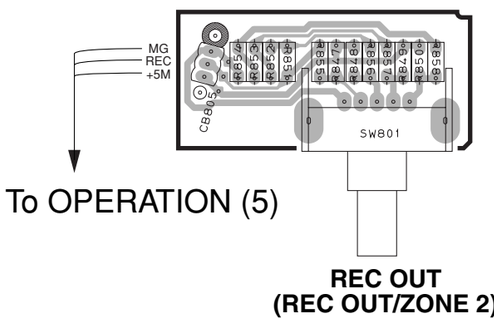

• Semiconductor Location

Ref. No.	Location
D801	F3
D802	F3
D803	G3
D804	G3
IC801	F3
IC802	F3
IC803	G4
IC804	F3
Q801	G2
Q802	G2
Q803	F2
Q804	F2
Q971	C3
Q972	D3

■ PRINTED CIRCUIT BOARD (Foil side)

DSP P. C. B.

Circuit No.	J,R, T, L	U, C,	A, B, G
C594, 596, 661, 663, 665, 686, 717, 719, 721	O	X	O
R564, 711	X	O	O

X: NOT USED
O: USED / APPLICABLE

• Semiconductor Location

Ref. No.	Location
D501	F6
D502	F5
D503	F5
D504	F5
D505	F5
D506	F5
D507	F5
D509	F4
D511	F6
D512	F3
D513	F3
D527	C5
D528	C5
D529	C5
D531	C5
IC501	E5
IC502	E4
IC503	E6
IC504	D6
IC505	F4
IC506	F3
IC509	F6
IC512	F6
IC513	D4
IC514	C6
IC520	D4
IC521	C5
IC523	B4
Q506	F6
Q507	F7

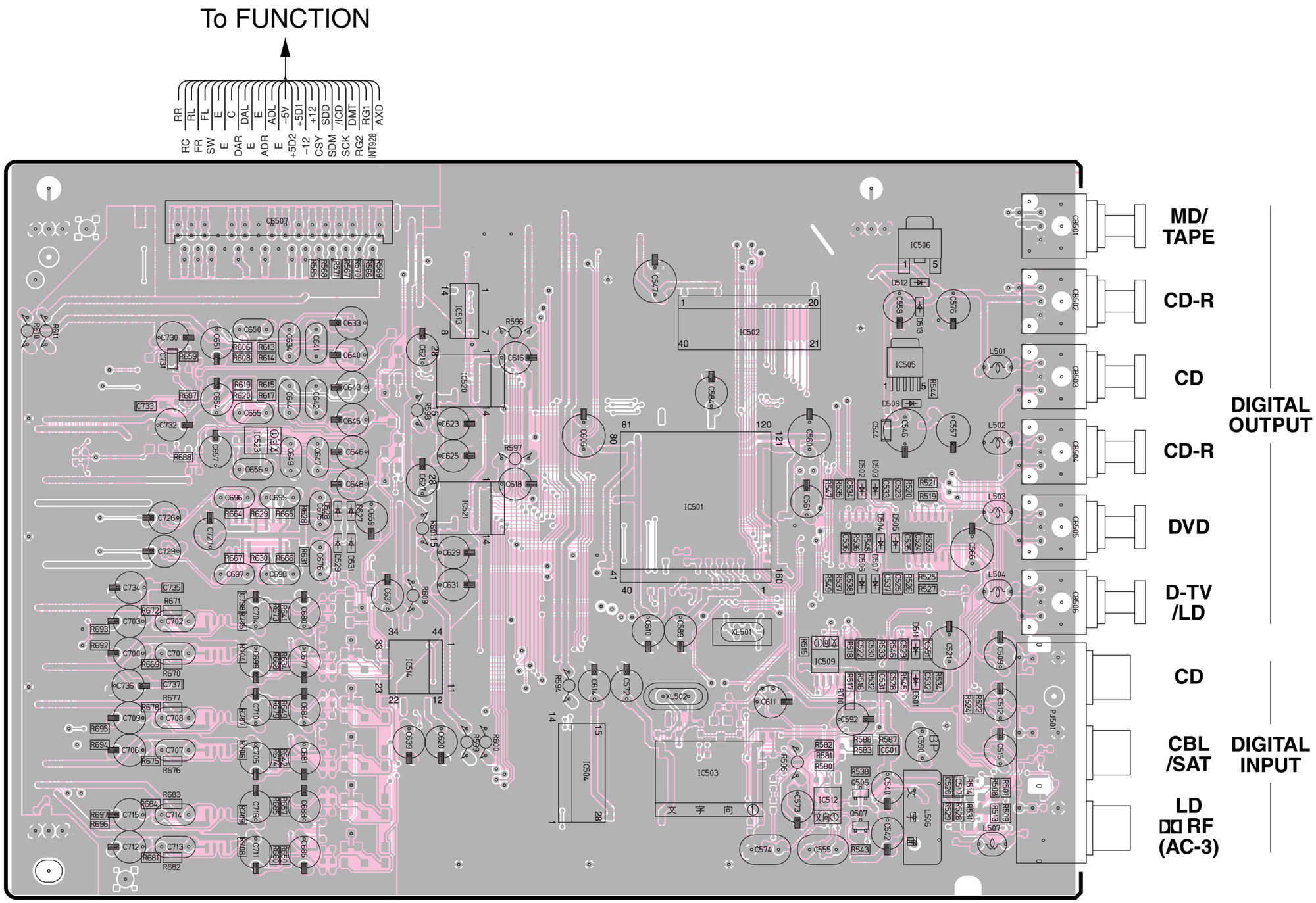

■ PRINTED CIRCUIT BOARD (Foil side)

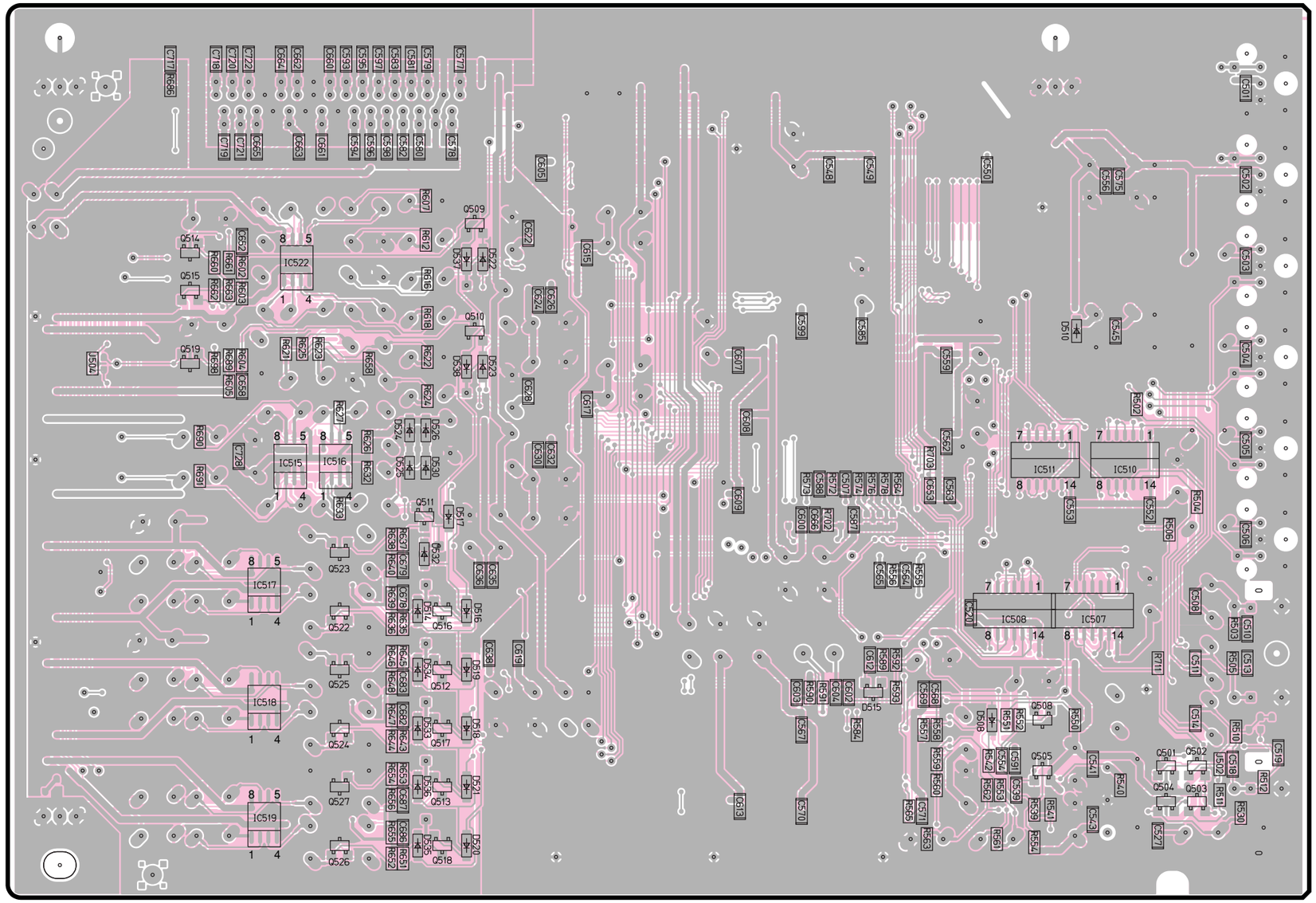

• **Semiconductor Location**

Ref. No.	Location
D508	F6
D510	F4
D514	C6
D515	E6
D516	C6
D517	C5
D518	C6
D519	C6
D520	C7
D521	C7
D522	C4
D523	C4
D524	C5
D525	C5
D526	C5
D530	C5
D532	C5
D533	C6
D534	C6
D535	C7
D536	C7
D537	C4
D538	C4
IC507	F6
IC508	F6
IC510	F5
IC511	F5
IC515	B5
IC516	B5
IC517	B5
IC518	B6
IC519	B7
IC522	B4
Q501	G6
Q502	G6
Q503	G7
Q504	G7
Q505	F6
Q508	F6
Q509	C4
Q510	C4
Q511	C5
Q512	C6
Q513	C7
Q514	B4
Q515	B4
Q516	C6
Q517	C6
Q518	C7
Q519	B4
Q522	B6
Q523	B5
Q524	B6
Q525	B6
Q526	B7
Q527	B7

■ PRINTED CIRCUIT BOARD (Foil side)

VIDEO (1) P. C. B.

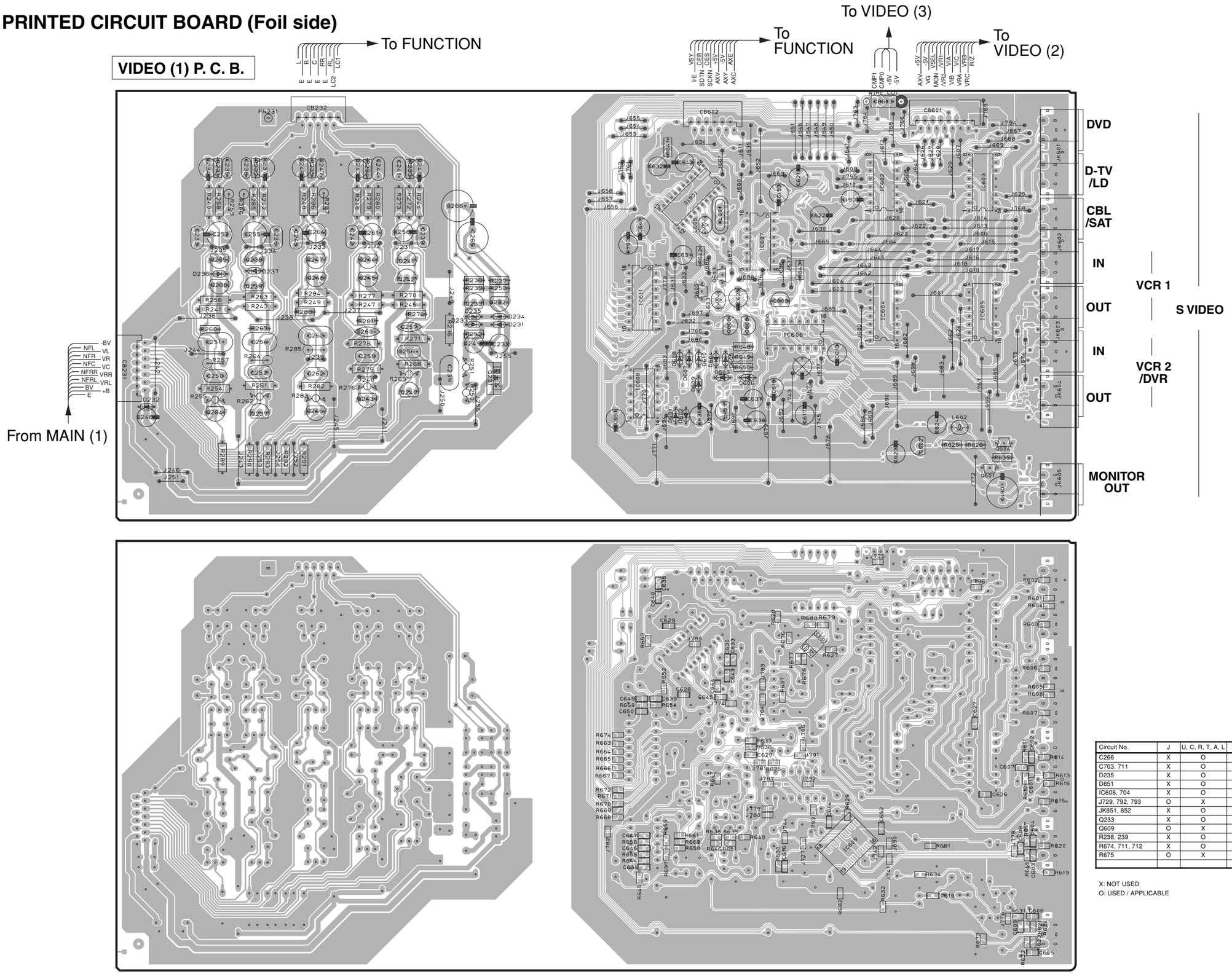

• Semiconductor Location

Ref. No.	Location
D231	D3
D232	B4
D233	D3
D234	D3
D235	D3
D236	B3
D237	C3
D601	E4
D602	E4
D603	E3
D604	E3
D605	E3
D606	F3
D607	E3
D608	E3
D609	E3
D610	E3
IC601	F5
IC602	G2
IC603	G2
IC604	G3
IC605	G3
IC606	F3
IC607	F2
IC608	E3
IC609	F6
IC610	E2
IC611	E3
Q231	D3
Q232	D3
Q233	D3
Q234	B4
Q235	B3
Q236	B3
Q237	C4
Q238	C3
Q239	C3
Q240	C3
Q241	C3
Q242	C3
Q243	C3
Q244	C3
Q245	C3
Q246	C4
Q247	C3
Q248	C3
Q601	G4
Q602	G4
Q603	E3
Q604	G4
Q605	E3
Q606	E3
Q607	F3
Q608	F3
Q609	F3

Circuit No.	J	U, C, R, T, A, L	B, G
C266	X	O	
C703, 711	X	O	X
D235	X	O	O
D851	X	O	X
IC606, 704	X	O	X
J729, 792, 793	O	X	O
JK851, 852	X	O	X
Q233	X	O	O
Q609	O	X	O
R238, 239	X	O	O
R674, 711, 712	X	O	X
R675	O	X	O

X: NOT USED
O: USED / APPLICABLE

■ PRINTED CIRCUIT BOARD (Foil side)

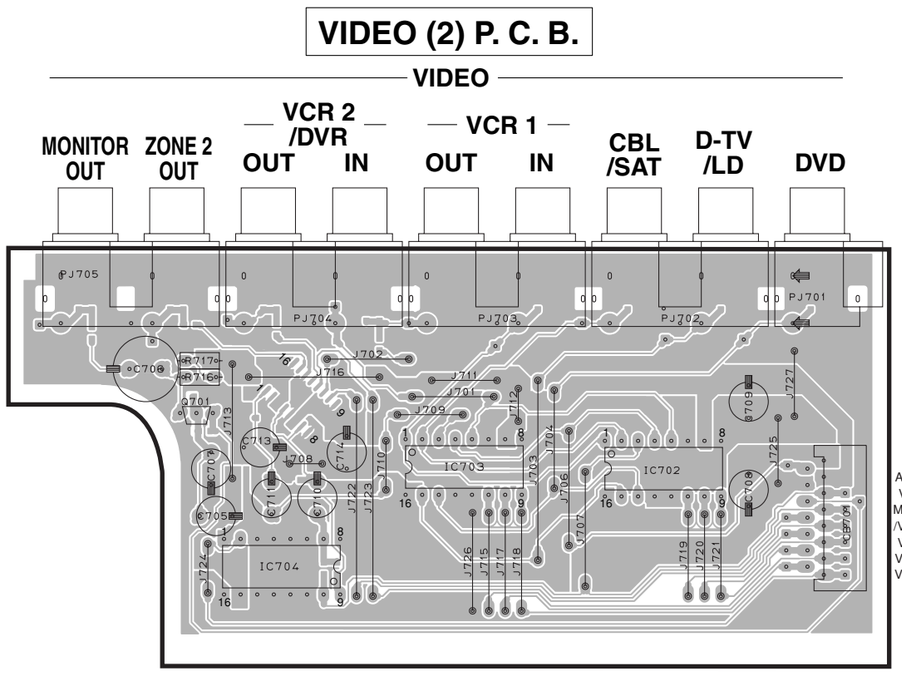

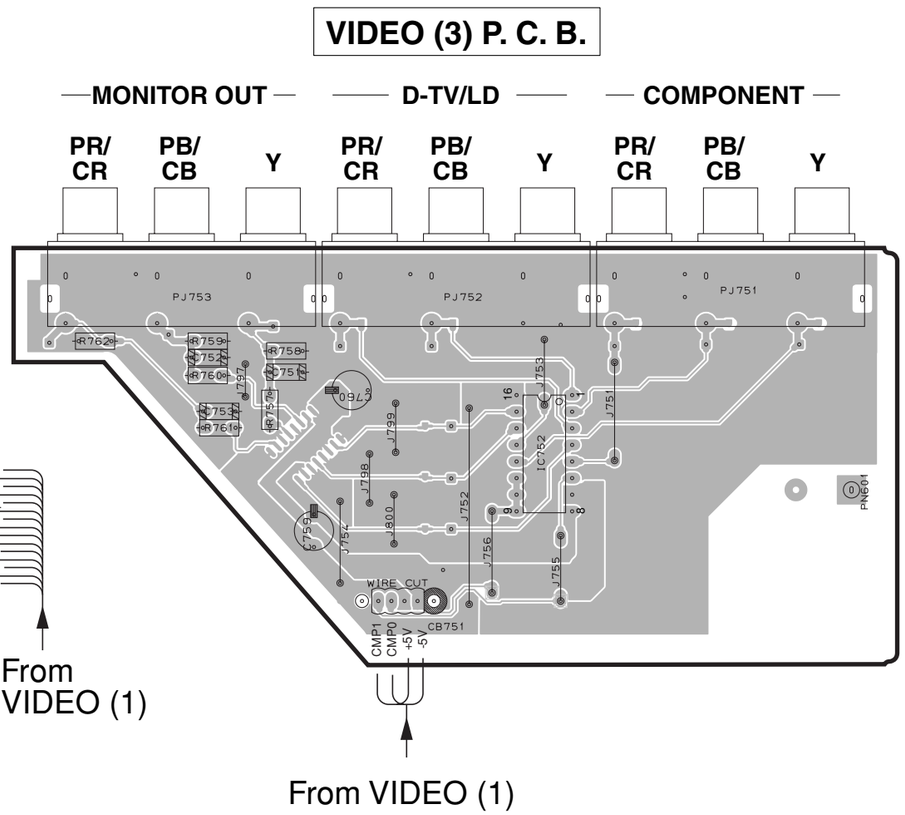

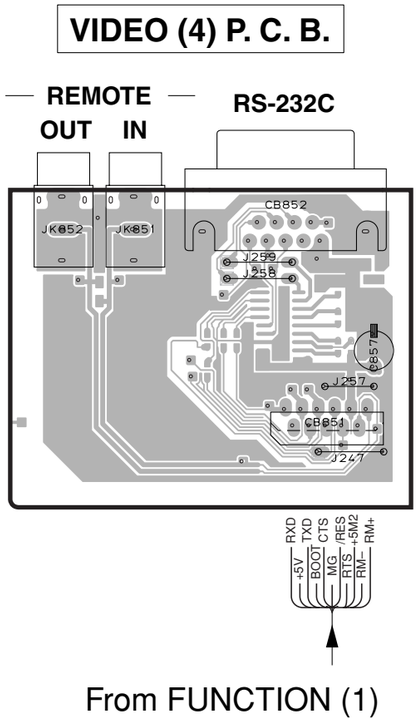

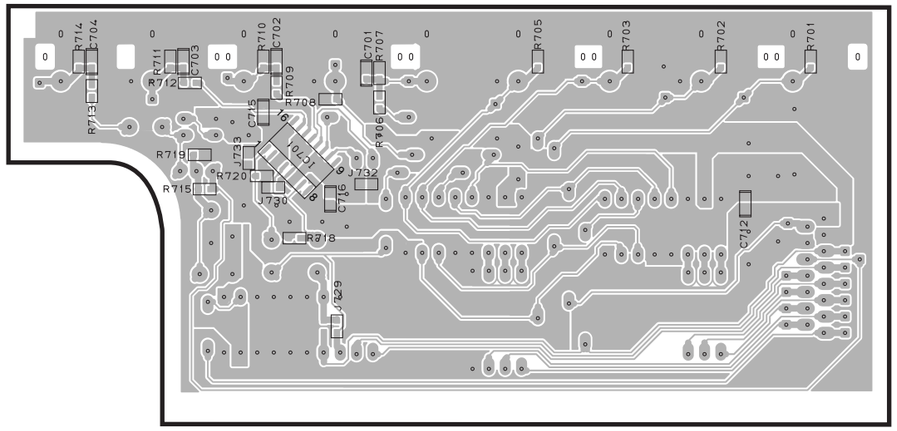

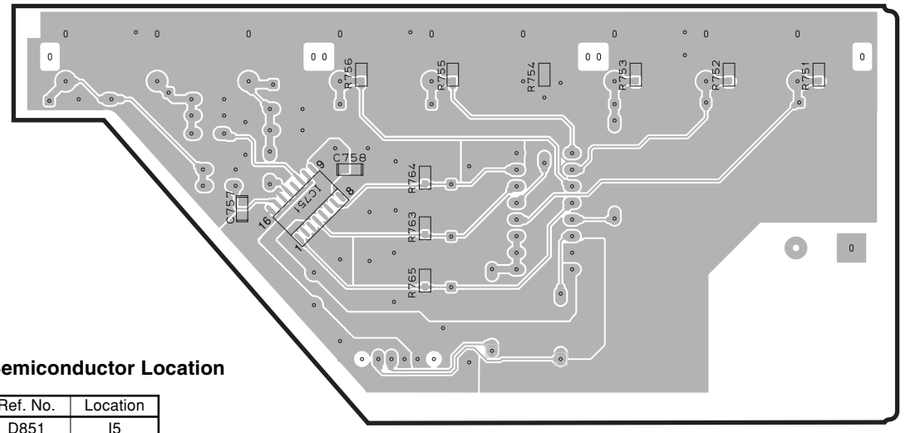

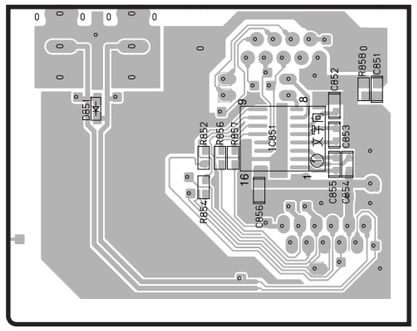

• **Semiconductor Location**

Ref. No.	Location
D851	I5
IC701	B5
IC702	C3
IC703	C3
IC704	B4
IC751	F6
IC752	G3
IC851	I5
Q701	B3

■ PRINTED CIRCUIT BOARD (Foil side)

Circuit No.	J	U, C	R, T	A, B, G, L
C38~40	X	X	O	O
C41~49, 151~156	X	X	O	O
C205, 212, 213	X	X	O	X
D202, 203, 208	X	X	O	X
J201	O	O	X	O
J202, 203	O	X	X	X
Q201~203	X	X	O	X
R134~135	X	X	O	O
R201, 202, 208	X	X	O	X
SW201	X	O	O	O

X: NOT USED
O: USED / APPLICABLE

• Semiconductor Location

Ref. No.	Location	Ref. No.	Location	Ref. No.	Location
D1	F5	D21	I6	Q13	G4
D2	G6	D22	F5	Q14	G4
D3	G6	D23	E5	Q15	H4
D4	D5	D24	C5	Q16	H4
D5	C5	D25	D6	Q17	F4
D6	G5	D26	E6	Q18	F4
D7	H5	D27	E6	Q19	E4
D8	E5	D28	E6	Q20	E5
D9	D5	Q1	E4	Q22	D4
D10	H5	Q2	D4	Q23	D5
D11	I5	Q3	G4	Q25	G4
D12	F5	Q4	H4	Q26	H5
D13	F6	Q5	F4	Q28	H4
D14	F6	Q6	F6	Q29	I5
D15	H6	Q7	F6	Q31	F4
D16	F6	Q8	G6	Q32	G5
D17	H6	Q9	E4	Q34	F6
D18	B3	Q10	D4	Q35	G5
D19	B3	Q11	C4	Q36	H6
D20	B3	Q12	C4	Q37	F6

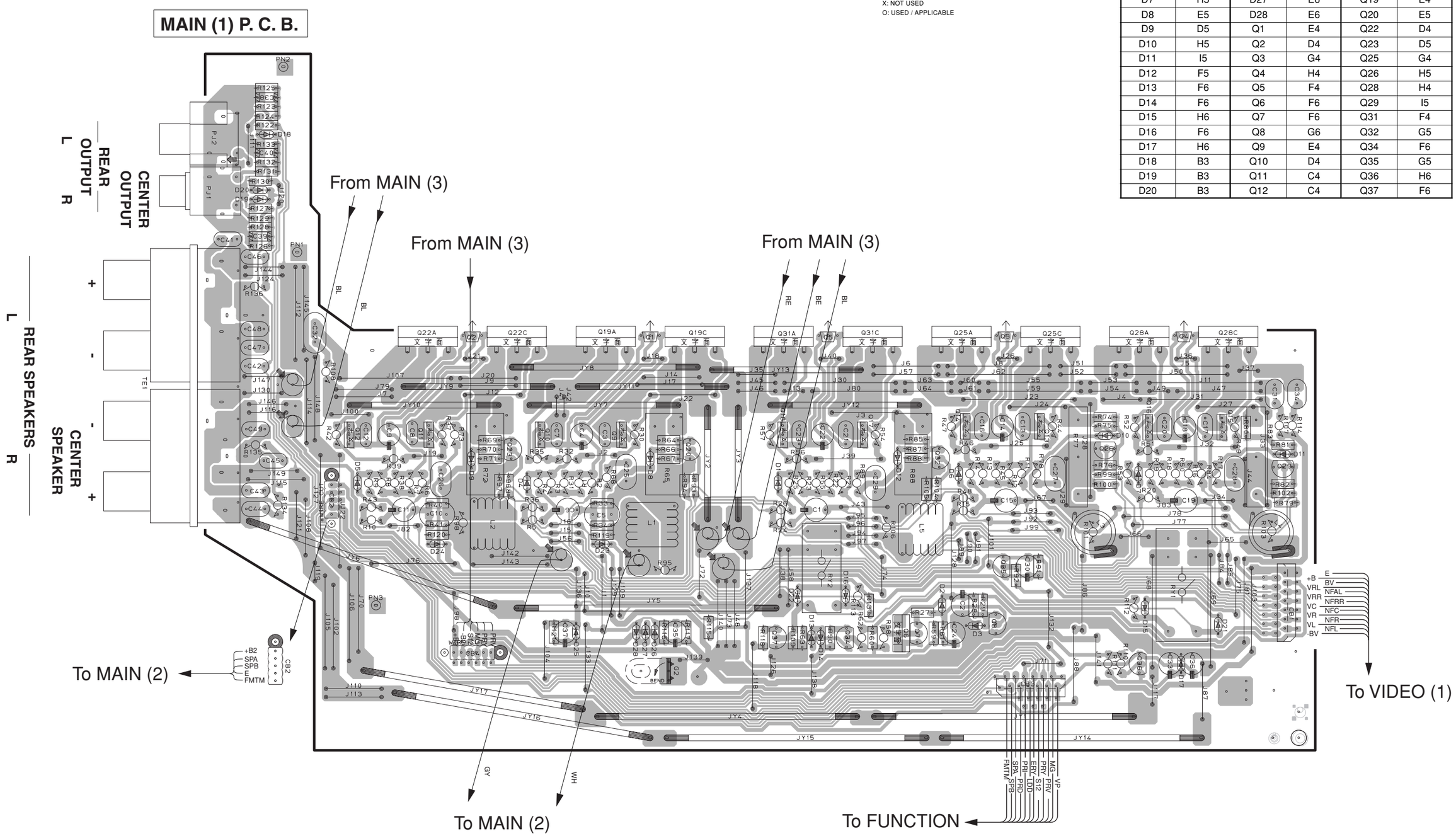

■ PRINTED CIRCUIT BOARD (Foil side)

• **Semiconductor Location**

Ref. No.	Location
D151	B4
D152	B4
D153	B4
D154	B4
D201	E3
D202	F2
D203	F2
D204	F3
D205	F3
D206	F3
D207	F3
D208	F2
D209	G2
D210	G2
D211	G2
D212	G2
Q151	B4
Q154	B4
Q201	G2
Q202	F2
Q203	F2

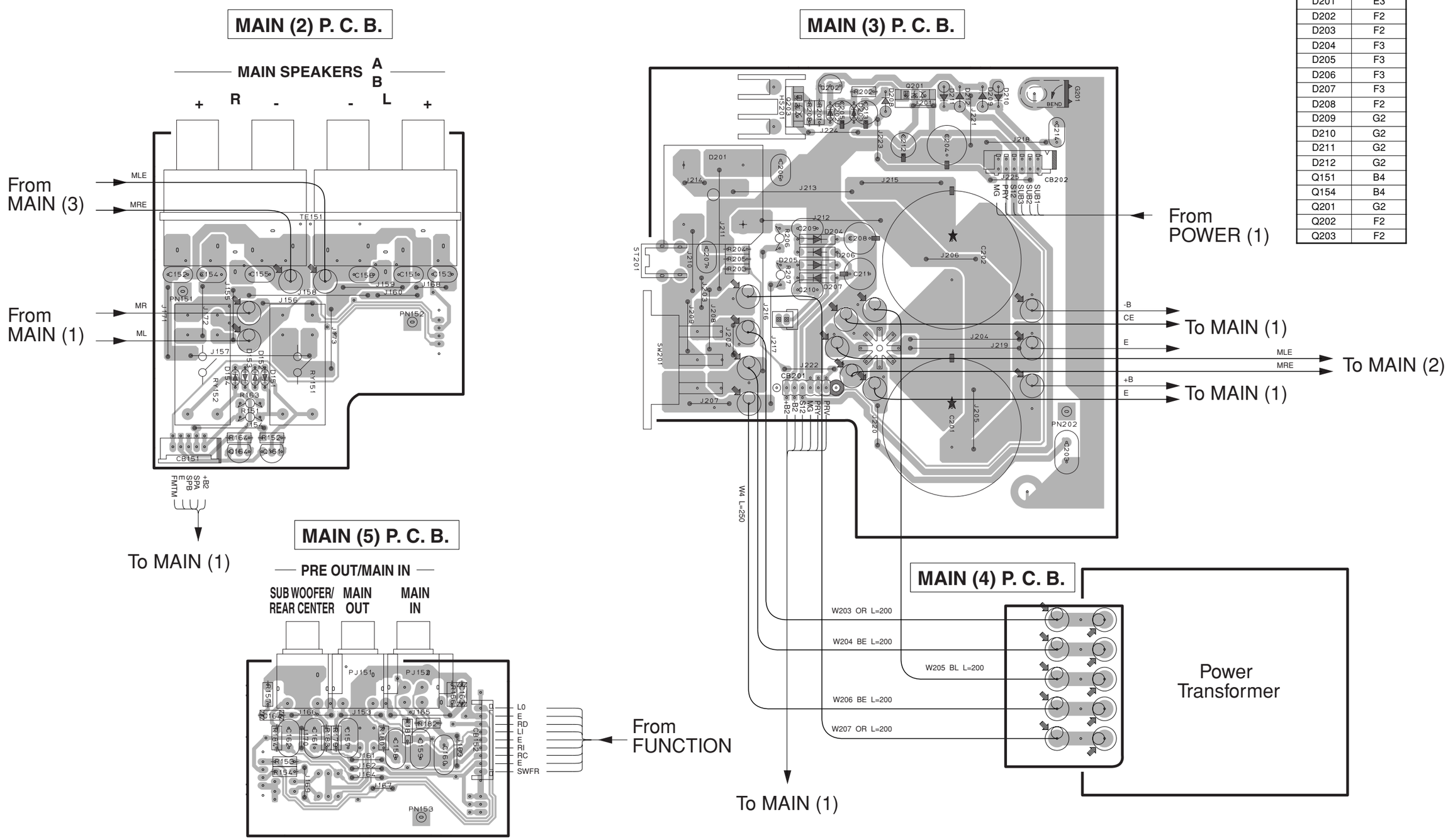

■ PRINTED CIRCUIT BOARD (Foil side)

• **Semiconductor Location**

Ref. No.	Location
D301	C3
D351	F5
D352	F5
Q301	C4

POWER (1) P. C. B.

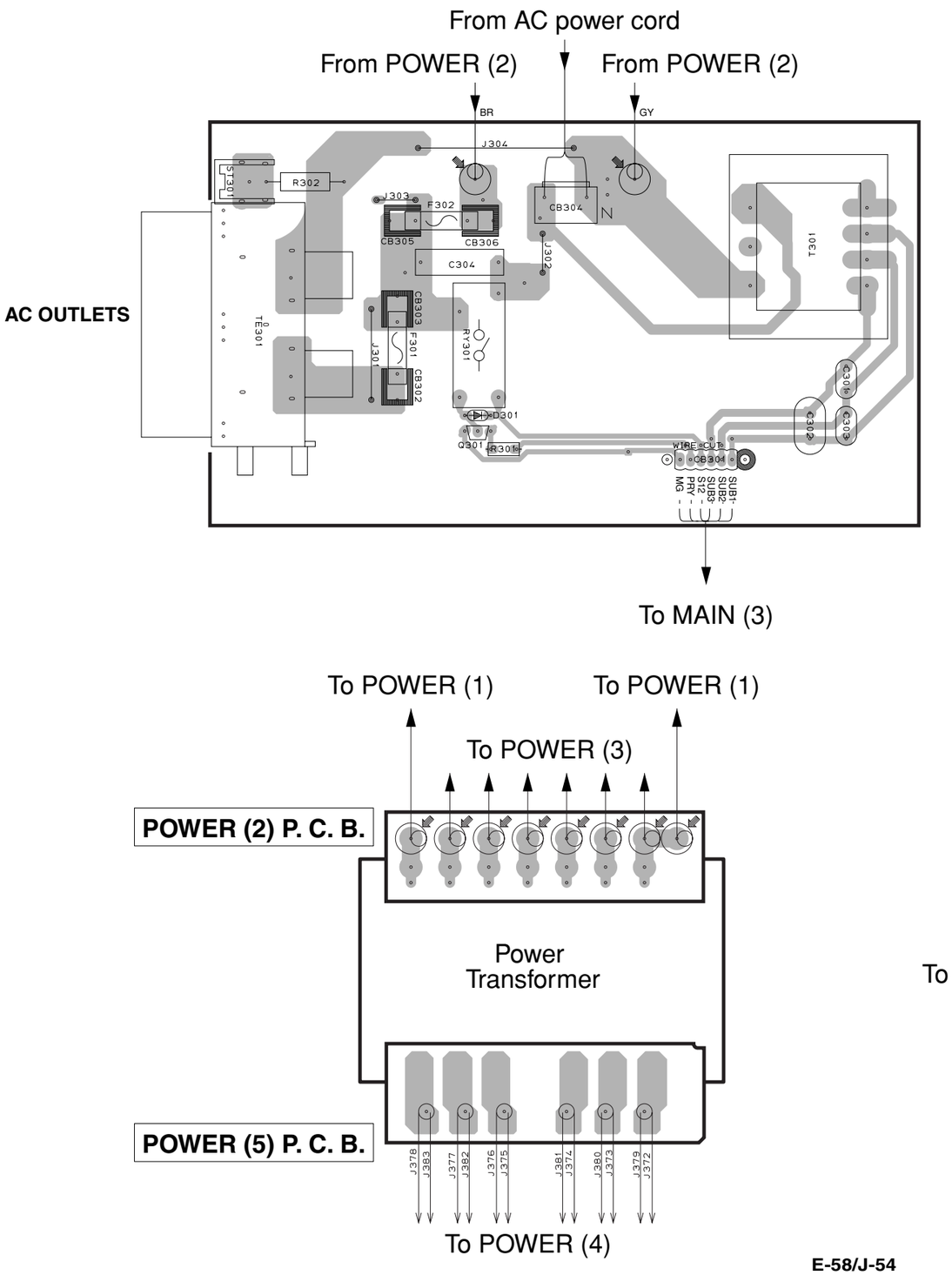

POWER (3) P. C. B.

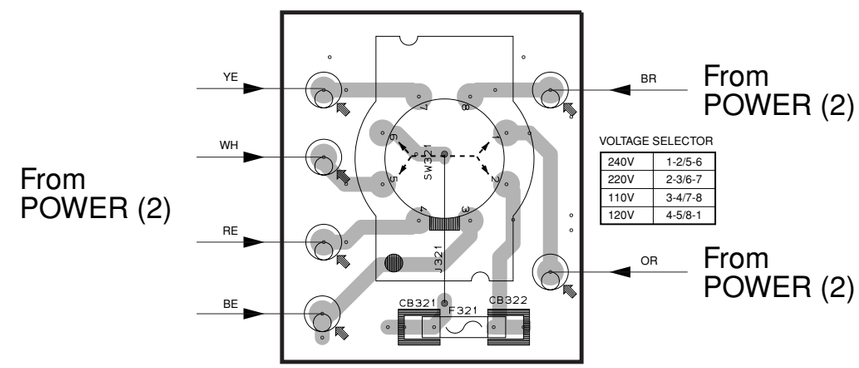

VOLTAGE SELECTOR

240V	1-2/5-6
220V	2-3/6-7
110V	3-4/7-8
120V	4-5/8-1

POWER (4) P. C. B.

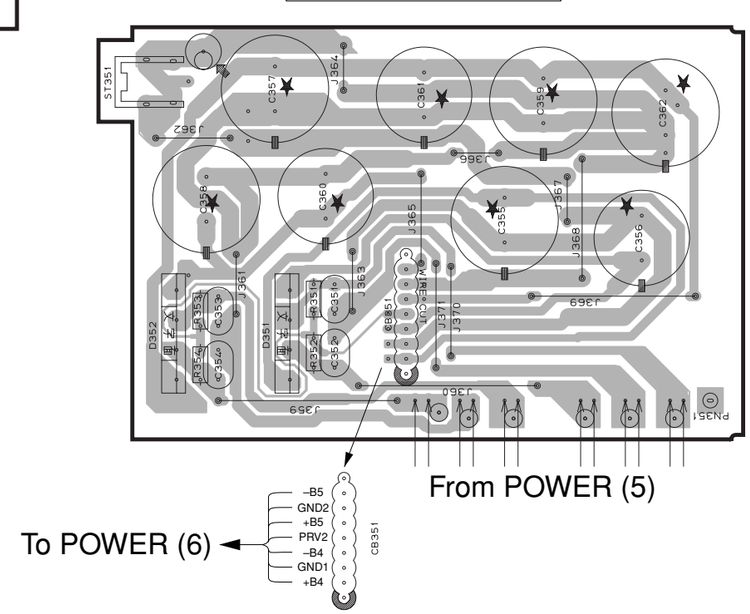

Circuit No.	J	U, C	R, T	A	B	G	L
C11~19	X	X	X	X	O	O	X
C301, 303	X	X	O	X	X	X	X
C302	O	O	X	O	O	O	O
C657, 568	X	O	O	O	X	X	O
CB302, 303	X	X	X	X	X	O	O
CB321, 322	X	X	O	X	X	X	X
F301	X	X	X	X	X	O	O
F321	X	X	O	X	X	X	X
IC1	X	X	X	X	O	O	X
J301	O	O	O	O	O	X	X
L1	X	X	X	X	O	O	X
Q2	X	X	X	X	O	O	X
R11~17	X	X	X	X	O	O	X
R302	X	O	X	X	X	X	X
R561, 562, 577, 578	X	O	O	O	X	X	O
SW321	X	X	O	O	O	O	O
SW551	X	X	O	X	X	X	X
W321~326	X	X	O	X	X	X	X
XL1	X	X	X	X	O	O	X

X: NOT USED
O: USED / APPLICABLE

■ PRINTED CIRCUIT BOARD (Foil side)

POWER (6) P. C. B.

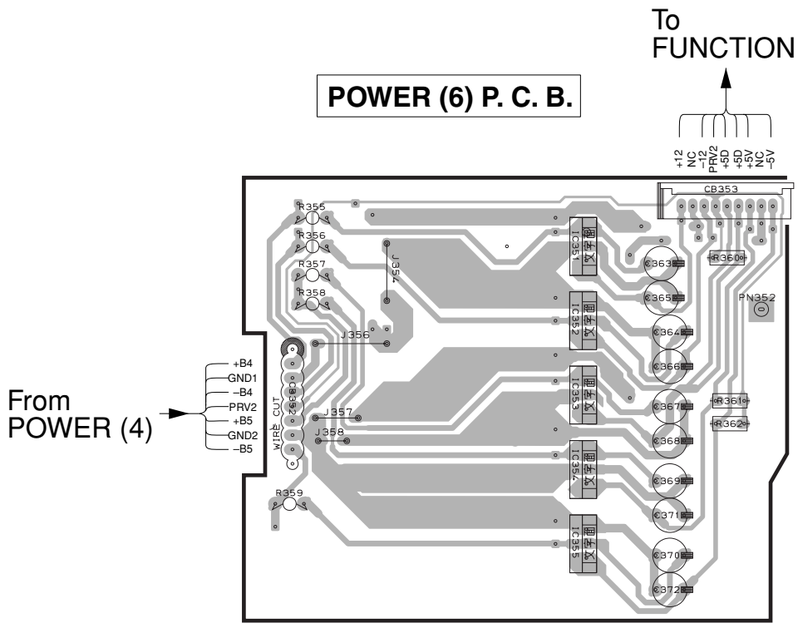

POWER (7) P. C. B.

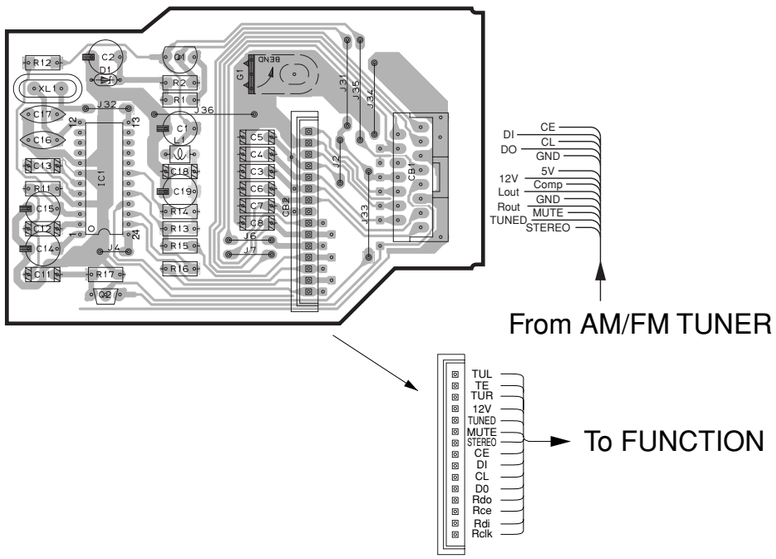

POWER (8) P. C. B.

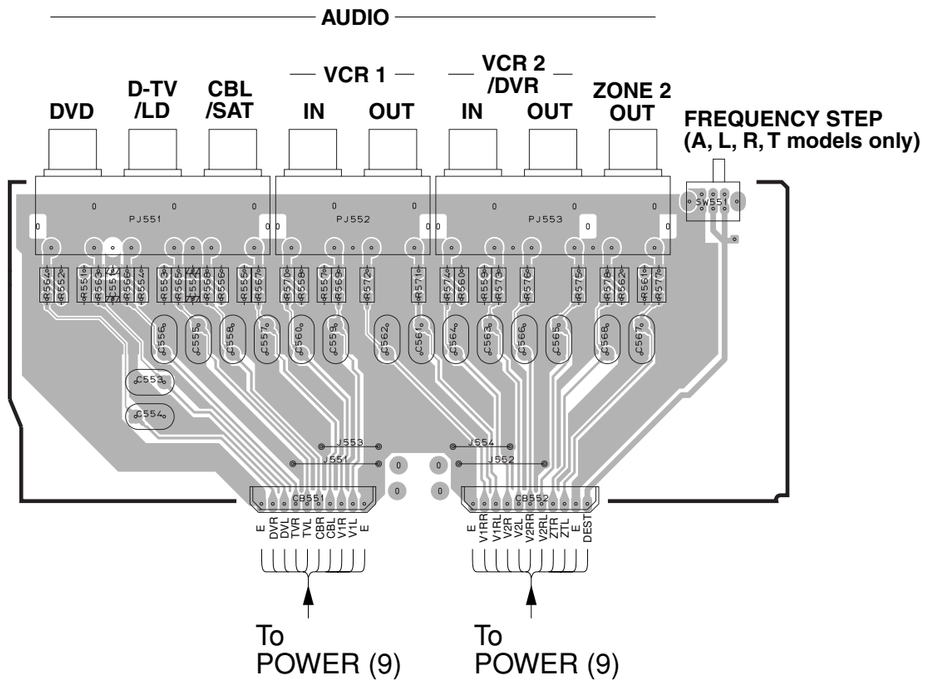

POWER (9) P. C. B.

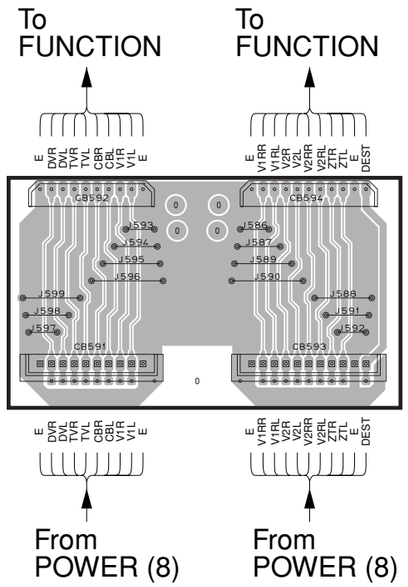

• Semiconductor Location

Ref. No.	Location
D1	B5
IC1	B5
IC351	C2
IC352	C2
IC353	C3
IC354	C3
IC355	C3
Q1	B5
Q2	B6

■ PIN CONNECTION DIAGRAM

• ICs

AN78N05
NJM7805FA
NJM7812FA
NJM78M05FA

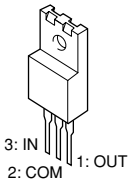

NJM79M05FA
NJM79M12FA

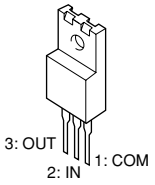

µPC29M33T-E1

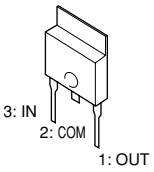

PQ025EZ5MZP

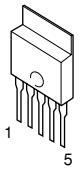

NJM2068MD
NJM2904M
TK15420M
µPC4570G2

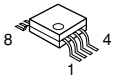

NJM2068LD
NJM4556AL

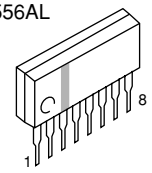

TC4066BP

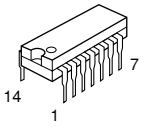

TC74HC00AF
TC74HCU04AF
TC74VHCT08AF

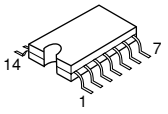

ADM202JRN-REEL7
CS3310-KS
LA7104M
LA7108M

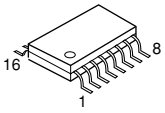

TC74HC4051AP
TC74HC4053AP
TC74HCU04AP

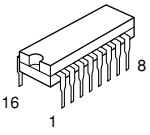

BU2092

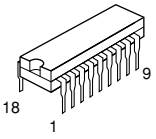

LC72722

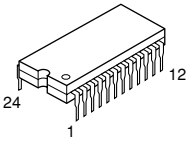

LC74781-9798

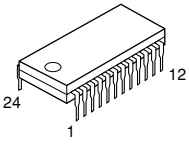

AK4393-VF-E2
CY62256LL

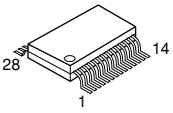

LC78211
LC78213

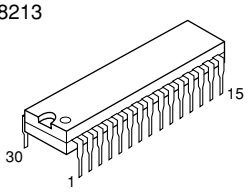

LC78212

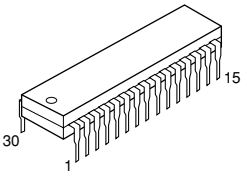

LA7109

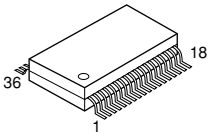

MSM514260C-60JS

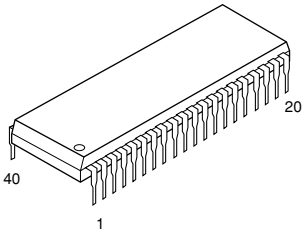

AK4527VQ

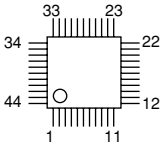

MBM29F400BC-70

LC75710NE
LC75712E

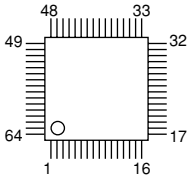

PM4007A

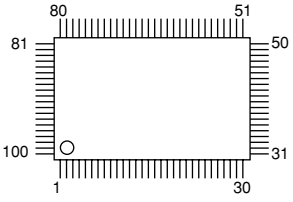

M30802SGP

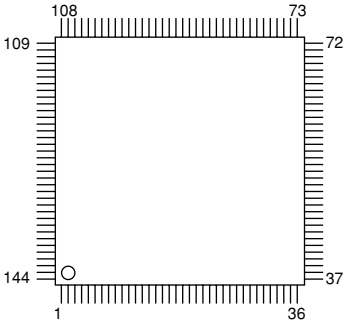

YSS928

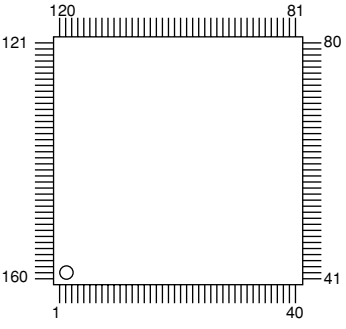

• Diodes

1N4002S 1SR139 1SS133 1SS270A 1T2 HZS7B2TD MTZJ4.7C MTZJ5.1A MTZJ5.6B	MTZJ6.8A MTZJ9.1A MTZJ11B MTZJ12A MTZJ12C MTZJ16A MTZJ22A MTZJ30.0A	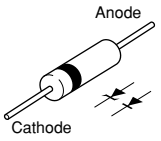	1SS355 RB501V-40 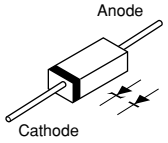
D2SBA20 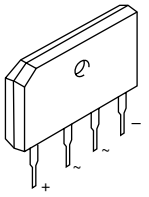	S5VB20 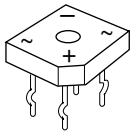		

• Transistors

2SA893A 2SA1015 2SB949 2SC535 2SC1815 2SC1890A 2SC2240 2SC2878 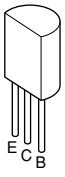	2SA933S 2SC1740S 2SD1915F 2SD1991A DTA144ES DTC114ES 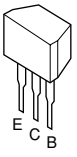	2SB1565 2SD2396 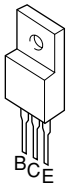	2SA1492 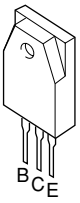
2SA1037 2SC2412K 2SC3326 DTA144EKA DTC144EKA	2SA1708 2SA1770 2SC4488 2SC4614 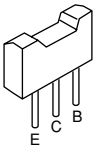	2SK246 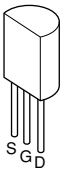	

■ SCHEMATIC DIAGRAM (FUNCTION)

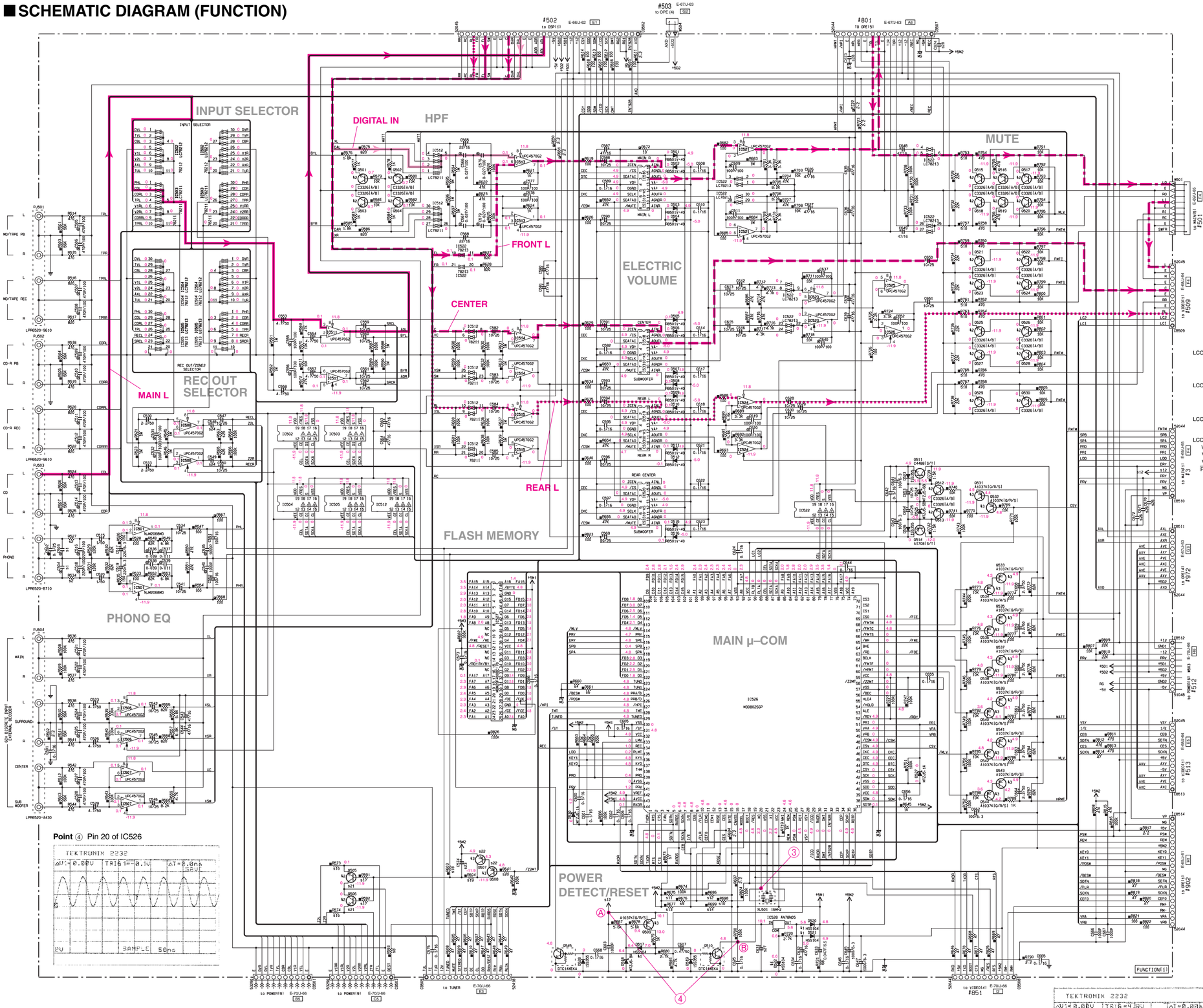

IC501: NJM2068MD
IC506–IC508, IC511, IC513–IC515: µPC4570G2
IC521, IC523–IC525: µPC4570G2
Dual OP-Amp

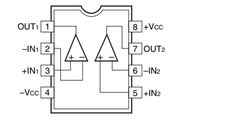

IC502, IC504: LC78212
Analog Function Switch

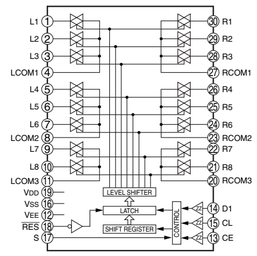

IC516, IC518, IC519, IC520: CS3310-KS
Stereo Digital Volume Controller

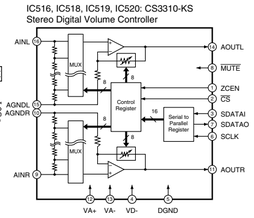

IC503, IC512: LC78211
Analog Function Switch

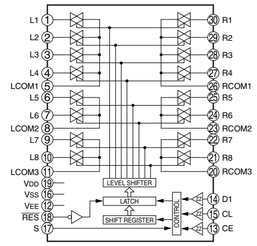

IC505, IC522: LC78213
Analog Function Switch

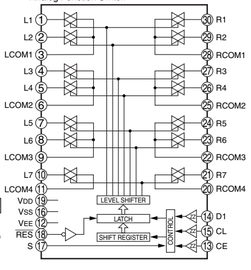

IC528: AN78N05
Voltage Regulator

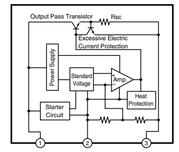

IC527: MBM29F400BC-70
4Mbit Flash Memory

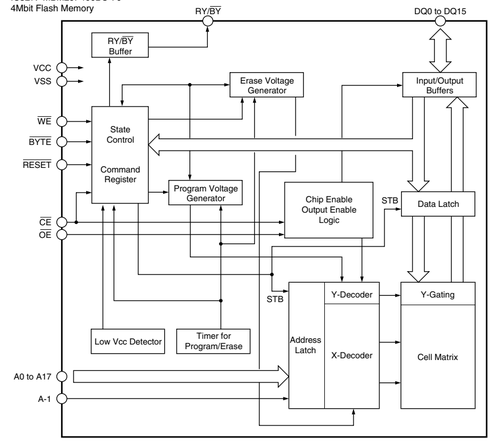

S	Circuit No.	J	U-C	R-T	A-L	B-G	Comment
1	C503-504	X	X	X	220P/100 UP85202	220P/100 UP85202	SEMKO 1dBm0TX
2	R527-534	47 HF45447	47 HF45447	47 HF45447	2.2K HF45622	2.2K HF45622	
3							
4	R660	1K RD35610	X	X	1K RD35610	1K RD35610	TUNER DEVELOPMENT
5							
6	R661	1K RD35610	1K RD35610	X	X	X	
7	R673	X	X	100K RD35810	X	X	TUNER Model Step 50
8	R593	X	X	47 RD35447	X	X	
9	R676	X	X	X	X	100K RD35810	
10	R698	100K RD35810	100K RD35810	100K RD35810	100K RD35810	X	RDS No Trap
11	R675	X	X	X	100K RD35810	100K RD35810	
12	R696	100K RD35810	100K RD35810	100K RD35810	100K RD35810	X	Zone 2 TV (PAL)
13	R677	X	100K RD35810	100K RD35810	100K RD35810	X	No Trap (SECAM)
14	R699	100K RD35810	X	X	X	100K RD35810	
15							
16	R573-574	X	1K RD35610	1K RD35610	1K RD35610	X	Audio Output & Mute
17	R591-592	X	3.3K RD35633	3.3K RD35633	3.3K RD35633	X	
18	R603	X	100K RD35810	100K RD35810	100K RD35810	X	
19	R604	X	150 RD35510	150 RD35510	150 RD35510	X	
20	R641	X	10K RD35710	10K RD35710	10K RD35710	X	Zone 2
21	D505-506	X	C332614/B1 VD30370	C332614/B1 VD30370	C332614/B1 VD30370	X	
22	D507-508	X	A1037K(G/B/S) IA10370	A1037K(G/B/S) IA10370	A1037K(G/B/S) IA10370	X	
23	C574	X	2.2/50 UU16622	2.2/50 UU16622	2.2/50 UU16622	X	
24	C548-549	X	10/25 UU14710	10/25 UU14710	10/25 UU14710	X	
25	R563-565	X	33K RD35733	33K RD35733	33K RD35733	X	
26	C570-672	X	0.1/16 US13510	X	X	X	
27	C631	470/25 UR84847	470/25 UR84847	220/25 UR84822	470/25 UR84847	470/25 UR84847	
28	C673, 674	X	0 VJ59910	X	X	X	

x: NOT USED
O: USED / APPLICABLE

RESISTOR

REMARKS	PARTS NAME
NO MARK	CARBON FILM RESISTOR (P=5)
⊠	CARBON FILM RESISTOR (P=10)
△	METAL OXIDE FILM RESISTOR
▲	METAL FILM RESISTOR
⊗	METAL PLATE RESISTOR
◇	FIRE PROOF CARBON FILM RESISTOR
□	CEMENT MOLDED RESISTOR
⊘	SEMI VARIABLE RESISTOR
■	CHIP RESISTOR

CAPACITOR

REMARKS	PARTS NAME	
NO MARK	ELECTROLYTIC CAPACITOR	⊟
⊗	TANTALUM CAPACITOR	
NO MARK	CERAMIC CAPACITOR	⫼
◉	CERAMIC TUBULAR CAPACITOR	
⊗	POLYESTER FILM CAPACITOR	
○	POLYSTYRENE FILM CAPACITOR	
ⓘ	MICA CAPACITOR	
ⓟ	POLYPROPILENE FILM CAPACITOR	
◉	SEMICONDUCTIVE CERAMIC CAPACITOR	
ⓢ	POLYPHENYLENE SULFIDE FILM CAPACITOR	

NOTICE (model)
(J)..... JAPANESE
(U)..... U.S.A
(C)..... CANADIAN
(R)..... GENERAL
(A)..... AUSTRALIAN
(B)..... BRITISH
(G)..... EUROPEAN
(T)..... CHINA
(L)..... SINGAPORE

Interchangeable Parts at Manufacture-Stage

Mark	Reference Parts Number	Parts Name
k1	0517-520-521-522	1SS133 1SS176 1SS154
k2	0501-506-512-513-515-630	2SC3326(A/B) 2SC3326(B)
k3	0507-509-531-544	2SA1037K(A/B/S) 2SB709A(P/Q/R/S)
k4		
k5		

★ All voltage are measured with a 10M /V DC electric volt meter.
★ Components having special characteristics are marked ⚠ and must be replaced with parts having specifications equal to those originally installed.
★ Schematic diagram is subject to change without notice.

● 電圧は、内部抵抗10MΩの電圧計で測定したものです。
● ⚠印のある部品は、安全性確保部品を示しています。部品の交換が必要な場合、パーツリストに記載されている部品を使用してください。
● 本回路図は標準回路図です。改良のため予告なく変更することがございます。

Point ⑤ emitter of Q509 and collector of Q510

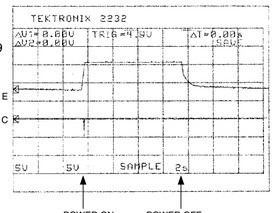

POWER ON
(Connect the power cord)

POWER OFF
(Disconnect the power cord)

■SCHEMATIC DIAGRAM (OPERATION 1/2)

★ All voltage are measured with a 10M /V DC electric volt meter.
★ Components having special characteristics are marked ⚠ and must be replaced with parts having specifications equal to those originally installed.
★ Schematic diagram is subject to change without notice.

● 電圧は、内部抵抗10MΩの電圧計で測定したものです。
● ⚠印のある部品は、安全性確保部品を示しています。部品の交換が必要な場合、パーツリストに記載されている部品を使用してください。
● 本回路図は標準回路図です。改良のため予告なく変更することがございます。

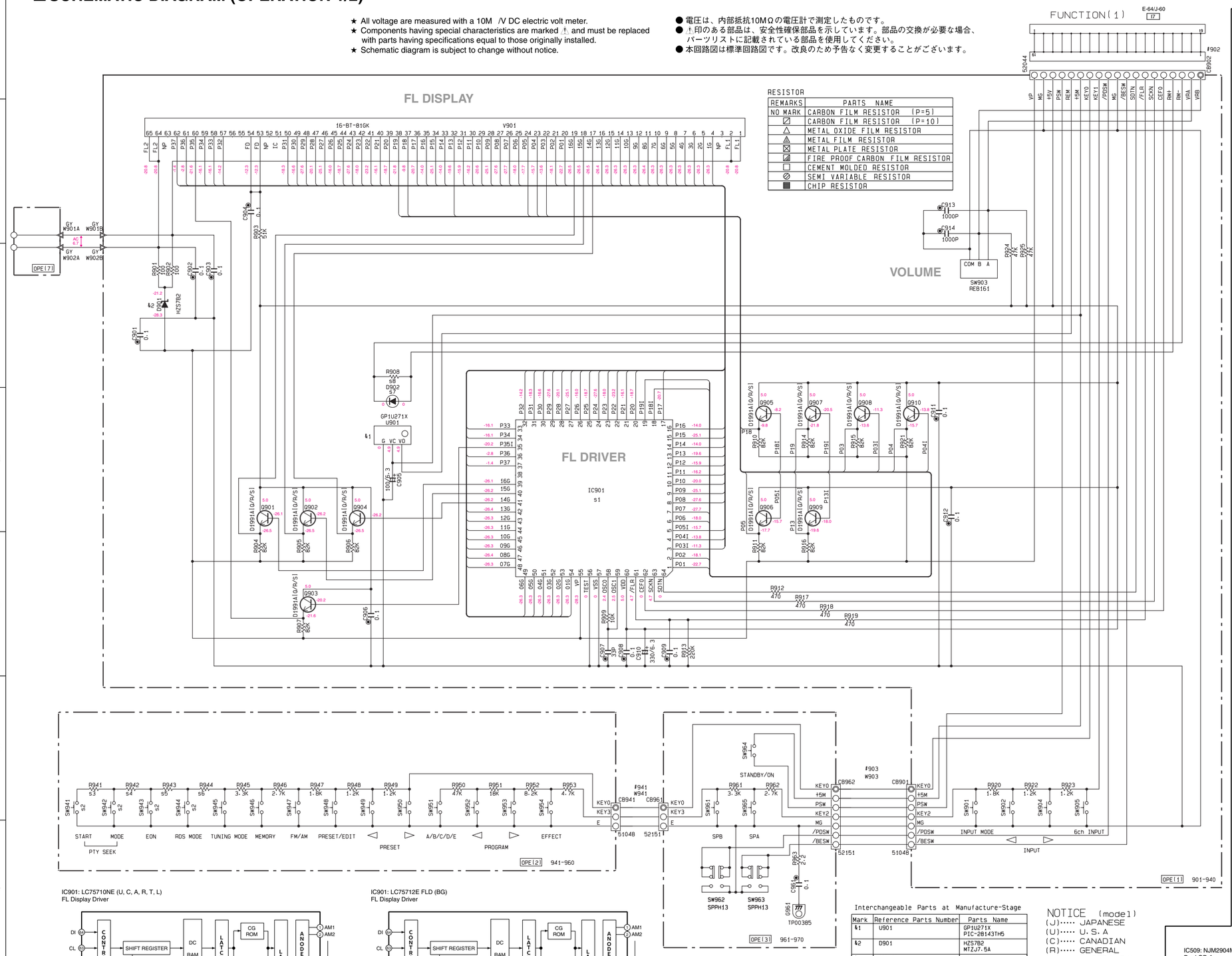

RESISTOR

REMARKS	PARTS NAME
NO MARK	CARBON FILM RESISTOR (P=5)
⊘	CARBON FILM RESISTOR (P=10)
△	METAL OXIDE FILM RESISTOR
⚠	METAL FILM RESISTOR
⊠	METAL PLATE RESISTOR
◪	FIRE PROOF CARBON FILM RESISTOR
□	CEMENT MOLDED RESISTOR
⊘	SEMI VARIABLE RESISTOR
■	CHIP RESISTOR

Interchangeable Parts at Manufacture-Stage

Mark	Reference Parts Number	Parts Name
&1	U901	GP1U271X PIC-28143TH5
&2	D901	HZS7B2 MTZJ7.5A
&3	D972, 973	HSS104 1SS133, 1SS176
&4		
&5		

S	Circuit No.	J	U·C·R·T·A·L	B·G
1	IC901	LC75710NE XR18BA0	LC75710NE XR18BA0	LC75712E XV160A0
2	SW941-944	X	X	VG39290
3	R941	X	X	47K HF45747
4	R942	X	X	18K HF45718
5	R943	X	X	8.2K HF45682
6	R944	X	X	4.7K HF45647
7	D902	X	SIR-505ST V259820	SIR-505ST V259820
8	R908	X	10K HF45710	10K HF45710

x: NOT USED

CAPACITOR

REMARKS	PARTS NAME	
NO MARK	ELECTROLYTIC CAPACITOR	‖
⊗	TANTALUM CAPACITOR	
NO MARK	CERAMIC CAPACITOR	‖
◉	CERAMIC TUBULAR CAPACITOR	
⓪	POLYESTER FILM CAPACITOR	
○	POLYSTYRENE FILM CAPACITOR	
Ⓘ	MICA CAPACITOR	
Ⓟ	POLYPROPYLENE FILM CAPACITOR	
◉	SEMICONDUCTIVE CERAMIC CAPACITOR	
Ⓢ	POLYPHENYLENE SULFIDE FILM CAPACITOR	

NOTICE (model)
(J)····· JAPANESE
(U)····· U.S.A
(C)····· CANADIAN
(R)····· GENERAL
(A)····· AUSTRALIAN
(B)····· BRITISH
(G)····· EUROPEAN
(T)····· CHINA
(L)····· SINGAPORE

IC901: LC75710NE (U, C, A, R, T, L)
FL Display Driver

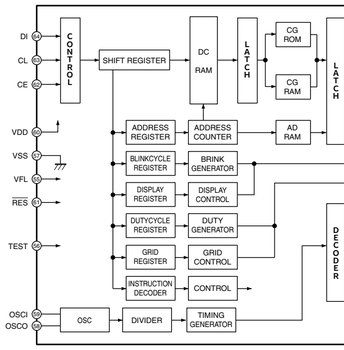

IC901: LC75712E FLD (BG)
FL Display Driver

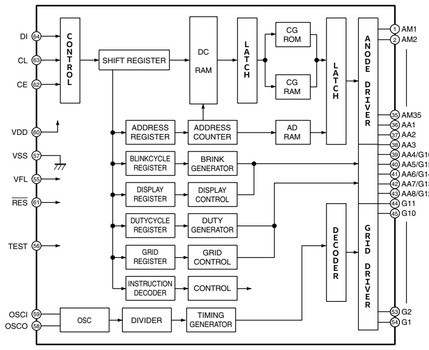

IC DATA (DSP P.C.B.)

IC502: MSM514260C-60JS
4Mbit DRAM

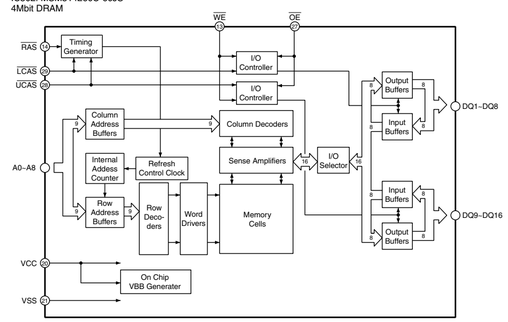

IC503: PM4007A
Demodulater

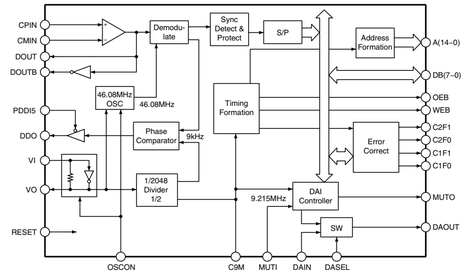

IC504: CY62256LL
Static RAM

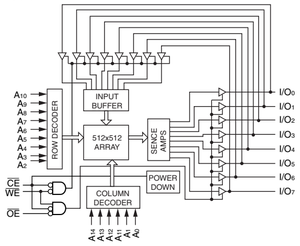

IC505: PQ025EZ5MZP
Regulator

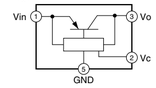

IC507, IC513: TC74HC00AF
IC510, IC511: TC74HCU04AF
Quad 2-Input Nand Gate

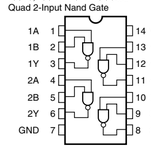

IC506: μPC29M33T-E1
Voltage Regulator

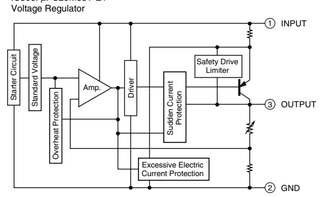

IC508: TC74VHCT08AF
Quad 2-Input And Gate

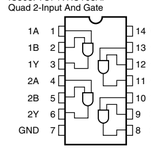

IC520, IC521: AK4393-VF-E2
D/A Converter

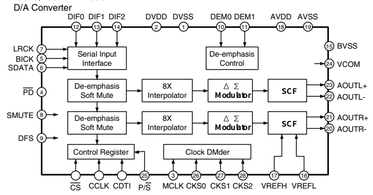

IC512, IC515~519, IC522, IC523:
μPC4570G2
Dual OP-Amp

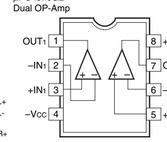

IC509: NJM2904M
Dual OP-Amp

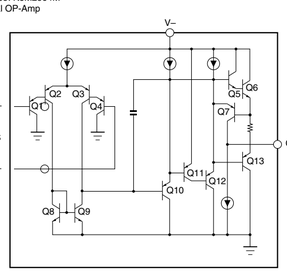

IC514: AK4527VQ
24bit CODEC

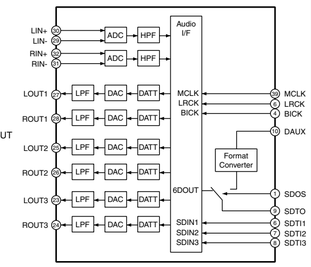

■SCHEMATIC DIAGRAM (DSP)

RESISTOR

REMARKS	PARTS NAME
NO MARK	CARBON FILM RESISTOR (P=5)
⊠	CARBON FILM RESISTOR (P=10)
△	METAL OXIDE FILM RESISTOR
◬	METAL FILM RESISTOR
⊠	METAL PLATE RESISTOR
◪	FIRE PROOF CARBON FILM RESISTOR
□	CEMENT MOLDED RESISTOR
⊘	SEMI VARIABLE RESISTOR
■	CHIP RESISTOR

CAPACITOR

REMARKS	PARTS NAME	
NO MARK	ELECTROLYTIC CAPACITOR	
⊗	TANTALUM CAPACITOR	
NO MARK	CERAMIC CAPACITOR	
◉	CERAMIC TUBULAR CAPACITOR	
◎	POLYESTER FILM CAPACITOR	
○	POLYSTYRENE FILM CAPACITOR	
ⓘ	MICA CAPACITOR	
ⓟ	POLYPROPYLENE FILM CAPACITOR	
◉	SEMICONDUCTIVE CERAMIC CAPACITOR	
ⓢ	POLYPHENYLENE SULFIDE FILM CAPACITOR	

NOTICE (model)
(J)..... JAPANESE
(U)..... U.S.A
(C)..... CANADIAN
(R)..... GENERAL
(A)..... AUSTRALIAN
(B)..... BRITISH
(G)..... EUROPEAN
(T)..... CHINA
(L)..... SINGAPORE

Interchangeable Parts at Manufacture-Stage

Mark	Reference Parts Number	Parts Name
k1	0514-515-519-522-527	2SC3326(A/B) 2SC3326(B)
k2	IC509	NJM2904M NJM2904G
k3	IC502	MSM514260C-60JS SDM4260CLU-6S
k4	CB503-506	GP1FA551RZ TQR179

s	Parts Number	J-R-L-T	U-C	A-B-G	Memo
1	Block	○	×		RF Demodulator
2	PJ501	v629050	v571530		RF Demodulator
3	R564	×	4.7K RD35647		RF Demodulator
4	R711	×	100K RD35810		RF Demodulator
5	C594, 596, 717	0.1/16 US13510	X	0.1/16 US13510	FCC
6	C661, 663, 665, 719, 721	47P US06147	X	47P US06147	FCC
7	R686	2.2 RD35322	X	2.2 RD35322	FCC

x: NOT USED
O:USED / APPLICABLE

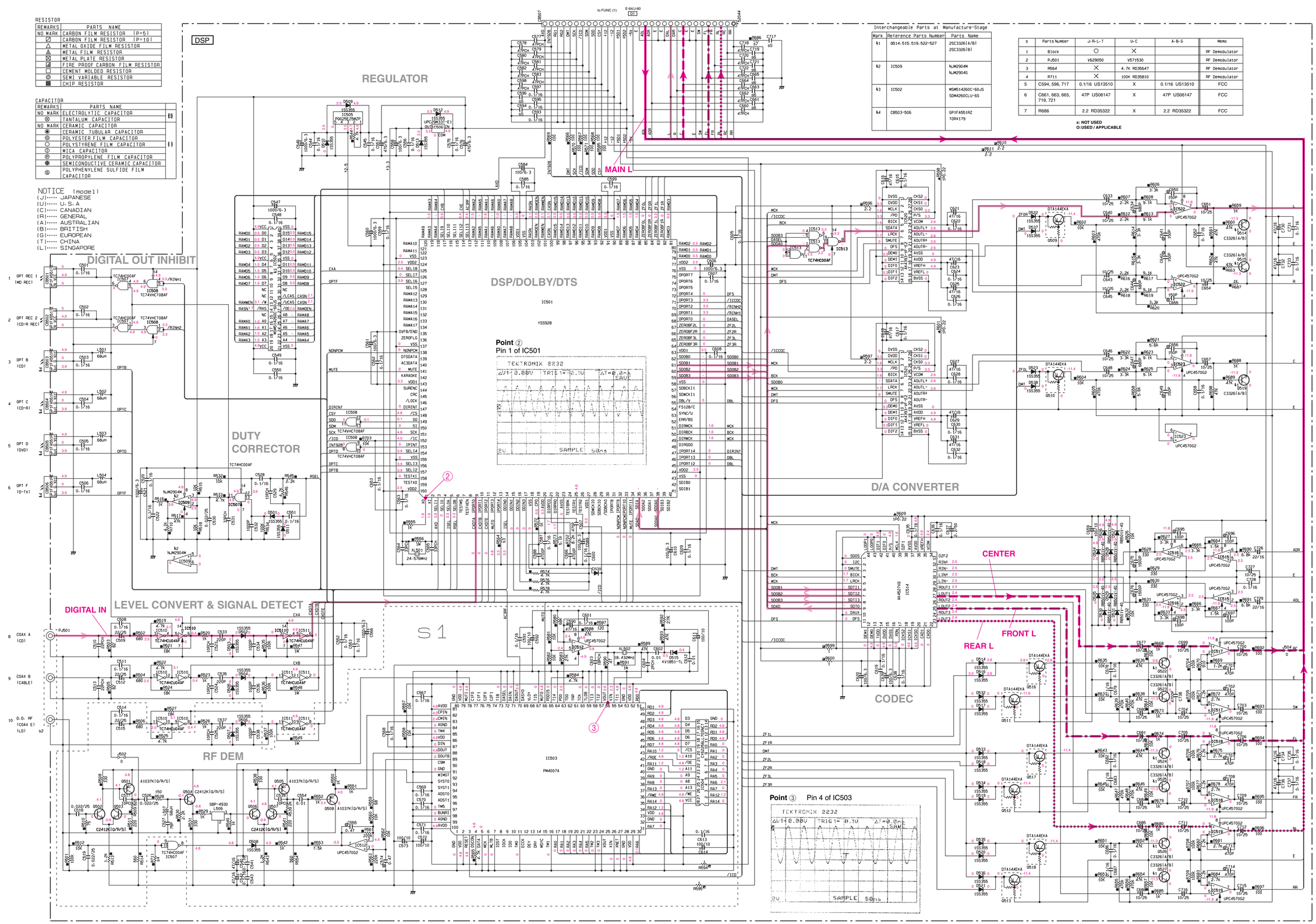

★ All voltage are measured with a 10M /V DC electric volt meter.
★ Components having special characteristics are marked ⚠ and must be replaced with parts having specifications equal to those originally installed.
★ Schematic diagram is subject to change without notice.

● 電圧は、内部抵抗10MΩの電圧計で測定したものです。
● ⚠印のある部品は、安全性確保部品を示しています。部品の交換が必要な場合、パーツリストに記載されている部品を使用してください。
● 本回路図は標準回路図です。改良のため予告なく変更することがございます。

■SCHEMATIC DIAGRAM (OPERATION 2/2)

RESISTOR

REMARKS	PARTS NAME
NO MARK	CARBON FILM RESISTOR (P=5)
▨	CARBON FILM RESISTOR (P=10)
△	METAL OXIDE FILM RESISTOR
◭	METAL FILM RESISTOR
⊠	METAL PLATE RESISTOR
◪	FIRE PROOF CARBON FILM RESISTOR
□	CEMENT MOLDED RESISTOR
⊘	SEMI VARIABLE RESISTOR
■	CHIP RESISTOR

CAPACITOR

REMARKS	PARTS NAME	
NO MARK	ELECTROLYTIC CAPACITOR	‖
⊗	TANTALUM CAPACITOR	‖
NO MARK	CERAMIC CAPACITOR	‖
◉	CERAMIC TUBULAR CAPACITOR	‖
◎	POLYESTER FILM CAPACITOR	‖
○	POLYSTYRENE FILM CAPACITOR	‖
Ⓘ	MICA CAPACITOR	‖
Ⓟ	POLYPROPYLENE FILM CAPACITOR	‖
◉	SEMICONDUCTIVE CERAMIC CAPACITOR	‖
Ⓢ	POLYPHENYLENE SULFIDE FILM CAPACITOR	‖

NOTICE (model)
(J)····· JAPANESE
(U)····· U.S.A
(C)····· CANADIAN
(R)····· GENERAL
(A)····· AUSTRALIAN
(B)····· BRITISH
(G)····· EUROPEAN
(T)····· CHINA
(L)····· SINGAPORE

IC801: TC4066BP
Quad Analog Switch/Multiplexer

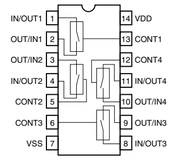

IC802, IC803: NJM2068LD
Dual OP-Amp

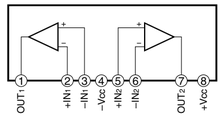

IC804: NJM4556AL
Dual OP-Amp

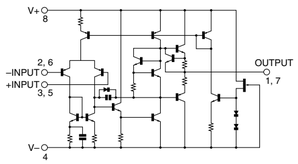

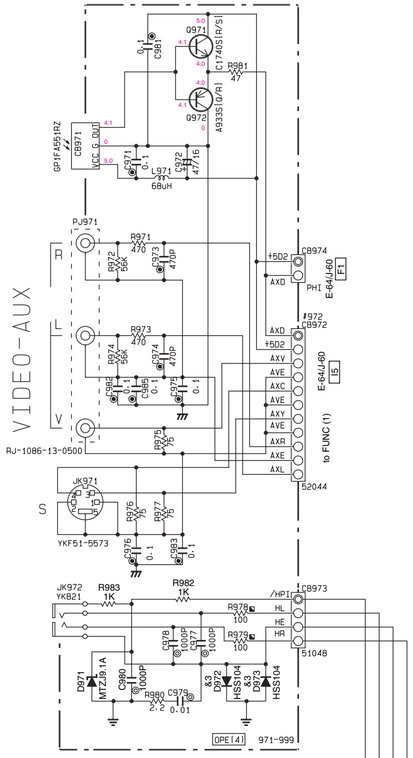

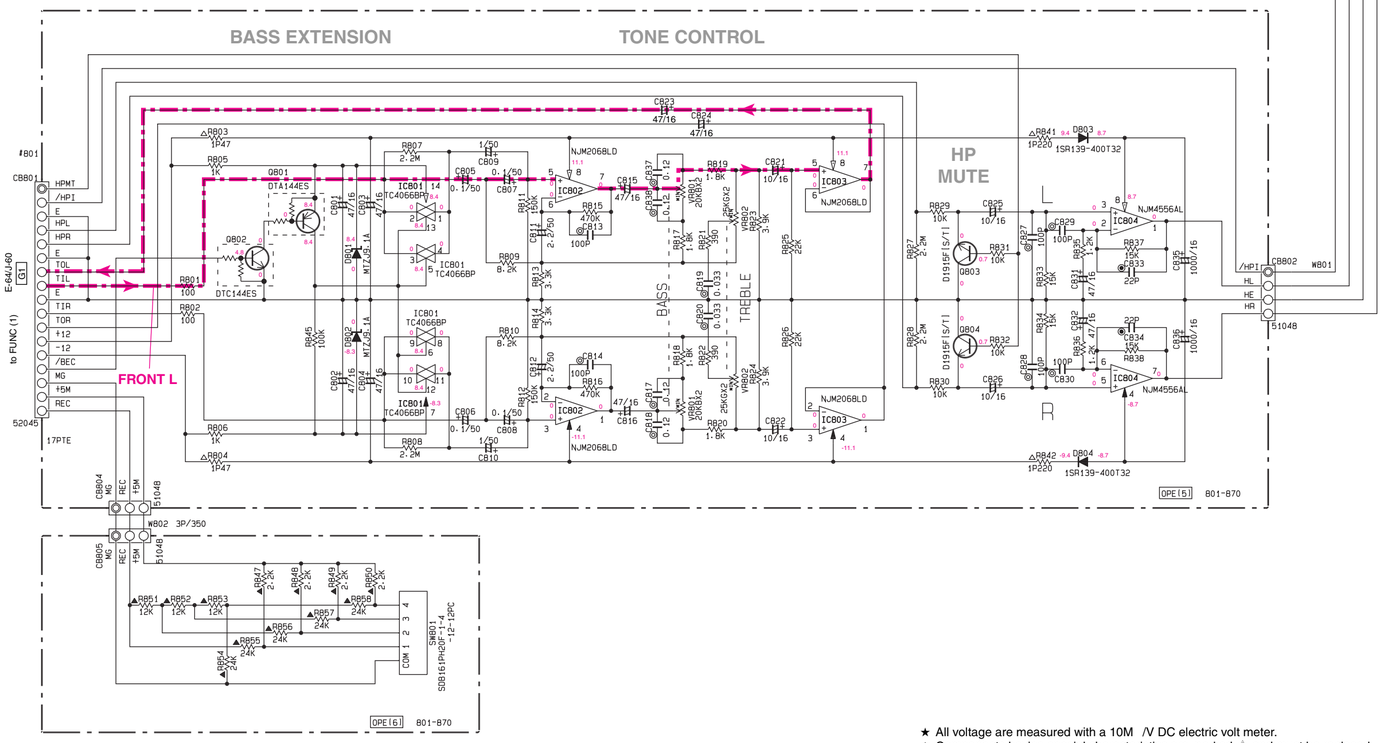

★ All voltage are measured with a 10M /V DC electric volt meter.
★ Components having special characteristics are marked ⚠ and must be replaced with parts having specifications equal to those originally installed.
★ Schematic diagram is subject to change without notice.

● 電圧は、内部抵抗10MΩの電圧計で測定したものです。
● ⚠印のある部品は、安全性確保部品を示しています。部品の交換が必要な場合、パーツリストに記載されている部品を使用してください。
● 本回路図は標準回路図です。改良のため予告なく変更することがございます。

IC DATA (VIDEO P.C.B.)

IC601: TK15420M
Video Amp

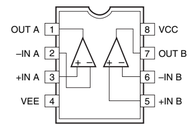

IC602, IC603~IC605, IC702, IC703: TC74HC4051AP
Analog Multiplexer/Demultiplexer

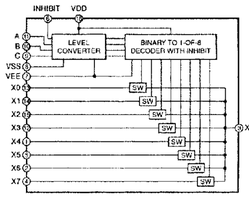

INPUT STATES				"ON" CHANNEL (S)
INHIBIT	C	B	A	
0	0	0	0	0
0	0	0	1	1
0	0	1	0	2
0	0	1	1	3
0	1	0	0	4
0	1	0	1	5
0	1	1	0	6
0	1	1	1	7
1	X	X	X	NONE

IC606, IC607, IC704, IC752: TC74HC4053AP
Analog Multiplexer/Demultiplexer

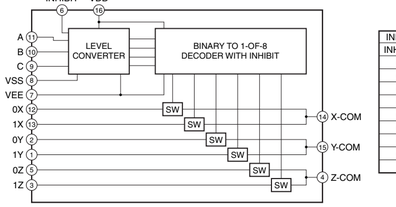

INPUT STATES				"ON" CHANNNEL (S)
INHIBIT	C	B	A	
0	0	0	0	0X, 0Y, 0Z
0	0	0	1	1X, 0Y, 0Z
0	0	1	0	0X, 1Y, 0Z
0	0	1	1	1X, 1Y, 0Z
0	1	0	0	0X, 0Y, 1Z
0	1	0	1	1X, 0Y, 1Z
0	1	1	0	0X, 1Y, 1Z
0	1	1	1	1X, 1Y, 1Z
1	X	X	X	NONE

IC608: TC74HCU04AP
Hex Inverters

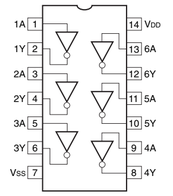

IC610: LC74781-9798
On Screen Display Controller

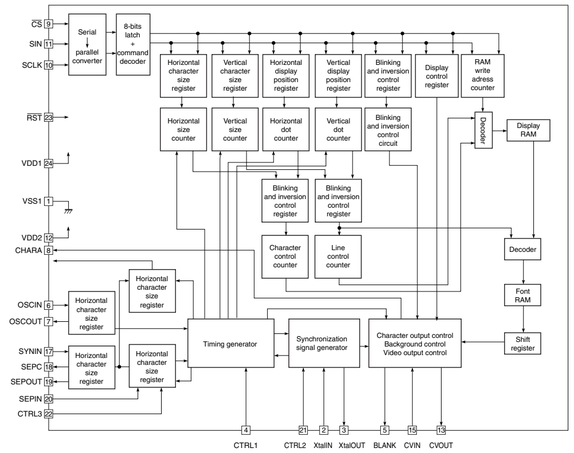

IC609: LA7109
75 Video Driver

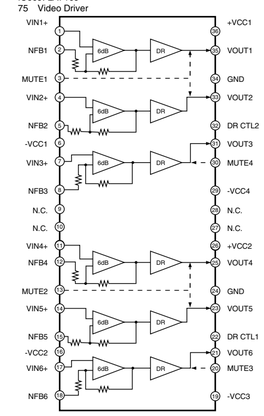

IC611: BU2092
Serial In/Parallel Out Driver

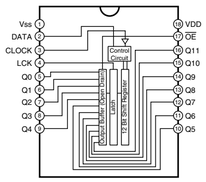

IC701: LA7108M
Video Amp

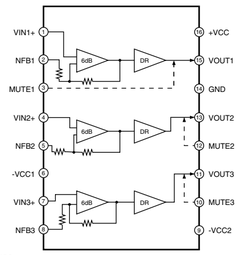

IC751: LA7104M
Video Amp

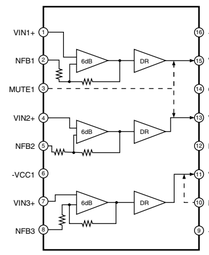

IC851: ADM202JRN-REEL7
RS-232 Driver/Receiver

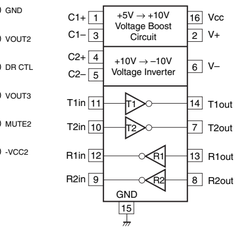

■SCHEMATIC DIAGRAM (VIDEO)

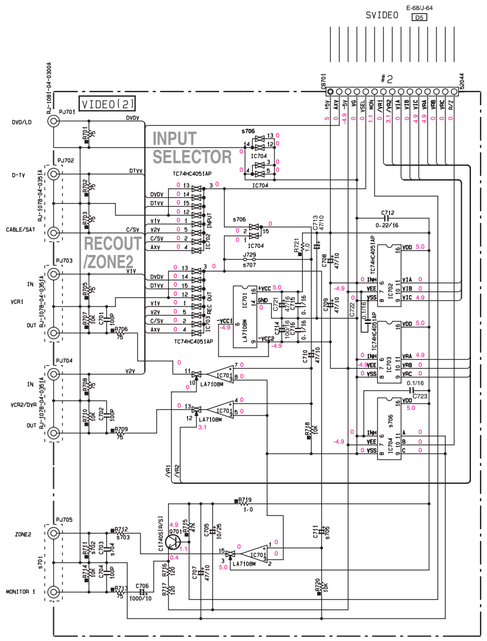

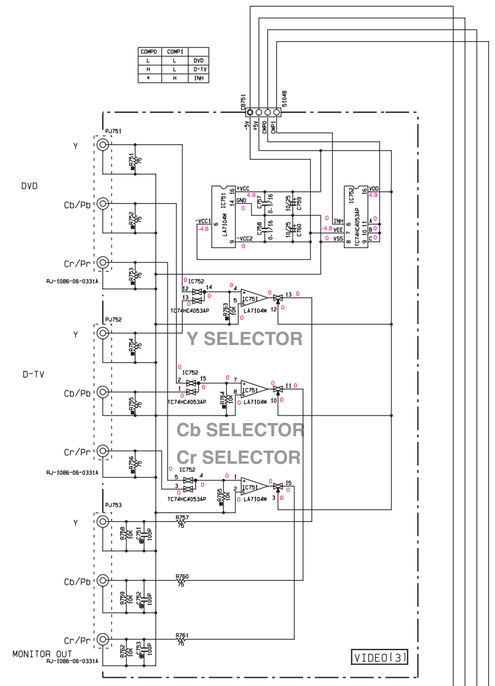

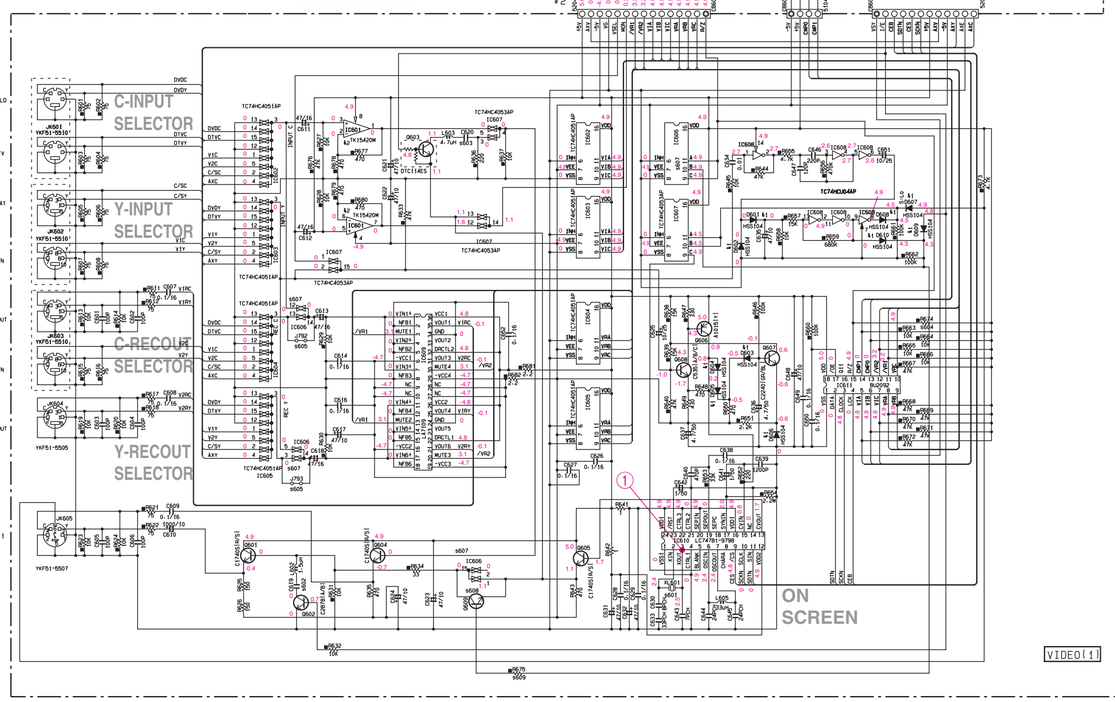

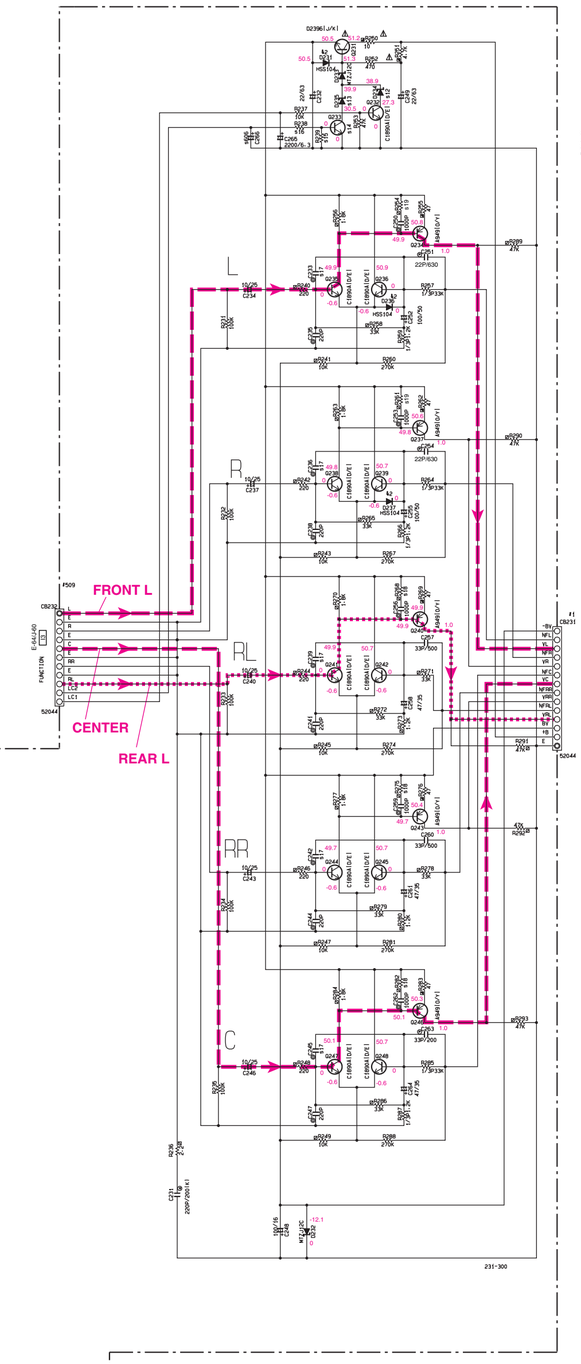

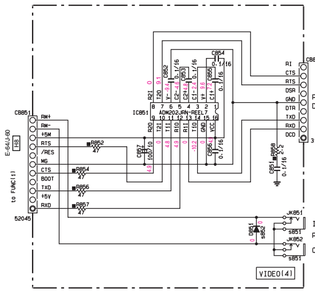

Parts Number	J	U	C	R-T	A-L	G-B
XL601	14.31818MHz YV5H980	14.31818MHz YV5H980	14.31818MHz YV5H980	14.31818MHz YV5H980	17.734475MHz YV5H950	17.734475MHz YV5H950
C619	1500P US06315	1500P US06315	1500P US06315	1500P US06315	820P US06260	820P US06260
C620	390P US06239	390P US06239	390P US06239	390P US06239	270P US06227	270P US06227
R674	x	47K RD35747	47K RD35747	47K RD35747	47K RD35747	x
J792-793	RD35000	x	x	x	x	RD35000
C266	x	2200/6.3 UR61502	2200/6.3 UR61502	2200/6.3 UR61502	2200/6.3 UR61502	
IC606	x	TC74HC4053AP IR40530	TC74HC4053AP IR40530	TC74HC4053AP IR40530	TC74HC4053AP IR40530	x
Q609	C2878IA/BI IC28782	x	x	x	x	C2878IA/BI IC28782
R675	RD35710	x	x	x	x	RD35710
PJ705	RJ-1081-04-03004 V277340	RJ-1078-04-0351A YV32500	RJ-1078-04-0351A YV32500	RJ-1078-04-0351A YV32500	RJ-1078-04-0351A YV32500	RJ-1081-04-03004 V277340
R711	x	10K RD35710	10K RD35710	10K RD35710	10K RD35710	x
R712	x	75 RD35475	75 RD35475	75 RD35475	75 RD35475	x
C703	x	100P US06210	100P US06210	100P US06210	100P US06210	x
C711	x	47/10 UR82747	47/10 UR82747	47/10 UR82747	47/10 UR82747	x
IC704	x	TC74HC4053AP IR40530	TC74HC4053AP IR40530	TC74HC4053AP IR40530	TC74HC4053AP IR40530	x
J729	RD35000	x	x	x	x	RD35000
D234	WZJU34 VG43940	WZJU34 VG44010	WZJU34 VG44010	WZJU34 VG44010	WZJU34 VG44010	WZJU34 VG44010
D235	x	WZJ5.1A VG43910	WZJ5.1A VG43910	WZJ5.1A VG43910	WZJ5.1A VG43910	WZJ5.1A VG43910
Q233	x	C1890A1D/E1 VF98310	C1890A1D/E1 VF98310	C1890A1D/E1 VF98310	C1890A1D/E1 VF98310	C1890A1D/E1 VF98310
R239	x	47K HF45747	47K HF45747	47K HF45747	47K HF45747	47K HF45747
R238	x	10K HF45710	10K HF45710	10K HF45710	10K HF45710	10K HF45710
C233-C236-C239 C240-C245	100P VG46560	100P VG46560	100P VG46560	220P VG46260	220P VG46260	220P VG46260
R268, 275, 282	150 HC65515	150 HC65515	150 HC65515	560 HC65556	560 HC65556	560 HC65556
R254, 261	150 HC65515	150 HC65515	150 HC65515	270 HC65527	270 HC65527	270 HC65527
J851-852	x	YJ72680	YJ72680	YJ72680	YJ72680	x
Q851	x	155356 YT33290	155356 YT33290	155356 YT33290	155356 YT33290	x

Interchangeable Parts at Manufacture-Stage

Mark	Reference Parts Number	Parts Name
k1	Q601-610-231-236-237	HS5104 155133 155176
k2	IC601	TK15420M AD8058AR

Point ① Pin 3 of IC610

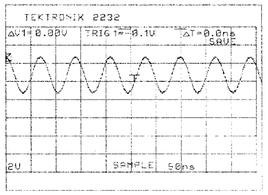

★ All voltage are measured with a 10M /V DC electric volt meter.
★ Components having special characteristics are marked ⚠ and must be replaced with parts having specifications equal to those originally installed.
★ Schematic diagram is subject to change without notice.

● 電圧は、内部抵抗10MΩの電圧計で測定したものです。
● ⚠印のある部品は、安全性確保部品を示しています。部品の交換が必要な場合、パーツリストに記載されている部品を使用してください。
● 本回路図は標準回路図です。改良のため予告なく変更することがございます。

■ SCHEMATIC DIAGRAM (MAIN)

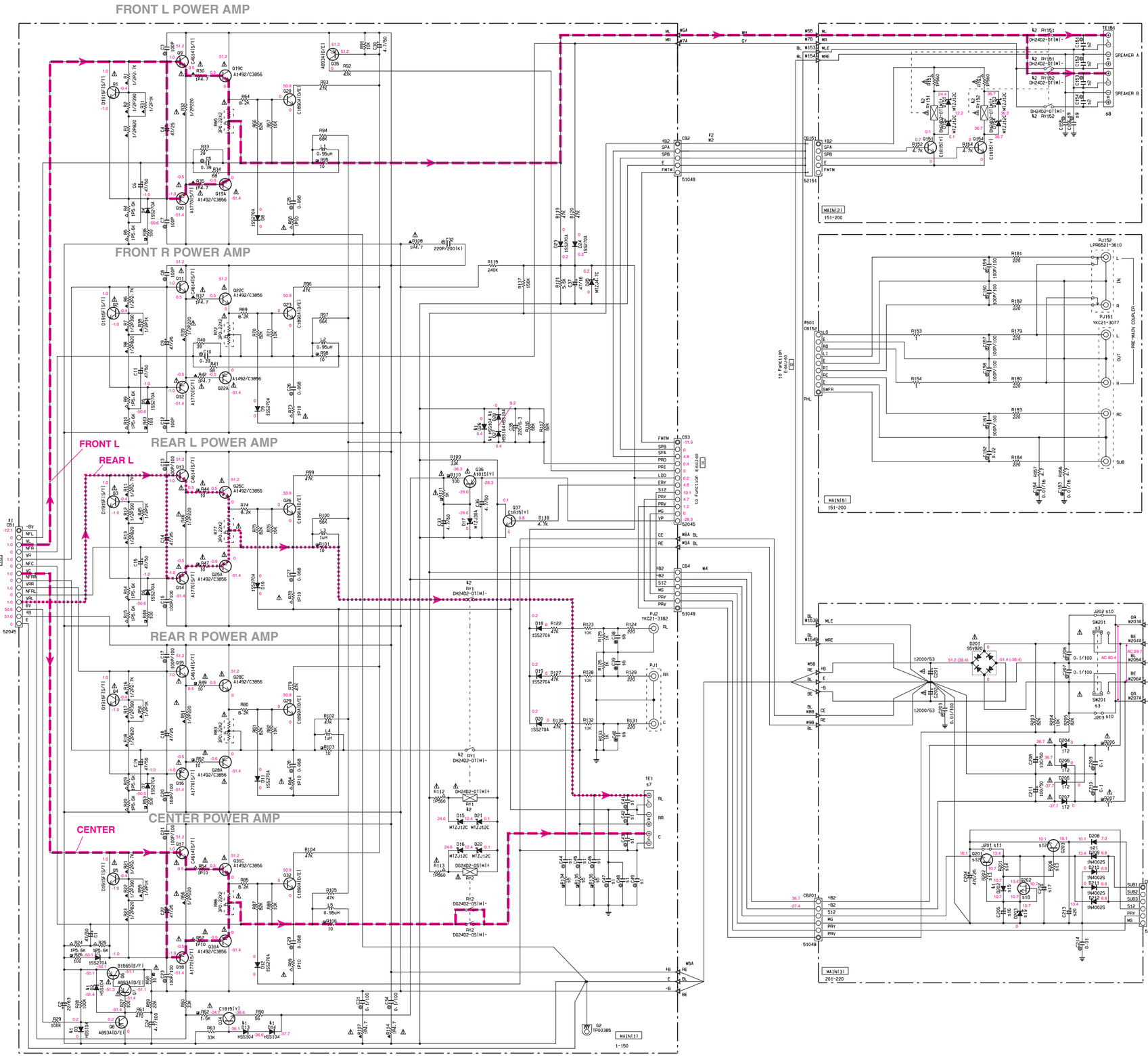

CAPACITOR

REMARKS	PARTS NAME	
NO MARK	ELECTROLYTIC CAPACITOR	
⊗	TANTALUM CAPACITOR	
NO MARK	CERAMIC CAPACITOR	
◉	CERAMIC TUBULAR CAPACITOR	
◎	POLYESTER FILM CAPACITOR	
○	POLYSTYRENE FILM CAPACITOR	
ⓘ	MICA CAPACITOR	
ⓟ	POLYPROPYLENE FILM CAPACITOR	
●	SEMICONDUCTIVE CERAMIC CAPACITOR	
Ⓢ	POLYPHENYLENE SULFIDE FILM CAPACITOR	

RESISTOR

REMARKS	PARTS NAME
NO MARK	CARBON FILM RESISTOR (P=5)
◪	CARBON FILM RESISTOR (P=10)
△	METAL OXIDE FILM RESISTOR
⚠	METAL FILM RESISTOR
⊠	METAL PLATE RESISTOR
▨	FIRE PROOF CARBON FILM RESISTOR
□	CEMENT MOLDED RESISTOR
⊘	SEMI VARIABLE RESISTOR
■	CHIP RESISTOR

NOTICE (model)
(J)····· JAPANESE
(U)····· U.S.A
(C)····· CANADIAN
(R)····· GENERAL
(A)····· AUSTRALIAN
(B)····· BRITISH
(G)····· EUROPEAN
(T)····· CHINA
(L)····· SINGAPORE

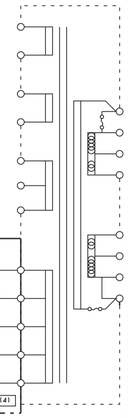

Interchangeable Parts at Manufacture-Stage

Mark	Reference Parts Number	Parts Name
⚠1	D2-3-13-14-26-27-28-202	HSS104 1SS133 1SS176
⚠2	RY1-151-152	DH24D2-OT(M) DH24D2-OT(M)-SL

S	Circuit No.	model				
		J	U-C	R-T	A	B-G-L
s1	C41-49	X	X	0-01 (UA95410)	0-01 (UA95410)	0-01 (UA95410)
s2	C151-154	X	X	4700P (V171630)	4700P (V171630)	4700P (V171630)
s3	SW201	X	SL138-022AMCS (V410420)	SL138-022AMCS (V410420)	SL138-022AMCS (V410420)	SL138-022AMCS (V410420)
s4						
s5	R134-136	X	X	4.7 (HY75347)	4.7 (HY75347)	4.7 (HY75347)
s6	C38-40	X	X	470P (VF46690)	470P (VF46690)	470P (VF46690)
s7	TE1	V591210	V591210	V591210	V591210	V591200
s8	TE151	V591230	V591230	V591230	V591230	V591220
s9	C155-156	X	X	0-01 (V171670)	0-01 (V171670)	0-01 (V171670)
s10	J202-203	O	X	X	X	X
s11	J201	O	O	X	O	O
s12	Q201-203	X	X	D2396(J/K) VR61080	X	X
s13	R202-208	X	X	100 HF45510	X	X
s14	R201	X	X	10K HF45710	X	X
s15	Q202	X	X	VD63160	X	X
s16	C205	X	X	10/25 UU14710	X	X
s17	C212	X	X	10/100 UR89710	X	X
s18	Q202	X	X	K2461(Y) IE10062	X	X
s19	D203	X	X	MTZJ11B VG43990	X	X
s20	C213	X	X	10/50 UU16710	X	X
s21	D208	X	X	1N4002S VY30770	X	X

X: NOT USED
O: USED / APPLICABLE

★ All voltage are measured with a 10M /V DC electric volt meter.
★ Components having special characteristics are marked ⚠ and must be replaced with parts having specifications equal to those originally installed.
★ Schematic diagram is subject to change without notice.

● 電圧は、内部抵抗10MΩの電圧計で測定したものです。
● ⚠印のある部品は、安全性確保部品を示しています。部品の交換が必要な場合、パーツリストに記載されている部品を使用してください。
● 本回路図は標準回路図です。改良のため予告なく変更することがございます。

■ SCHEMATIC DIAGRAM (POWER)

RESISTOR

REMARKS	PARTS NAME
NO MARK	CARBON FILM RESISTOR (P=5)
☑	CARBON FILM RESISTOR (P=10)
△	METAL OXIDE FILM RESISTOR
▲	METAL FILM RESISTOR
⊠	METAL PLATE RESISTOR
◪	FIRE PROOF CARBON FILM RESISTOR
□	CEMENT MOLDED RESISTOR
⊘	SEMI VARIABLE RESISTOR
■	CHIP RESISTOR

CAPACITOR

REMARKS	PARTS NAME	
NO MARK	ELECTROLYTIC CAPACITOR	
⊗	TANTALUM CAPACITOR	
NO MARK	CERAMIC CAPACITOR	
◉	CERAMIC TUBULAR CAPACITOR	
◎	POLYESTER FILM CAPACITOR	
○	POLYSTYRENE FILM CAPACITOR	
Ⓘ	MICA CAPACITOR	
⊛	POLYPROPYLENE FILM CAPACITOR	
◉	SEMICONDUCTIVE CERAMIC CAPACITOR	
Ⓢ	POLYPHENYLENE SULFIDE FILM CAPACITOR	

NOTICE (model)
(J)····· JAPANESE
(U)····· U.S.A
(C)····· CANADIAN
(R)····· GENERAL
(A)····· AUSTRALIAN
(B)····· BRITISH
(G)····· EUROPEAN
(T)····· CHINA
(L)····· SINGAPORE

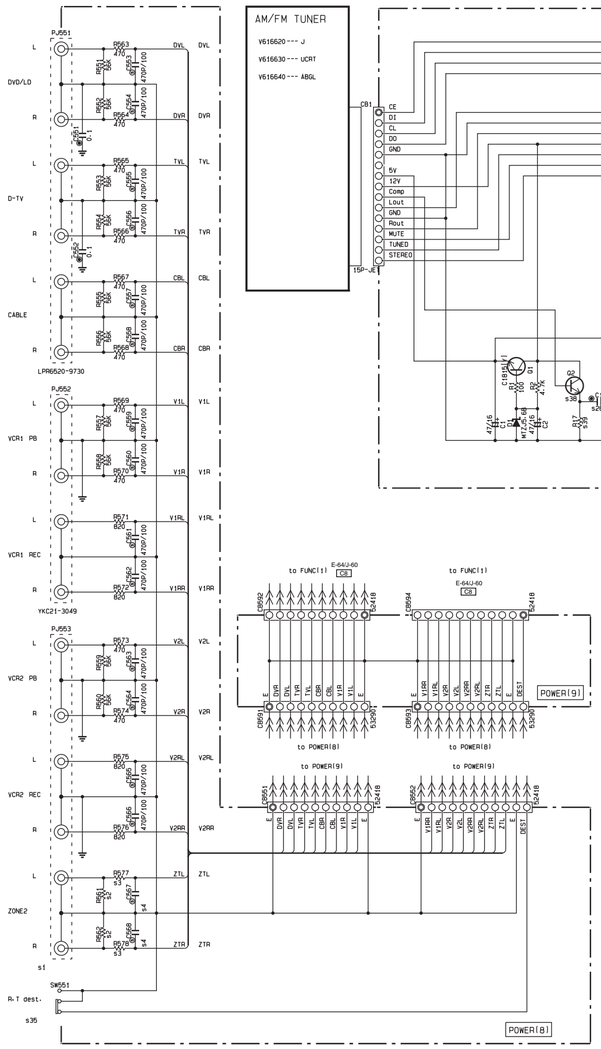

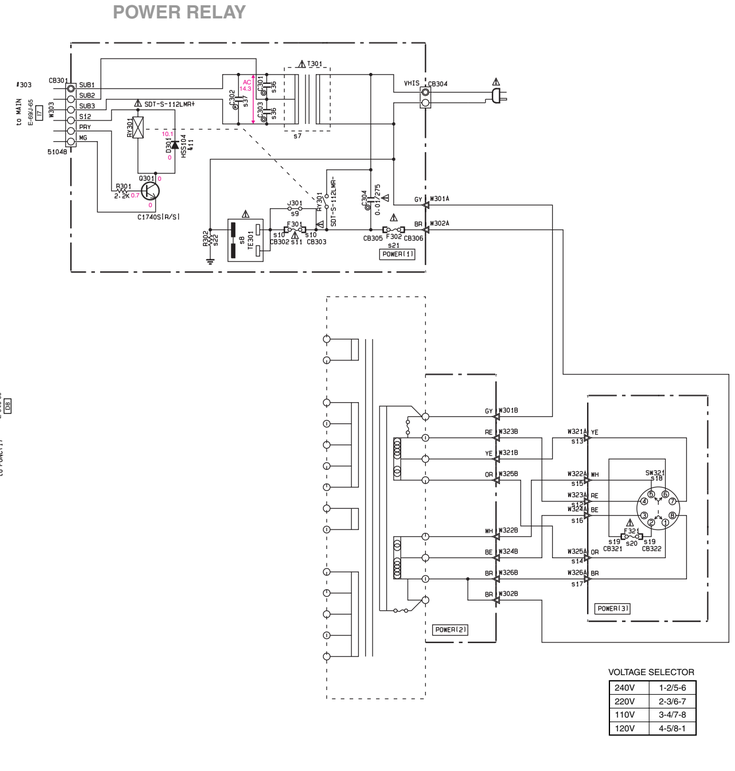

VOLTAGE SELECTOR

240V	1-2/5-6
220V	2-3/6-7
110V	3-4/7-8
120V	4-5/8-1

Interchangeable Parts at Manufacture-Stage

Mark	Reference Parts Number	Parts Name
&11	D301	1SS133 HSS176 HSS104
&12		
&13		
&14		
&15		
&16		

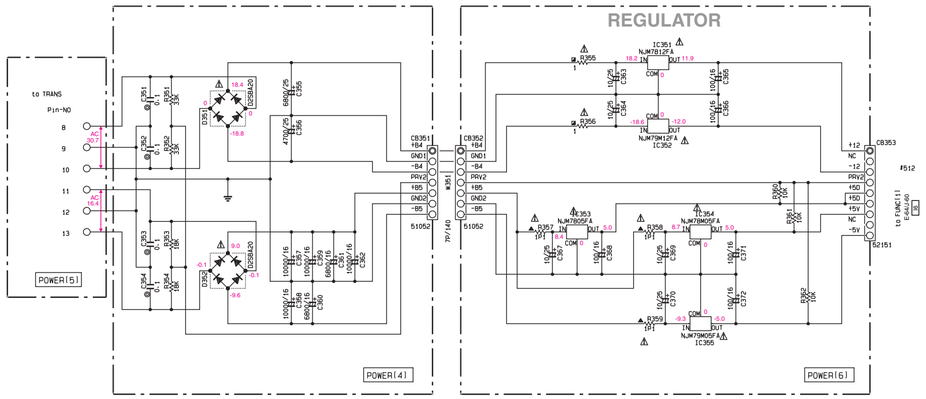

		J V623470	U·C V623480	R·T V623490	A V623500	B V623510	G V623520	L V623530
s1	PJ553	VJ69630	Y419910	Y419910	Y419910	VJ69630	VJ69630	Y419910
s2	R561·562	X	56K HF45756	56K HF45756	56K HF45756	X	X	56K HF45756
s3	R577·578	X	470 HF45547	470 HF45547	470 HF45547	X	X	470 HF45547
s4	C567·568	X	470P/100 UP65247	470P/100 UP65247	470P/100 UP65247	X	X	470P/100 UP65247
s5								
s6								
s7	T301	XZ227	XZ228	XZ229	XZ230	XZ231	XZ231	XZ231
s8	TE301	VU54310	VU54310	V586740	VT91500	VU54330	VU54340	VU54340
s9	J301	0	0	0	0	0	X	X
s10	CB302·303	X	X	X	X	X	VP20650	VP20650
s11	F301	X	X	X	X	X	T2.5AH250V YT94290	T2.5AH250V YT94290
s12	W323	X	X	MH02625	X	X	X	X
s13	W321	X	X	MH04625	X	X	X	X
s14	W325	X	X	MH03625	X	X	X	X
s15	W322	X	X	MH09625	X	X	X	X
s16	W324	X	X	MH06625	X	X	X	X
s17	W326	X	X	MH01625	X	X	X	X
s18	SW321	X	X	YA96180	X	X	X	X
s19	CB321·322	X	X	VP20650	X	X	X	X
s20	F321	X	X	T4AL250V KB00079	X	X	X	X
s21	F302	8A125V VS82330	8A125V VS82330	8A125V VS82330	T4AL250V KB00079	T4AL250V KB00079	T4AL250V KB00079	T4AL250V KB00079
s22	R302	X	1/2P2·2M HG30922	X	X	X	X	X
s23	IC1	X	X	X	X	LC72722 XY5344A0	LC72722 XY5344A0	X
s24	XL1	X	X	X	X	4.332MHz Y393090	4.332MHz Y393090	X
s25	C16·17	X	X	X	X	27PCH YA76110	27PCH YA76110	X
s26	C11·12	X	X	X	X	330P VG27860	330P VG27860	X
s27	C13	X	X	X	X	560P VG27880	560P VG27880	X
s28	C18	X	X	X	X	0.047/16 V.J59900	0.047/16 V.J59900	X
s29	C14·15·19	X	X	X	X	47/16 UU13747	47/16 UU13747	X
s30	R12	X	X	X	X	100 HF45510	100 HF45510	X
s31	R15·16	X	X	X	X	470 HF45547	470 HF45547	X
s32	R13·14	X	X	X	X	10K HF45710	10K HF45710	X
s33	R11	X	X	X	X	22K HF45722	22K HF45722	X
s34	L1	X	X	X	X	220uH Y154610	220uH Y154610	X
s35	SW551	X	X	SS029- P2022BJ6-PA6 YY81170	X	X	X	X
s36	C301·303	X	X	0.01 Y171670	X	X	X	X
s37	C302	0.01/100 VL88460	0.01/100 VL88460	X	0.01/100 VL88460	0.01/100 VL88460	0.01/100 VL88460	0.01/100 VL88460
s38	Q2	X	X	X	X	C1740S[R/S] IC17402	C1740S[R/S] IC17402	X
s39	R17	X	X	X	X	3.3K HF45633	3.3K HF45633	X

x: NOT USED
O: USED / APPLICABLE

IC1: LC72722
RDS Decoder

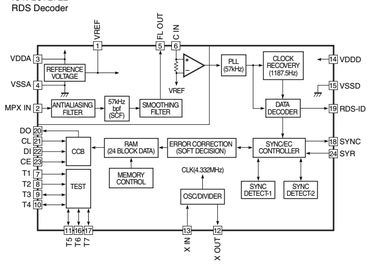

IC351: NJM7812FA
IC353: NJM7805FA
Voltage Regulator

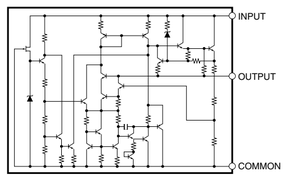

IC352: NJM79M12FA
IC355: NJM79M05FA
Voltage Regulator

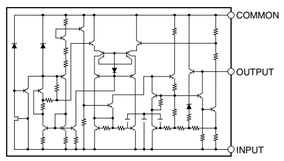

IC354: NJM78M05FA
Voltage Regulator

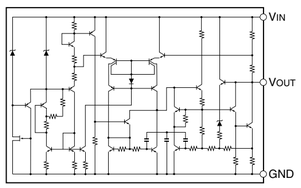

★ All voltage are measured with a 10M /V DC electric volt meter.
★ Components having special characteristics are marked ⚠ and must be replaced with parts having specifications equal to those originally installed.
★ Schematic diagram is subject to change without notice.

● 電圧は、内部抵抗10MΩの電圧計で測定したものです。
● ⚠印のある部品は、安全性確保部品を示しています。部品の交換が必要な場合、パーツリストに記載されている部品を使用してください。
● 本回路図は標準回路図です。改良のため予告なく変更することがございます。

PARTS LIST

■ ELECTRICAL PARTS

■ **WARNING**

Components having special characteristics are marked ⚠ and must be replaced with parts having specifications equal to those originally installed.

- Carbon resistors (1/6W or 1/4W) are not included in the ELECTRICAL PARTS List. For the parts No. of the carbon resistors, refer to last page.

ABBREVIATIONS IN THIS LIST ARE AS FOLLOWS:

C.A.EL.CHP	: CHIP ALUMI.ELECTROLYTIC CAP
C.CE	: CERAMIC CAP
C.CE.ARRAY	: CERAMIC CAP ARRAY
C.CE.CHP	: CHIP CERAMIC CAP
C.CE.ML	: MULTILAYER CERAMIC CAP
C.CE.M.CHP	: CHIP MULTILAYER CERAMIC CAP
C.CE.SAFTY	: RECOGNIZED CERAMIC CAP
C.CE.TUBLR	: CERAMIC TUBULAR CAP
C.CE.SMI	: SEMI CONDUCTIVE CERAMIC CAP
C.EL	: ELECTROLYTIC CAP
C.MICA	: MICA CAP
C.ML.FLM	: MULTILAYER FILM CAP
C.MP	: METALLIZED PAPER CAP
C.MYLAR	: MYLAR FILM CAP
C.MYLAR.ML	: MULTILAYER MYLAR FILM CAP
C.PAPER	: PAPER CAPACITOR
C.PLS	: POLYSTYRENE FILM CAP
C.POL	: POLYESTER FILM CAP
C.POLY	: POLYETHYLENE FILM CAP
C.PP	: POLYPROPYLENE FILM CAP
C.TNTL	: TANTALUM CAP
C.TNTL.CHP	: CHIP TANTALUM CAP
C.TRIM	: TRIMMER CAP
CN	: CONNECTOR
CN.BS.PIN	: CONNECTOR,BASE PIN
CN.CANNON	: CONNECTOR,CANNON
CN.DIN	: CONNECTOR,DIN
CN.FLAT	: CONNECTOR,FLAT CABLE
CN.POST	: CONNECTOR,BASE POST
COIL.MX.AM	: COIL,AM MIX
COIL.AT.FM	: COIL,FM ANTENNA
COIL.DT.FM	: COIL,FM DETECT
COIL.MX.FM	: COIL,FM MIX
COIL,OUTPT	: OUTPUT COIL
DIOD.ARRAY	: DIODE ARRAY
DIODE.BRG	: DIODE BRIDGE
DIODE.CHP	: CHIP DIODE
DIODE.VAR	: VARACTOR DIODE
DIOD.Z.CHP	: CHIP ZENER DIODE
DIODE.ZENR	: ZENER DIODE
DSCR.CE	: CERAMIC DISCRIMINATOR
FER.BEAD	: FERRITE BEADS
FER.CORE	: FERRITE CORE
FET.CHP	: CHIP FET
FL.DSPLY	: FLUORESCENT DISPLAY
FLTR.CE	: CERAMIC FILTER
FLTR.COMB	: COMB FILTER MODULE
FLTR.LC.RF	: LC FILTER,EMI
GND.MTL	: GROUND PLATE
GND.TERM	: GROUND TERMINAL
HOLDER.FUS	: FUSE HOLDER
IC.PRTCT	: IC PROTECTOR
JUMPER.CN	: JUMPER CONNECTOR
JUMPER.TST	: JUMPER,TEST POINT
L.DTCT	: LIGHT DETECTING MODULE
L.EMIT	: LIGHT EMITTING MODULE
LED.DSPLY	: LED DISPLAY
LED.INFRD	: LED,INFRARED
MODUL.RF	: MODULATOR,RF
PHOT.CPL	: PHOTO COUPLER
PHOT.INTR	: PHOTO INTERRUPTER
PHOT.RFLCT	: PHOTO REFLECTOR
PIN.TEST	: PIN,TEST POINT
PLST.RIVET	: PLASTIC RIVET
R.ARRAY	: RESISTOR ARRAY
R.CAR.	: CARBON RESISTOR
R.CAR.CHP	: CHIPRESISTOR
R.CAR.FP	: FLAME PROOF CARBON RESISTOR
R.FUS	: FUSABLE RESISTOR
R.MTL.CHP	: CHIP METAL FILM RESISTOR
R.MTL.FLM	: METAL FILM RESISTOR
R.MTL.OXD	: METAL OXIDE FILM RESISTOR
R.MTL.PLAT	: METAL PLATE RESISTOR
RSNR.CE	: CERAMIC RESONATOR
RSNR.CRYS	: CRYSTAL RESONATOR
R.TW.CEM	: TWIN CEMENT FIXED RESISTOR
R.WW	: WIRE WOUND RESISTOR
SCR.BND.HD	: BIND HEAD B-TITE SCREW
SCR.BW.HD	: BW HEAD TAPPING SCREW
SCR.CUP	: CUP TITE SCREW
SCR.TERM	: SCREW TERMINAL
SCR.TR	: SCREW,TRANSISTOR
SUPRT.PCB	: SUPPORT,P.C.B.
SURG.PRTCT	: SURGE PROTECTOR
SW.TACT	: TACT SWITCH
SW.LEAF	: LEAF SWITCH
SW.LEVER	: LEVER SWITCH
SW.MICRO	: MICRO SWITCH
SW.PUSH	: PUSH SWITCH
SW.RT.ENC	: ROTARY ENCODER
SW.RT.MTR	: ROTARY SWITCH WITH MOTOR
SW.RT	: ROTARY SWITCH
SW.SLIDE	: SLIDE SWITCH
TERM.SP	: SPEAKER TERMINAL
TERM.WRAP	: WRAPPING TERMINAL
THRMST.CHP	: CHIP THERMISTOR
TR.CHP	: CHIP TRANSISTOR
TR.DGT	: DIGITAL TRANSISTOR
TR.DGT.CHP	: CHIP DIGITAL TRANSISTOR
TRANS	: TRANSFORMER
TRANS.PULS	: PULSE TRANSFORMER
TRANS.PWR	: POWER TRANSFORMER ASS'Y
TUNER.AM	: TUNER PACK,AM
TUNER.FM	: TUNER PACK,FM
TUNER.PK	: FRONT-ENDTUNER PACK
VR	: ROTARY POTENTIOMETER
VR.MTR	: POTENTIOMETER WITH MOTOR
VR.SW	: POTENTIOMETER WITH ROTARY SW
VR.SLIDE	: SLIDE POTENTIOMETER
VR.TRIM	: TRIMMER POTENTIOMETER

Note) Those parts marked with "#" are not included in the P.C.B. ass'y.

P.C.B. FUNCTION

Schm Ref.	PART NO.	Description		
*	V6242000	P.C.B.	FUNCTION(UC)	
*	V6242100	P.C.B.	FUNCTION(RT)	
*	V6242200	P.C.B.	FUNCTION(AL)	
*	V6242300	P.C.B.	FUNCTION(BG)	
CB501	VQ963100	CN.BS.PIN	10P	
CB502	VQ048000	CN.BS.PIN	31P	
CB503	VQ963200	CN.BS.PIN	11P	
CB505	VQ961800	CN.BS.PIN	15P	
CB507	VF982300	CN.BS.PIN	17P	
CB508	VQ044500	CN.BS.PIN	11P	
CB509	VM859500	CN.BS.PIN	11P	
CB510	VN066500	CN.BS.PIN	12P	
CB511	VQ044500	CN.BS.PIN	11P	
CB512	Vi878700	CN.BS.PIN	9P	
CB513	VQ047300	CN.BS.PIN	12P	
CB514	VQ044900	CN.BS.PIN	19P	
C501	US135100	C.CE.CHP	0.1uF	16V
C502	VD930900	C.CE.SMI	0.1uF	25V
C503	UP652220	C.POL	220pF	100V(ALBG)
C504	UP652220	C.POL	220pF	100V(ALBG)
C505	UP652470	C.POL	470pF	100V
C506	UP652470	C.POL	470pF	100V
C507	UP652470	C.POL	470pF	100V
C508	UP652470	C.POL	470pF	100V
C509	UP652470	C.POL	470pF	100V
C510	UP652470	C.POL	470pF	100V
C511	UP652470	C.POL	470pF	100V
C512	UP652470	C.POL	470pF	100V
C513	UP652470	C.POL	470pF	100V
C514	UP652470	C.POL	470pF	100V
C515	UU166100	C.EL	1uF	50V
C516	UP652220	C.POL	220pF	100V
C517	UU118220	C.EL	220uF	6.3V
C518	UP652220	C.POL	220pF	100V
C519	UU118220	C.EL	220uF	6.3V
C520	UU166100	C.EL	1uF	50V
C521	UP652470	C.POL	470pF	100V
C522	UP652470	C.POL	470pF	100V
C523	UU166470	C.EL	4.7uF	50V
C524	UP652470	C.POL	470pF	100V
C525	UP652470	C.POL	470pF	100V
C526	UU166470	C.EL	4.7uF	50V
C527	UP652470	C.POL	470pF	100V
C528	UP652470	C.POL	470pF	100V
C529	UU166470	C.EL	4.7uF	50V
C530	UU166220	C.EL	2.2uF	50V
C531	UP652100	C.POL	100pF	100V
C532	UP652100	C.POL	100pF	100V
C533	UU166220	C.EL	2.2uF	50V
C534	UU147100	C.EL	10uF	25V
C535	UA653100	C.MYLAR	1000pF	50V
C536	UA654390	C.MYLAR	0.039uF	50V
C537	UA654110	C.MYLAR	0.011uF	50V
C538	UA654390	C.MYLAR	0.039uF	50V
C539	UA654110	C.MYLAR	0.011uF	50V
C540	UA653100	C.MYLAR	1000pF	50V
C541	UU147100	C.EL	10uF	25V
C542	UU147100	C.EL	10uF	25V
C543	UU137470	C.EL	47uF	16V
C544	UU137470	C.EL	47uF	16V
C545	UU147100	C.EL	10uF	25V
C546	UU147100	C.EL	10uF	25V
C547	UU147100	C.EL	10uF	25V

* New Parts

Schm Ref.	PART NO.	Description		
C548	UU147100	C.EL	10uF	25V(UCRTAL)
C549	UU147100	C.EL	10uF	25V(UCRTAL)
C550	UU147100	C.EL	10uF	25V
C551	UU138100	C.EL	100uF	16V
C552	UU138100	C.EL	100uF	16V
C553	UU166470	C.EL	4.7uF	50V
C554	UU166470	C.EL	4.7uF	50V
C555	UP652100	C.POL	100pF	100V
C556	UP652100	C.POL	100pF	100V
C557	UU166470	C.EL	4.7uF	50V
C558	UU166470	C.EL	4.7uF	50V
C559	UU147100	C.EL	10uF	25V
C560	UU147100	C.EL	10uF	25V
C561	UU147100	C.EL	10uF	25V
C562	UU147100	C.EL	10uF	25V
C563	UU137470	C.EL	47uF	16V
C564	UU137470	C.EL	47uF	16V
C565	UU137220	C.EL	22uF	16V
C566	UP654270	C.POL	0.027uF	100V
C567	UP654270	C.POL	0.027uF	100V
C568	UU137220	C.EL	22uF	16V
C569	UU147100	C.EL	10uF	25V
C573	US135100	C.CE.CHP	0.1uF	16V
C574	UU166220	C.EL	2.2uF	50V(UCRTAL)
C575	US135100	C.CE.CHP	0.1uF	16V
C576	UP654270	C.POL	0.027uF	100V
C577	UP652100	C.POL	100pF	100V
C578	UP652100	C.POL	100pF	100V
C579	UP654270	C.POL	0.027uF	100V
C580	UU137470	C.EL	47uF	16V
C581	UU137470	C.EL	47uF	16V
C582	UU147100	C.EL	10uF	25V
C583	UU147100	C.EL	10uF	25V
C584	UU147100	C.EL	10uF	25V
C585	UU147100	C.EL	10uF	25V
C586	US135100	C.CE.CHP	0.1uF	16V
C587	UU137470	C.EL	47uF	16V
C588	UU147100	C.EL	10uF	25V
C589	US135100	C.CE.CHP	0.1uF	16V
C590	UU147100	C.EL	10uF	25V
C591	UU147100	C.EL	10uF	25V
C592	US135100	C.CE.CHP	0.1uF	16V
C593	UU147100	C.EL	10uF	25V
C594	UU147100	C.EL	10uF	25V
C595	US135100	C.CE.CHP	0.1uF	16V
C596	UU147100	C.EL	10uF	25V
C597	US135100	C.CE.CHP	0.1uF	16V
C600	US135100	C.CE.CHP	0.1uF	16V
C601	US135100	C.CE.CHP	0.1uF	16V
C602	US135100	C.CE.CHP	0.1uF	16V
C603	US063100	C.CE.M.CHP	1000pF	50V
C605	US135100	C.CE.CHP	0.1uF	16V
C606	US135100	C.CE.CHP	0.1uF	16V
C607	UU165470	C.EL	0.47uF	50V
C608	US135100	C.CE.CHP	0.1uF	16V
C609	UP652100	C.POL	100pF	100V
C610	US135100	C.CE.CHP	0.1uF	16V
C611	UP652100	C.POL	100pF	100V
C612	UU147100	C.EL	10uF	25V
C613	UU147100	C.EL	10uF	25V
C614	US135100	C.CE.CHP	0.1uF	16V
C615	UU147100	C.EL	10uF	25V
C616	UU147100	C.EL	10uF	25V

* New Parts

P.C.B. FUNCTION

Schm Ref.	PART NO.	Description		
C617	US135100	C.CE.CHP	0.1uF	16V
C618	US135100	C.CE.CHP	0.1uF	16V
C619	UP652100	C.POL	100pF	100V
C620	UP652100	C.POL	100pF	100V
C621	US135100	C.CE.CHP	0.1uF	16V
C622	US135100	C.CE.CHP	0.1uF	16V
C623	US135100	C.CE.CHP	0.1uF	16V
C624	US135100	C.CE.CHP	0.1uF	16V
C625	US135100	C.CE.CHP	0.1uF	16V
C626	UU137470	C.EL	47uF	16V
C627	UU137470	C.EL	47uF	16V
C628	UU147100	C.EL	10uF	25V
C629	UU147100	C.EL	10uF	25V
C630	UU147100	C.EL	10uF	25V
C631	UR848220	C.EL	220uF	25V(RT)
C631	UR848470	C.EL	470uF	25V(UCALBG)
C632	UU137470	C.EL	47uF	16V
C633	V3860300	C.BACK UP	0.047F	5.5V
C634	US135100	C.CE.CHP	0.1uF	16V
C635	UU137470	C.EL	47uF	16V
C636	UU137470	C.EL	47uF	16V
C637	UP652100	C.POL	100pF	100V
C638	UU137470	C.EL	47uF	16V
C639	UU137470	C.EL	47uF	16V
C640	UP652100	C.POL	100pF	100V
C641	UU118100	C.EL	100uF	6.3V
C642	US135100	C.CE.CHP	0.1uF	16V
C643	UU118100	C.EL	100uF	6.3V
C644	US135100	C.CE.CHP	0.1uF	16V
C645	UU119100	C.EL	1000uF	6.3V
C646	US135100	C.CE.CHP	0.1uF	16V
C647	UU119100	C.EL	1000uF	6.3V
C648	UU137470	C.EL	47uF	16V
C649	UU137470	C.EL	47uF	16V
C650	UU147100	C.EL	10uF	25V
C651	UU147100	C.EL	10uF	25V
C652	UP652100	C.POL	100pF	100V
C653	UU147100	C.EL	10uF	25V
C654	UU147100	C.EL	10uF	25V
C655	US135100	C.CE.CHP	0.1uF	16V
C656	US135100	C.CE.CHP	0.1uF	16V
C658	UU166220	C.EL	2.2uF	50V
C659	UU166220	C.EL	2.2uF	50V
C660	UU166220	C.EL	2.2uF	50V
C661	UU166220	C.EL	2.2uF	50V
C662	UU118100	C.EL	100uF	6.3V
C663	UU166220	C.EL	2.2uF	50V
C664	UU166220	C.EL	2.2uF	50V
C665	US135100	C.CE.CHP	0.1uF	16V
C666	US063100	C.CE.M.CHP	1000pF	50V
C667	US063100	C.CE.M.CHP	1000pF	50V
C668	US135100	C.CE.CHP	0.1uF	16V
C670	US135100	C.CE.CHP	0.1uF	16V(UC)
C671	US135100	C.CE.CHP	0.1uF	16V(UC)
C672	US135100	C.CE.CHP	0.1uF	16V(UC)
D501	VV220700	DIODE.SHOT	RB501V-40	
D502	VV220700	DIODE.SHOT	RB501V-40	
D503	VV220700	DIODE.SHOT	RB501V-40	
D504	VV220700	DIODE.SHOT	RB501V-40	
D505	VV220700	DIODE.SHOT	RB501V-40	
D506	VV220700	DIODE.SHOT	RB501V-40	
D507	VV220700	DIODE.SHOT	RB501V-40	
D508	VV220700	DIODE.SHOT	RB501V-40	

⁎ New Parts

Schm Ref.	PART NO.	Description	
D509	VV220700	DIODE.SHOT	RB501V-40
D510	VV220700	DIODE.SHOT	RB501V-40
D511	VV220700	DIODE.SHOT	RB501V-40
D512	VV220700	DIODE.SHOT	RB501V-40
D515	VV220700	DIODE.SHOT	RB501V-40
D516	VV220700	DIODE.SHOT	RB501V-40
D517	VD631600	DIODE	1SS133,176
D518	VG438200	DIODE.ZENR	MTZJ6.8A 6.8V
D519	VT332900	DIODE	1SS355
D520	VD631600	DIODE	1SS133,176
D521	VD631600	DIODE	1SS133,176
D522	VD631600	DIODE	1SS133,176
D523	VT332900	DIODE	1SS355
D524	VG437700	DIODE.ZENR	MTZJ5.6B 5.6V
D525	VG437700	DIODE.ZENR	MTZJ5.6B 5.6V
D526	VT332900	DIODE	1SS355
D527	VG437300	DIODE.ZENR	MTZJ5.1A 5.1V
D528	VT332900	DIODE	1SS355
D530	VG437300	DIODE.ZENR	MTZJ5.1A 5.1V
IC501	XJ553A00	IC	NJM2068MD
IC502	XP895A00	IC	LC78212
IC503	XP894A00	IC	LC78211
IC504	XP895A00	IC	LC78212
IC505	XP896A00	IC	LC78213
IC506	XF291A00	IC	uPC4570G2
IC507	XF291A00	IC	uPC4570G2
IC508	XF291A00	IC	uPC4570G2
IC511	XF291A00	IC	uPC4570G2
IC512	XP894A00	IC	LC78211
IC513	XF291A00	IC	uPC4570G2
IC514	XF291A00	IC	uPC4570G2
IC515	XF291A00	IC	uPC4570G2
IC516	XW173A00	IC	CS3310-KS
IC518	XW173A00	IC	CS3310-KS
IC519	XW173A00	IC	CS3310-KS
IC520	XW173A00	IC	CS3310-KS
IC521	XF291A00	IC	uPC4570G2
IC522	XP896A00	IC	LC78213
IC523	XF291A00	IC	uPC4570G2
IC524	XF291A00	IC	uPC4570G2
IC525	XF291A00	IC	uPC4570G2
IC526	XY892A00	IC.CPU	M30802SGP CPU
IC527	XZ450B00	IC	MBM29F400BC-70 FLA
IC528	XA507A00	IC	AN78N05
PJ501	V3855600	JACK.PIN	4P
PJ502	V3855600	JACK.PIN	4P
PJ503	V4198900	JACK.PIN	4P LPR6520-B71
PJ504	V4199200	JACK.PIN	6P
PN501	V3750200	PIN	L=70
Q501	VD303700	TR	2SC3326 A,B
Q502	VD303700	TR	2SC3326 A,B
Q503	VD303700	TR	2SC3326 A,B
Q504	VD303700	TR	2SC3326 A,B
Q505	VD303700	TR	2SC3326 A,B(UCRTAL)
Q506	VD303700	TR	2SC3326 A,B(UCRTAL)
Q507	VV556500	TR.CHP	2SA1037 QRS(UCAL)
Q508	VV556500	TR.CHP	2SA1037 QRS(UCAL)
Q509	VV556500	TR.CHP	2SA1037 Q,R,S
Q510	VV655700	TR.DGT	DTC144EKA
Q511	VP872700	TR	2SC4488 S,T
Q512	VD303700	TR	2SC3326 A,B
Q513	VD303700	TR	2SC3326 A,B
Q514	VP872600	TR	2SA1708 S,T

⁎ New Parts

P.C.B. FUNCTION & P.C.B. OPERATION

Schm Ref.	PART NO.	Description	
Q515	VD303700	TR	2SC3326 A,B
Q516	VD303700	TR	2SC3326 A,B
Q517	VD303700	TR	2SC3326 A,B
Q518	VD303700	TR	2SC3326 A,B
Q519	VD303700	TR	2SC3326 A,B
Q520	VD303700	TR	2SC3326 A,B
Q521	VD303700	TR	2SC3326 A,B
Q522	VD303700	TR	2SC3326 A,B
Q523	VD303700	TR	2SC3326 A,B
Q524	VD303700	TR	2SC3326 A,B
Q525	VD303700	TR	2SC3326 A,B
Q526	VD303700	TR	2SC3326 A,B
Q527	VD303700	TR	2SC3326 A,B
Q528	VD303700	TR	2SC3326 A,B
Q529	VD303700	TR	2SC3326 A,B
Q530	VD303700	TR	2SC3326 A,B
Q531	VV556500	TR.CHP	2SA1037 Q,R,S
Q532	VV556500	TR.CHP	2SA1037 Q,R,S
Q533	VV556500	TR.CHP	2SA1037 Q,R,S
Q534	VV556500	TR.CHP	2SA1037 Q,R,S
Q535	VV556500	TR.CHP	2SA1037 Q,R,S
Q536	VV556500	TR.CHP	2SA1037 Q,R,S
Q537	VV556500	TR.CHP	2SA1037 Q,R,S
Q538	VV556500	TR.CHP	2SA1037 Q,R,S
Q539	VV556500	TR.CHP	2SA1037 Q,R,S
Q540	VV556500	TR.CHP	2SA1037 Q,R,S
Q541	VV556500	TR.CHP	2SA1037 Q,R,S
Q542	VV556500	TR.CHP	2SA1037 Q,R,S
Q543	VV556500	TR.CHP	2SA1037 Q,R,S
Q544	VV556500	TR.CHP	2SA1037 Q,R,S
Q545	VV655700	TR.DGT	DTC144EKA
R563	RD357330	R.MTL.CHP	33KΩ 1/10W(UCRTAL)
R565	RD357330	R.MTL.CHP	33KΩ 1/10W(UCRTAL)
R567	HV755100	R.CAR.FP	100Ω 1/4W
R568	HV755100	R.CAR.FP	100Ω 1/4W
R650	HV753220	R.CAR.FP	2.2Ω 1/4W
R651	HV753220	R.CAR.FP	2.2Ω 1/4W
R672	HV754100	R.CAR.FP	10Ω 1/4W
R722	HV753220	R.CAR.FP	2.2Ω 1/4W
R723	HV753220	R.CAR.FP	2.2Ω 1/4W
R817	HV753220	R.CAR.FP	2.2Ω 1/4W
ST501	V4040500	SCR.TERM	M3
ST502	V4040500	SCR.TERM	M3
XL501	VT630600	RSNR.CE	16MHz CST
*	V6292400	P.C.B.	OPERATION(UCRTAL)
*	V6292500	P.C.B.	OPERATION(BG)
CB801	VM973500	CN.BS.PIN	17P
CB802	Vi878200	CN.BS.PIN	4P
CB804	Vi878100	CN.BS.PIN	3P
CB805	Vi878100	CN.BS.PIN	3P
CB901	Vi878500	CN.BS.PIN	7P
CB902	VQ044900	CN.BS.PIN	19P
CB941	Vi878100	CN.BS.PIN	3P
CB961	VK026200	CN.BS.PIN	3P
CB962	VK026600	CN.BS.PIN	7P
CB971	V5478200	CN.PHOT.SN	1P GP1FA551RZ
CB972	VQ044500	CN.BS.PIN	11P
CB973	Vi878200	CN.BS.PIN	4P
CB974	VB389800	CN.BS.PIN	2P
C801	UU137470	C.EL	47uF 16V

* New Parts

Schm Ref.	PART NO.	Description		
C802	UU137470	C.EL	47uF	16V
C803	UU137470	C.EL	47uF	16V
C804	UU137470	C.EL	47uF	16V
C805	UU165100	C.EL	0.1uF	50V
C806	UU165100	C.EL	0.1uF	50V
C807	UU165100	C.EL	0.1uF	50V
C808	UU165100	C.EL	0.1uF	50V
C809	UU166100	C.EL	1uF	50V
C810	UU166100	C.EL	1uF	50V
C811	UU166220	C.EL	2.2uF	50V
C812	UU166220	C.EL	2.2uF	50V
C813	VQ645600	C.MYLAR	100pF	50V
C814	VQ645600	C.MYLAR	100pF	50V
C815	UU137470	C.EL	47uF	16V
C816	UU137470	C.EL	47uF	16V
C817	UA655120	C.MYLAR	0.12uF	50V
C818	UA655120	C.MYLAR	0.12uF	50V
C819	UA954330	C.MYLAR	0.033uF	50V
C820	UA954330	C.MYLAR	0.033uF	50V
C821	UU137100	C.EL	10uF	16V
C822	UU137100	C.EL	10uF	16V
C823	UU137470	C.EL	47uF	16V
C824	UU137470	C.EL	47uF	16V
C825	UU137100	C.EL	10uF	16V
C826	UU137100	C.EL	10uF	16V
C827	UA952100	C.MYLAR	100pF	50V
C828	UA952100	C.MYLAR	100pF	50V
C829	UA952100	C.MYLAR	100pF	50V
C830	UA952100	C.MYLAR	100pF	50V
C831	UU137470	C.EL	47uF	16V
C832	UU137470	C.EL	47uF	16V
C833	VG276600	C.CE.TUBLR	22pF	50V
C834	VG276600	C.CE.TUBLR	22pF	50V
C835	UU139100	C.EL	1000uF	16V
C836	UU139100	C.EL	1000uF	16V
C837	UA655120	C.MYLAR	0.12uF	50V
C838	UA655120	C.MYLAR	0.12uF	50V
C901	VJ599100	C.CE.TUBLR	0.1uF	50V
C902	VJ599100	C.CE.TUBLR	0.1uF	50V
C903	VJ599100	C.CE.TUBLR	0.1uF	50V
C904	VJ599100	C.CE.TUBLR	0.1uF	50V
C905	UM388100	C.EL	100uF	10V
C906	VJ599100	C.CE.TUBLR	0.1uF	50V
C907	VG277000	C.CE.TUBLR	33pF	50V
C908	VJ599100	C.CE.TUBLR	0.1uF	50V
C909	VJ599100	C.CE.TUBLR	0.1uF	50V
C910	V6295600	C.EL	330uF	6.3V
C911	VJ599100	C.CE.TUBLR	0.1uF	50V
C912	VJ599100	C.CE.TUBLR	0.1uF	50V
C913	VF467000	C.CE.TUBLR	1000pF	50V
C914	VF467000	C.CE.TUBLR	1000pF	50V
C961	VJ599100	C.CE.TUBLR	0.1uF	50V
C971	VJ599100	C.CE.TUBLR	0.1uF	50V
C972	UR837470	C.EL	47uF	16V
C973	VF466900	C.CE.TUBLR	470pF	50V
C974	VF466900	C.CE.TUBLR	470pF	50V
C975	VJ599100	C.CE.TUBLR	0.1uF	50V
C976	VJ599100	C.CE.TUBLR	0.1uF	50V
C977	UA953100	C.MYLAR	1000pF	50V
C978	UA953100	C.MYLAR	1000pF	50V
C979	UA954100	C.MYLAR	0.01uF	50V
C980	UA953100	C.MYLAR	1000pF	50V
C981	VJ599100	C.CE.TUBLR	0.1uF	50V

* New Parts

P.C.B. OPERATION & P.C.B. DSP

Schm Ref.	PART NO.	Description	
C982	VJ599100	C.CE.TUBLR	0.1uF 50V
C983	VJ599100	C.CE.TUBLR	0.1uF 50V
C985	VJ599100	C.CE.TUBLR	0.1uF 50V
D801	VG439100	DIODE.ZENR	MTZJ9.1A 9.1V
D802	VG439100	DIODE.ZENR	MTZJ9.1A 9.1V
D803	VU264100	DIODE	1SR139-400
D804	VU264100	DIODE	1SR139-400
D901	VM974700	DIODE.ZENR	HZS7B2TD 7.0V
D902	V2598200	LED	SIR-505ST
D971	VG439100	DIODE.ZENR	MTZJ9.1A 9.1V
D972	VD631600	DIODE	1SS133,176
D973	VD631600	DIODE	1SS133,176
G961	VR463400	TERM.GND	D3.5 TP00385
IC801	iG001270	IC	TC4066BP
IC802	XM356A00	IC	NJM2068LD
IC803	XM356A00	IC	NJM2068LD
IC804	XP844A00	IC	NJM4556AL
IC901	XR188A00	IC	LC75710NE(UCRTAL)
IC901	XV160A00	IC	LC75712E FLD(BG)
JK971	V2589500	CN	1P
JK972	V6268100	JACK.PHONE	YKB21-XXXX
L971	V2726500	COIL	68uH
PJ971	V6222800	JACK.PIN	RJ-1086-13-0500A
PN901	V3750200	PIN	L=70
Q801	VG721700	TR.DGT	DTA144ES
Q802	VG722000	TR.DGT	DTC144ES
Q803	VK432900	TR	2SD1915F S,T
Q804	VK432900	TR	2SD1915F S,T
Q901	VV900500	TR	2SD1991A Q,R,S
Q902	VV900500	TR	2SD1991A Q,R,S
Q903	VV900500	TR	2SD1991A Q,R,S
Q904	VV900500	TR	2SD1991A Q,R,S
Q905	VV900500	TR	2SD1991A Q,R,S
Q906	VV900500	TR	2SD1991A Q,R,S
Q907	VV900500	TR	2SD1991A Q,R,S
Q908	VV900500	TR	2SD1991A Q,R,S
Q909	VV900500	TR	2SD1991A Q,R,S
Q910	VV900500	TR	2SD1991A Q,R,S
Q971	iC174020	TR	2SC1740S R,S
Q972	iA093320	TR	2SA933S Q,R
R803	VP940200	R.MTL.OXD	47Ω 1W
R804	VP940200	R.MTL.OXD	47Ω 1W
R841	VP940600	R.MTL.OXD	220Ω 1W
R842	VP940600	R.MTL.OXD	220Ω 1W
R847	VP439800	R.MTL.FLM	2.2KΩ 1/4W F
R848	VP439800	R.MTL.FLM	2.2KΩ 1/4W F
R849	VP439800	R.MTL.FLM	2.2KΩ 1/4W F
R850	VP439800	R.MTL.FLM	2.2KΩ 1/4W F
R851	VP441600	R.MTL.FLM	12KΩ 1/4W
R852	VP441600	R.MTL.FLM	12KΩ 1/4W
R853	VP441600	R.MTL.FLM	12KΩ 1/4W
R854	VP442300	R.MTL.FLM	24KΩ 1/4W F
R855	VP442300	R.MTL.FLM	24KΩ 1/4W F
R856	VP442300	R.MTL.FLM	24KΩ 1/4W F
R857	VP442300	R.MTL.FLM	24KΩ 1/4W F
R858	VP442300	R.MTL.FLM	24KΩ 1/4W F
R978	HV755100	R.CAR.FP	100Ω 1/4W
R979	HV755100	R.CAR.FP	100Ω 1/4W
ST971	V4040500	SCR.TERM	M3
ST972	V4040500	SCR.TERM	M3
ST973	V4040500	SCR.TERM	M3
* SW801	V6154000	SW.RT.ENC	SDB161PH20FS-1-4
SW901	VG392900	SW.TACT	SKHVAA

* New Parts

Schm Ref.	PART NO.	Description	
SW902	VG392900	SW.TACT	SKHVAA
SW903	V6322700	SW.RT.ENC	REB161(9X7)PVB
SW904	VG392900	SW.TACT	SKHVAA
SW905	VG392900	SW.TACT	SKHVAA
SW941	VG392900	SW.TACT	SKHVAA(BG)
SW942	VG392900	SW.TACT	SKHVAA(BG)
SW943	VG392900	SW.TACT	SKHVAA(BG)
SW944	VG392900	SW.TACT	SKHVAA(BG)
SW945	VG392900	SW.TACT	SKHVAA
SW946	VG392900	SW.TACT	SKHVAA
SW947	VG392900	SW.TACT	SKHVAA
SW948	VG392900	SW.TACT	SKHVAA
SW949	VG392900	SW.TACT	SKHVAA
SW950	VG392900	SW.TACT	SKHVAA
SW951	VG392900	SW.TACT	SKHVAA
SW952	VG392900	SW.TACT	SKHVAA
SW953	VG392900	SW.TACT	SKHVAA
SW954	VG392900	SW.TACT	SKHVAA
SW961	VG392900	SW.TACT	SKHVAA
SW962	VS066500	SW.PUSH	SPPH13-W
SW963	VS066500	SW.PUSH	SPPH13-W
SW964	VG392900	SW.TACT	SKHVAA
SW965	VG392900	SW.TACT	SKHVAA
U901	VU591000	L.DTCT	GP1U271X
V901	V5917600	FL.DSPLY	16-BT-81GK
VR801	VP741800	VR	B20KΩ
VR802	VP741900	VR	G25KΩ
	V6007100	SPACER	4.6/10/32
	V6007000	SHEET	
* * *	V6235900	P.C.B.	DSP(UC)
	V6235700	P.C.B.	DSP(RLT)
	V6235800	P.C.B.	DSP(ABG)
CB501	V6022800	CN.FBRLINK	1P GP1FA551TZ
CB502	V6022800	CN.FBRLINK	1P GP1FA551TZ
CB503	V5478200	CN.PHOT.SN	1P GP1FA551RZ
CB504	V5478200	CN.PHOT.SN	1P GP1FA551RZ
CB505	V5478200	CN.PHOT.SN	1P GP1FA551RZ
CB506	V5478200	CN.PHOT.SN	1P GP1FA551RZ
CB507	VQ046000	CN.BS.PIN	31P
C501	US135100	C.CE.CHP	0.1uF 16V
C502	US135100	C.CE.CHP	0.1uF 16V
C503	US135100	C.CE.CHP	0.1uF 16V
C504	US135100	C.CE.CHP	0.1uF 16V
C505	US135100	C.CE.CHP	0.1uF 16V
C506	US135100	C.CE.CHP	0.1uF 16V
C507	US062470	C.CE.M.CHP	470pF 50V
C508	US135100	C.CE.CHP	0.1uF 16V
C509	UR847220	C.EL	22uF 25V
C510	US061220	C.CE.M.CHP	22pF 50V
C511	US135100	C.CE.CHP	0.1uF 16V
C512	UR847220	C.EL	22uF 25V
C513	US061220	C.CE.M.CHP	22pF 50V
C514	US135100	C.CE.CHP	0.1uF 16V(RLT)
C515	UR847220	C.EL	22uF 25V(RLT)
C517	US061100	C.CE.M.CHP	10pF 50V(RLT)
C518	US044220	C.CE.M.CHP	0.022uF 25V(RLT)
C519	US044220	C.CE.M.CHP	0.022uF 25V(RLT)
C520	US135100	C.CE.CHP	0.1uF 16V
C521	UR819100	C.EL	1000uF 6.3V
C522	US135100	C.CE.CHP	0.1uF 16V

* New Parts

P.C.B. DSP

Schm Ref.	PART NO.	Description		
C523	US061100	C.CE.M.CHP	10pF	50V
C524	US061100	C.CE.M.CHP	10pF	50V
C525	US061100	C.CE.M.CHP	10pF	50V(RLT)
C526	US044220	C.CE.M.CHP	0.022uF	25V(RLT)
C527	US061750	C.CE.CHP	75pF	50V(RLT)
C528	US135100	C.CE.CHP	0.1uF	16V
C529	US061100	C.CE.M.CHP	10pF	50V
C530	US044220	C.CE.M.CHP	0.022uF	25V
C531	US061330	C.CE.M.CHP	33pF	50V
C532	US063100	C.CE.M.CHP	1000pF	50V
C533	US062220	C.CE.CHP	220pF	50V
C534	US063100	C.CE.M.CHP	1000pF	50V
C535	US062220	C.CE.CHP	220pF	50V
C536	US063100	C.CE.M.CHP	1000pF	50V
C537	US062220	C.CE.CHP	220pF	50V(RLT)
C538	US063100	C.CE.M.CHP	1000pF	50V(RLT)
C539	US061100	C.CE.M.CHP	10pF	50V(RLT)
C540	UR837470	C.EL	47uF	16V(RLT)
C541	US135100	C.CE.CHP	0.1uF	16V(RLT)
C542	UR837470	C.EL	47uF	16V(RLT)
C543	US135100	C.CE.CHP	0.1uF	16V(RLT)
C544	US135100	C.CE.CHP	0.1uF	16V
C545	US135100	C.CE.CHP	0.1uF	16V
C546	UR819100	C.EL	1000uF	6.3V
C547	UR819100	C.EL	1000uF	6.3V
C548	US135100	C.CE.CHP	0.1uF	16V
C549	US135100	C.CE.CHP	0.1uF	16V
C550	US135100	C.CE.CHP	0.1uF	16V
C551	US135100	C.CE.CHP	0.1uF	16V
C552	US135100	C.CE.CHP	0.1uF	16V
C553	US135100	C.CE.CHP	0.1uF	16V
C554	US064100	C.CE.M.CHP	0.01uF	50V(RLT)
C555	VR169200	C.MYLAR.ML	ECQ-V1H474JL3(RLT)	
C556	US135100	C.CE.CHP	0.1uF	16V
C557	UR818470	C.EL	470uF	6.3V
C558	UR818100	C.EL	100uF	6.3V
C559	US135100	C.CE.CHP	0.1uF	16V
C560	UR819100	C.EL	1000uF	6.3V
C561	UR818100	C.EL	100uF	6.3V
C562	US135100	C.CE.CHP	0.1uF	16V
C563	US135100	C.CE.CHP	0.1uF	16V
C564	US061330	C.CE.M.CHP	33pF	50V
C565	US061330	C.CE.M.CHP	33pF	50V
C566	UR819100	C.EL	1000uF	6.3V
C567	US135100	C.CE.CHP	0.1uF	16V(RLT)
C568	US135100	C.CE.CHP	0.1uF	16V(RLT)
C569	US135100	C.CE.CHP	0.1uF	16V(RLT)
C570	US135100	C.CE.CHP	0.1uF	16V(RLT)
C571	US135100	C.CE.CHP	0.1uF	16V(RLT)
C572	UR828100	C.EL	100uF	10V(RLT)
C573	UR828100	C.EL	100uF	10V(RLT)
C574	VR169200	C.MYLAR.ML	ECQ-V1H474JL3(RLT)	
C575	US135100	C.CE.CHP	0.1uF	16V
C576	UR818470	C.EL	470uF	6.3V
C577	US061470	C.CE.M.CHP	47pF	50V
C578	US061470	C.CE.M.CHP	47pF	50V
C579	US061470	C.CE.M.CHP	47pF	50V
C580	US061470	C.CE.M.CHP	47pF	50V
C581	US061470	C.CE.M.CHP	47pF	50V
C582	US061470	C.CE.M.CHP	47pF	50V
C583	US061470	C.CE.M.CHP	47pF	50V
C584	UR818100	C.EL	100uF	6.3V
C585	US135100	C.CE.CHP	0.1uF	16V

✻ New Parts

Schm Ref.	PART NO.	Description		
C587	US135100	C.CE.CHP	0.1uF	16V
C588	US063470	C.CE.CHP	4700pF	50V
C589	UR818100	C.EL	100uF	6.3V
C590	UN837470	C.EL	47uF	16V(RLT)
C591	US135100	C.CE.CHP	0.1uF	16V(RLT)
C592	UR828100	C.EL	100uF	10V(RLT)
C593	US135100	C.CE.CHP	0.1uF	16V
C594	US135100	C.CE.CHP	0.1uF	16V(RLTABG)
C595	US135100	C.CE.CHP	0.1uF	16V
C596	US135100	C.CE.CHP	0.1uF	16V(RLTABG)
C597	US135100	C.CE.CHP	0.1uF	16V
C598	US061470	C.CE.M.CHP	47pF	50V
C599	US135100	C.CE.CHP	0.1uF	16V
C600	US135100	C.CE.CHP	0.1uF	16V
C601	US135100	C.CE.CHP	0.1uF	16V(RLT)
C602	US064100	C.CE.M.CHP	0.01uF	50V(RLT)
C603	US061180	C.CE.CHP	18pF	50V(RLT)
C604	US060200	C.CE.CHP	2pF	50V(RLT)
C605	US135100	C.CE.CHP	0.1uF	16V
C606	UR819100	C.EL	1000uF	6.3V
C607	US135100	C.CE.CHP	0.1uF	16V
C608	US135100	C.CE.CHP	0.1uF	16V
C609	US135100	C.CE.CHP	0.1uF	16V
C610	UR818100	C.EL	100uF	6.3V
C611	UR828100	C.EL	100uF	10V(RLT)
C612	US064100	C.CE.M.CHP	0.01uF	50V(RLT)
C613	US135100	C.CE.CHP	0.1uF	16V(RLT)
C614	UR828100	C.EL	100uF	10V(RLT)
C615	US135100	C.CE.CHP	0.1uF	16V
C616	UU137470	C.EL	47uF	16V
C617	US135100	C.CE.CHP	0.1uF	16V
C618	UU137470	C.EL	47uF	16V
C619	US135100	C.CE.CHP	0.1uF	16V
C620	UU118100	C.EL	100uF	6.3V
C621	UU137470	C.EL	47uF	16V
C622	US135100	C.CE.CHP	0.1uF	16V
C623	UU137470	C.EL	47uF	16V
C624	US135100	C.CE.CHP	0.1uF	16V
C625	UU137470	C.EL	47uF	16V
C626	US135100	C.CE.CHP	0.1uF	16V
C627	UU137470	C.EL	47uF	16V
C628	US135100	C.CE.CHP	0.1uF	16V
C629	UU137470	C.EL	47uF	16V
C630	US135100	C.CE.CHP	0.1uF	16V
C631	UU137470	C.EL	47uF	16V
C632	US135100	C.CE.CHP	0.1uF	16V
C633	UU147100	C.EL	10uF	25V
C634	UA952680	C.MYLAR	680pF	50V
C635	US135100	C.CE.CHP	0.1uF	16V
C636	US135100	C.CE.CHP	0.1uF	16V
C637	UU166220	C.EL	2.2uF	50V
C638	US135100	C.CE.CHP	0.1uF	16V
C639	UU118100	C.EL	100uF	6.3V
C640	UU147100	C.EL	10uF	25V
C641	UA952150	C.MYLAR	150pF	50V
C642	UA952150	C.MYLAR	150pF	50V
C643	UU147100	C.EL	10uF	25V
C644	UA952680	C.MYLAR	680pF	50V
C645	UU147100	C.EL	10uF	25V
C646	UU147100	C.EL	10uF	25V
C647	UA952680	C.MYLAR	680pF	50V
C648	UU147100	C.EL	10uF	25V
C649	UA952150	C.MYLAR	150pF	50V

✻ New Parts

P.C.B. DSP

Schm Ref.	PART NO.	Description		
C650	V3888000	C.MYLAR	150pF	50V
C651	UU147100	C.EL	10uF	25V
C652	US135100	C.CE.CHP	0.1uF	16V
C653	US135100	C.CE.CHP	0.1uF	16V
C654	UU147100	C.EL	10uF	25V
C655	V3888000	C.MYLAR	150pF	50V
C656	V3888000	C.MYLAR	150pF	50V
C657	UU147100	C.EL	10uF	25V
C658	US135100	C.CE.CHP	0.1uF	16V
C659	UU128100	C.EL	100uF	10V
C660	US061470	C.CE.M.CHP	47pF	50V
C661	US061470	C.CE.M.CHP	47pF	50V(RLTABG)
C662	US061470	C.CE.M.CHP	47pF	50V
C663	US061470	C.CE.M.CHP	47pF	50V(RLTABG)
C664	US061470	C.CE.M.CHP	47pF	50V
C665	US061470	C.CE.M.CHP	47pF	50V(RLTABG)
C666	US063470	C.CE.CHP	4700pF	50V
C673	VJ599100	C.CE.TUBLR	0.1uF	50V(UC)
C674	VJ599100	C.CE.TUBLR	0.1uF	50V(UC)
C675	UA953150	C.MYLAR	1500pF	50V
C676	UA953150	C.MYLAR	1500pF	50V
C677	UU147100	C.EL	10uF	25V
C678	US135100	C.CE.CHP	0.1uF	16V
C679	US135100	C.CE.CHP	0.1uF	16V
C680	UU147100	C.EL	10uF	25V
C681	UU147100	C.EL	10uF	25V
C682	US135100	C.CE.CHP	0.1uF	16V
C683	US135100	C.CE.CHP	0.1uF	16V
C684	UU147100	C.EL	10uF	25V
C685	UU147100	C.EL	10uF	25V
C686	US135100	C.CE.CHP	0.1uF	16V
C687	US135100	C.CE.CHP	0.1uF	16V
C688	UU147100	C.EL	10uF	25V
C695	UA952100	C.MYLAR	100pF	50V
C696	UA952100	C.MYLAR	100pF	50V
C697	UA952100	C.MYLAR	100pF	50V
C698	UA952100	C.MYLAR	100pF	50V
C699	UU147100	C.EL	10uF	25V
C700	UU147100	C.EL	10uF	25V
C701	Vi715100	C.MYLAR	470pF	50V
C702	Vi715100	C.MYLAR	470pF	50V
C703	UU147100	C.EL	10uF	25V
C704	UU147100	C.EL	10uF	25V
C705	UU147100	C.EL	10uF	25V
C706	UU147100	C.EL	10uF	25V
C707	Vi715100	C.MYLAR	470pF	50V
C708	Vi715100	C.MYLAR	470pF	50V
C709	UU147100	C.EL	10uF	25V
C710	UU147100	C.EL	10uF	25V
C711	UU147100	C.EL	10uF	25V
C712	UU147100	C.EL	10uF	25V
C713	Vi715100	C.MYLAR	470pF	50V
C714	Vi715100	C.MYLAR	470pF	50V
C715	UU147100	C.EL	10uF	25V
C716	UU147100	C.EL	10uF	25V
C717	US135100	C.CE.CHP	0.1uF	16V(RLTABG)
C718	US061470	C.CE.M.CHP	47pF	50V
C719	US061470	C.CE.M.CHP	47pF	50V(RLTABG)
C720	US061470	C.CE.M.CHP	47pF	50V
C721	US061470	C.CE.M.CHP	47pF	50V(RLTABG)
C722	US061470	C.CE.M.CHP	47pF	50V
C726	UU137220	C.EL	22uF	16V
C727	UU147100	C.EL	10uF	25V

✻ New Parts

Schm Ref.	PART NO.	Description		
C728	US135100	C.CE.CHP	0.1uF	16V
C729	UU137220	C.EL	22uF	16V
C730	UU137470	C.EL	47uF	16V
C731	US135100	C.CE.CHP	0.1uF	16V
C732	UU137470	C.EL	47uF	16V
C733	US135100	C.CE.CHP	0.1uF	16V
C734	UU137470	C.EL	47uF	16V
C735	US135100	C.CE.CHP	0.1uF	16V
C736	UU137470	C.EL	47uF	16V
C737	US135100	C.CE.CHP	0.1uF	16V
C738	US063470	C.CE.CHP	4700pF	50V
D501	VT332900	DIODE	1SS355	
D502	VT332900	DIODE	1SS355	
D503	VT332900	DIODE	1SS355	
D504	VT332900	DIODE	1SS355	
D505	VT332900	DIODE	1SS355	
D506	VT332900	DIODE	1SS355(RLT)	
D507	VT332900	DIODE	1SS355(RLT)	
D508	VT332900	DIODE	1SS355(RLT)	
D509	VT332900	DIODE	1SS355	
D510	VT332900	DIODE	1SS355	
D511	VT332900	DIODE	1SS355	
D512	VT332900	DIODE	1SS355	
D513	VT332900	DIODE	1SS355	
D514	VT332900	DIODE	1SS355	
D515	VT707700	C.TRIM	KV1851-TL(RLT)	
D516	VT332900	DIODE	1SS355	
D517	VT332900	DIODE	1SS355	
D518	VT332900	DIODE	1SS355	
D519	VT332900	DIODE	1SS355	
D520	VT332900	DIODE	1SS355	
D521	VT332900	DIODE	1SS355	
D522	VT332900	DIODE	1SS355	
D523	VT332900	DIODE	1SS355	
D524	VV220700	DIODE.SHOT	RB501V-40	
D525	VV220700	DIODE.SHOT	RB501V-40	
D526	VV220700	DIODE.SHOT	RB501V-40	
D527	VV220700	DIODE.SHOT	RB501V-40	
D528	VV220700	DIODE.SHOT	RB501V-40	
D529	VV220700	DIODE.SHOT	RB501V-40	
D530	VV220700	DIODE.SHOT	RB501V-40	
D531	VV220700	DIODE.SHOT	RB501V-40	
D532	VT332900	DIODE	1SS355	
D533	VT332900	DIODE	1SS355	
D534	VT332900	DIODE	1SS355	
D535	VT332900	DIODE	1SS355	
D536	VT332900	DIODE	1SS355	
D537	VT332900	DIODE	1SS355	
D538	VT332900	DIODE	1SS355	
D539	VD631600	DIODE	1SS133,176	
IC501	XY580A00	IC	YSS928	
IC502	XV077A00	IC	MSM514260C-60JS	
IC503	XT958A00	IC	PM4007A(RLT)	
IC504	XW433A00	IC	CY62256LL(RLT)	
IC505	XZ003A00	IC	PQ025EZ5MZP 2.5V	
IC506	XU965A00	IC	uPC29M33T-E1 3.3V	
IC507	XD655A00	IC	TC74HC00AF NAND	
IC508	XV495A00	IC	TC74VHCT08AF AND	
IC509	XR038A00	IC	NJM2904M OP AMP	
IC510	XD660A00	IC	TC74HCU04AF-TP1	
IC511	XD660A00	IC	TC74HCU04AF-TP1	
IC512	XF291A00	IC	uPC4570G2(RLT)	
IC513	XD655A00	IC	TC74HC00AF NAND	

✻ New Parts

P.C.B. DSP & P.C.B. VIDEO

Schm Ref.	PART NO.	Description	
IC514	XZ002A00	IC	AK4527VQ
IC515	XF291A00	IC	uPC4570G2
IC516	XF291A00	IC	uPC4570G2
IC517	XF291A00	IC	uPC4570G2
IC518	XF291A00	IC	uPC4570G2
IC519	XF291A00	IC	uPC4570G2
IC520	XW029A00	IC	AK4393-VF-E2
IC521	XW029A00	IC	AK4393-VF-E2
IC522	XF291A00	IC	uPC4570G2
IC523	XF291A00	IC	uPC4570G2
L501	V2726500	COIL	68uH
L502	V2726500	COIL	68uH
L503	V2726500	COIL	68uH
L504	V2726500	COIL	68uH
L506	VT623200	FLTR.LC	SBP-4930(RLT)
L507	V2726500	COIL	68uH(RLT)
PJ501	V5715300	JACK.PIN	2P(UCABG)
PJ501	V6290500	JACK.PIN	3P YKC21-4261(RLT)
Q501	iA103700	TR.CHP	2SA1037 Q,R,S(RLT)
Q502	VV556400	TR	2SC2412K Q,R,S(RLT
Q503	VV556400	TR	2SC2412K Q,R,S(RLT
Q504	VV556400	TR	2SC2412K Q,R,S(RLT
Q505	iA103700	TR.CHP	2SA1037 Q,R,S(RLT)
Q506	VV556400	TR	2SC2412K Q,R,S(RLT
Q507	VV556400	TR	2SC2412K Q,R,S(RLT
Q508	iA103700	TR.CHP	2SA1037 Q,R,S(RLT)
Q509	VV655300	TR.DGT	DTA144EKA
Q510	VV655300	TR.DGT	DTA144EKA
Q511	VV655300	TR.DGT	DTA144EKA
Q512	VV655300	TR.DGT	DTA144EKA
Q513	VV655300	TR.DGT	DTA144EKA
Q514	VD303700	TR	2SC3326 A,B
Q515	VD303700	TR	2SC3326 A,B
Q516	VV655300	TR.DGT	DTA144EKA
Q517	VV655300	TR.DGT	DTA144EKA
Q518	VV655300	TR.DGT	DTA144EKA
Q519	VD303700	TR	2SC3326 A,B
Q522	VD303700	TR	2SC3326 A,B
Q523	VD303700	TR	2SC3326 A,B
Q524	VD303700	TR	2SC3326 A,B
Q525	VD303700	TR	2SC3326 A,B
Q526	VD303700	TR	2SC3326 A,B
Q527	VD303700	TR	2SC3326 A,B
R594	HV753100	R.CAR.FP	1Ω 1/4W(RLT)
R595	HV753100	R.CAR.FP	1Ω 1/4W(RLT)
R596	HV753220	R.CAR.FP	2.2Ω 1/4W
R597	HV753220	R.CAR.FP	2.2Ω 1/4W
R598	VU224000	R.MTL.FLM	0.22Ω 1W J
R599	HV753100	R.CAR.FP	1Ω 1/4W
R600	HV753100	R.CAR.FP	1Ω 1/4W
R601	VU224000	R.MTL.FLM	0.22Ω 1W J
R609	VU224000	R.MTL.FLM	0.22Ω 1W J
R610	HV753220	R.CAR.FP	2.2Ω 1/4W
R611	HV753220	R.CAR.FP	2.2Ω 1/4W
XL501	V3625700	RSNR.CRYS	24.576MHz
XL502	VT928600	RSNR.CRYS	18.432MHz(RLT)
*	V6252600	P.C.B.	VIDEO(U)
*	V6252700	P.C.B.	VIDEO(RT)
*	V6252800	P.C.B.	VIDEO(AL)
*	V6252900	P.C.B.	VIDEO(BG)
*	V6674800	P.C.B.	VIDEO(C)

* New Parts

Schm Ref.	PART NO.	Description	
CB231	VF982200	CN.BS.PIN	14P
CB232	VQ044500	CN.BS.PIN	11P
CB601	VM929900	CN.BS.PIN	15P
CB602	VN066500	CN.BS.PIN	12P
CB603	Vi878200	CN.BS.PIN	4P
CB701	VM929900	CN.BS.PIN	15P
CB751	Vi878200	CN.BS.PIN	4P
CB851	VM859500	CN.BS.PIN	11P
* CB852	V6509500	SOCKET	9P SE 3170
C231	VK534000	C.PP	220pF 200V
C232	UU177220	C.EL	22uF 63V
C233	VQ462600	C.MYLAR	220pF 50V(RTALBG)
C233	VQ645600	C.MYLAR	100pF 50V(UC)
C234	UU147100	C.EL	10uF 25V
C235	VQ462600	C.MYLAR	220pF 50V
C236	VQ462600	C.MYLAR	220pF 50V(RTALBG)
C236	VQ645600	C.MYLAR	100pF 50V(UC)
C237	UU147100	C.EL	10uF 25V
C238	VQ462600	C.MYLAR	220pF 50V
C239	VQ462600	C.MYLAR	220pF 50V(RTALBG)
C239	VQ645600	C.MYLAR	100pF 50V(UC)
C240	UU147100	C.EL	10uF 25V
C241	UA952220	C.MYLAR	220pF 50V
C242	VQ462600	C.MYLAR	220pF 50V(RTALBG)
C242	VQ645600	C.MYLAR	100pF 50V(UC)
C243	UU147100	C.EL	10uF 25V
C244	UA952220	C.MYLAR	220pF 50V
C245	VQ462600	C.MYLAR	220pF 50V(RTALBG)
C245	VQ645600	C.MYLAR	100pF 50V(UC)
C246	UU147100	C.EL	10uF 25V
C247	VQ462600	C.MYLAR	220pF 50V
C248	UU138100	C.EL	100uF 16V
C249	UU177220	C.EL	22uF 63V
C250	UA953100	C.MYLAR	1000pF 50V
C251	VQ463300	C.PP	22pF 630V
C252	UU168100	C.EL	100uF 50V
C253	UA953100	C.MYLAR	1000pF 50V
C254	VQ463300	C.PP	22pF 630V
C255	UU168100	C.EL	100uF 50V
C256	UA953100	C.MYLAR	1000pF 50V
C257	VS696700	C.CE	33pF 500V
C258	UU157470	C.EL	47uF 35V
C259	UA953100	C.MYLAR	1000pF 50V
C260	VS696700	C.CE	33pF 500V
C261	UU157470	C.EL	47uF 35V
C262	UA953100	C.MYLAR	1000pF 50V
C263	VQ245400	C.PP	33pF 200V
C264	UU157470	C.EL	47uF 35V
C265	UR819220	C.EL	2200uF 6.3V
C266	UR819220	C.EL	2200uF 6.3V(UCRTAL)
C601	US062100	C.CE.M.CHP	100pF 50V
C602	US062100	C.CE.M.CHP	100pF 50V
C603	US062100	C.CE.M.CHP	100pF 50V
C604	US062100	C.CE.M.CHP	100pF 50V
C605	US062100	C.CE.M.CHP	100pF 50V
C606	US062100	C.CE.M.CHP	100pF 50V
C607	US135100	C.CE.CHP	0.1uF 16V
C608	US135100	C.CE.CHP	0.1uF 16V
C609	US135100	C.CE.CHP	0.1uF 16V
C610	UR829100	C.EL	1000uF 10V
C611	UR837470	C.EL	47uF 16V
C612	UR837470	C.EL	47uF 16V
C613	UR837470	C.EL	47uF 16V

* New Parts

P.C.B. VIDEO

Schm Ref.	PART NO.	Description		
C614	US135100	C.CE.CHP	0.1uF	16V
C616	US135100	C.CE.CHP	0.1uF	16V
C617	UR827470	C.EL	47uF	10V
C618	UR837470	C.EL	47uF	16V
C619	US062820	C.CE.CHP	820pF	50V(ALBG)
C619	US063150	C.CE.M.CHP	1500pF	50V(UCRT)
C620	US062270	C.CE.M.CHP	270pF	50V(ALBG)
C620	US062390	C.CE.M.CHP	390P	50V(UCRT)
C621	UR827470	C.EL	47uF	10V
C622	UR827470	C.EL	47uF	10V
C623	UR827470	C.EL	47uF	10V
C624	UR827470	C.EL	47uF	10V
C625	UR847100	C.EL	10uF	25V
C626	US135100	C.CE.CHP	0.1uF	16V
C627	US135100	C.CE.CHP	0.1uF	16V
C628	US135100	C.CE.CHP	0.1uF	16V
C629	US135100	C.CE.CHP	0.1uF	16V
C630	US060800	C.CE.CHP	8pF	50V
C631	UR827470	C.EL	47uF	10V
C632	UR827470	C.EL	47uF	10V
C633	US061330	C.CE.M.CHP	33pF	50V
C634	US064100	C.CE.M.CHP	0.01uF	50V
C635	UR827470	C.EL	47uF	10V
C636	UR866470	C.EL	4.7uF	50V
C637	UR866470	C.EL	4.7uF	50V
C638	US135100	C.CE.CHP	0.1uF	16V
C639	US063120	C.CE.M.CHP	1200pF	50V
C640	US062470	C.CE.M.CHP	470pF	50V
C641	UR866100	C.EL	1uF	50V
C642	UR866100	C.EL	1uF	50V
C643	US060700	C.CE.CHP	7pF	50V
C644	US061240	C.CE.CHP	24pF	50V
C645	US061240	C.CE.CHP	24pF	50V
C646	US062220	C.CE.CHP	220pF	50V
C647	US062120	C.CE.CHP	120pF	50V
C648	UR827470	C.EL	47uF	10V
C649	US135100	C.CE.CHP	0.1uF	16V
C650	US135100	C.CE.CHP	0.1uF	16V
C651	UR847100	C.EL	10uF	25V
C652	US135100	C.CE.CHP	0.1uF	16V
C701	US062100	C.CE.M.CHP	100pF	50V
C702	US062100	C.CE.M.CHP	100pF	50V
C703	US062100	C.CE.M.CHP	100pF	50V(UCRT)
C704	US062100	C.CE.M.CHP	100pF	50V
C705	UR847100	C.EL	10uF	25V
C706	UR829100	C.EL	1000uF	10V
C707	UR827470	C.EL	47uF	10V
C708	UR827470	C.EL	47uF	10V
C709	UR827470	C.EL	47uF	10V
C710	UR827470	C.EL	47uF	10V
C711	UR827470	C.EL	47uF	10V(UCRT)
C712	US135220	C.CE.CHP	0.22uF	16V
C713	UR827470	C.EL	47uF	10V
C714	UR838100	C.EL	100uF	16V
C715	US135100	C.CE.CHP	0.1uF	16V
C716	US135100	C.CE.CHP	0.1uF	16V
C721	UR827470	C.EL	47uF	10V
C722	US135100	C.CE.CHP	0.1uF	16V
C723	US135100	C.CE.CHP	0.1uF	16V
C751	VF466800	C.CE.TUBLR	100pF	50V
C752	VF466800	C.CE.TUBLR	100pF	50V
C753	VF466800	C.CE.TUBLR	100pF	50V
C757	US135100	C.CE.CHP	0.1uF	16V

* New Parts

Schm Ref.	PART NO.	Description		
C758	US135100	C.CE.CHP	0.1uF	16V
C759	UR847100	C.EL	10uF	25V
C760	UR847100	C.EL	10uF	25V
C851	US135100	C.CE.CHP	0.1uF	16V
C852	US135100	C.CE.CHP	0.1uF	16V
C853	US135100	C.CE.CHP	0.1uF	16V
C854	US135100	C.CE.CHP	0.1uF	16V
C855	US135100	C.CE.CHP	0.1uF	16V
C856	US135100	C.CE.CHP	0.1uF	16V
C857	UU128100	C.EL	100uF	10V
D231	VD631600	DIODE	1SS133,176	
D232	VG440300	DIODE.ZENR	MTZJ12C	12V
D233	VG440300	DIODE.ZENR	MTZJ12C	12V
D234	VG440100	DIODE.ZENR	MTZJ12A(CRTALBG)	
D234	VG442000	DIODE.ZENR	MTZJ22A	22V(U)
D235	VG439100	DIODE.ZENR	MTZJ9.1A	9.1V
D236	VD631600	DIODE	1SS133,176	
D237	VD631600	DIODE	1SS133,176	
D601	VD631600	DIODE	1SS133,176	
D602	VD631600	DIODE	1SS133,176	
D603	VD631600	DIODE	1SS133,176	
D604	VD631600	DIODE	1SS133,176	
D605	VD631600	DIODE	1SS133,176	
D606	VD631600	DIODE	1SS133,176	
D607	VD631600	DIODE	1SS133,176	
D608	VD631600	DIODE	1SS133,176	
D609	VD631600	DIODE	1SS133,176	
D610	VD631600	DIODE	1SS133,176	
D851	VT332900	DIODE	1SS355(UCRTAL)	
IC601	XW939A00	IC	TK15420M VIDEO AMP	
IC602	XL493A00	IC	TC74HC4051AP	
IC603	XL493A00	IC	TC74HC4051AP	
IC604	XL493A00	IC	TC74HC4051AP	
IC605	XL493A00	IC	TC74HC4051AP	
IC606	iR405300	IC	TC74HC4053AP(UCRTAL	
IC607	iR405300	IC	TC74HC4053AP	
IC608	iG142200	IC	TC74HCU04AP	
IC609	XY443A00	IC	LA7109 6CH	
IC610	XZ060A00	IC	LC74781-9798	
IC611	XW416A00	IC	BU2092 SER/PAR	
IC701	XW911A00	IC	LA7108M VIDEO AMP	
IC702	XL493A00	IC	TC74HC4051AP	
IC703	XL493A00	IC	TC74HC4051AP	
IC704	iR405300	IC	TC74HC4053AP(UCRTAL	
IC751	XZ177A00	IC	LA7104M VIDEO AMP	
IC752	iR405300	IC	TC74HC4053AP	
* IC851	XW863A00	IC	ADM202JRN-REEL7	
JK601	VP113600	CN.DIN	2P	
JK602	VP113600	CN.DIN	2P	
JK603	VP113600	CN.DIN	2P	
JK604	VU245200	CN.DIN	1P	
JK605	VQ960400	CN.DIN	1P	
JK851	VJ726800	JACK.MNI	(UCRTAL)	
JK852	VJ726800	JACK.MNI	(UCRTAL)	
L602	V3233700	COIL	1.5uH	
L603	V6236000	COIL	4.7uH LAV35VB4R7K	
L605	V2726100	COIL	33uH	
PJ701	V2773400	JACK.PIN	1P	
PJ702	VV325000	JACK.PIN	2P	
PJ703	VV325000	JACK.PIN	2P	
PJ704	VV325000	JACK.PIN	2P	
PJ705	V2773400	JACK.PIN	1P(BG)	
PJ705	VV325000	JACK.PIN	2P(UCRTAL)	

* New Parts

P.C.B. VIDEO & P.C.B. MAIN

Schm Ref.	PART NO.	Description		
PJ751	V6222700	JACK.PIN	RJ-1086-06-0331A	
PJ752	V6222700	JACK.PIN	RJ-1086-06-0331A	
PJ753	V6222700	JACK.PIN	RJ-1086-06-0331A	
PN231	V3750200	PIN	L=70	
PN601	V3750200	PIN	L=70	
⚠ Q231	VR510800	TR	2SD2396 J,K	
Q232	VP883100	TR	2SC1890A D,E	
Q233	VP883100	TR	2SC1890A D,E	
Q234	V3966800	TR	2SB949 O,Y	
Q235	VP883100	TR	2SC1890A D,E	
Q236	VP883100	TR	2SC1890A D,E	
Q237	V3966800	TR	2SB949 O,Y	
Q238	VP883100	TR	2SC1890A D,E	
Q239	VP883100	TR	2SC1890A D,E	
Q240	V3966800	TR	2SB949 O,Y	
Q241	VP883100	TR	2SC1890A D,E	
Q242	VP883100	TR	2SC1890A D,E	
Q243	V3966800	TR	2SB949 O,Y	
Q244	VP883100	TR	2SC1890A D,E	
Q245	VP883100	TR	2SC1890A D,E	
Q246	V3966800	TR	2SB949 O,Y	
Q247	VP883100	TR	2SC1890A D,E	
Q248	VP883100	TR	2SC1890A D,E	
Q601	iC174020	TR	2SC1740S R,S	
Q602	iC287820	TR	2SC2878 A,B	
Q603	VD678700	TR.DGT	DTC114ES	
Q604	iC174020	TR	2SC1740S R,S	
Q605	iC174020	TR	2SC1740S R,S	
Q606	iA1015I0	TR	2SA1015 Y	
Q607	iC224030	TR	2SC2240 GR,BL	
Q608	iC053540	TR	2SC535 A,B,C	
Q609	iC287820	TR	2SC2878 A,B(BG)	
Q701	iC174020	TR	2SC1740S R,S	
⚠ R250	HV754100	R.CAR.FP	10Ω	1/4W
⚠ R251	HV756470	R.CAR.FP	4.7KΩ	1/4W
R255	HV754470	R.CAR.FP	47Ω	1/4W
R262	HV754470	R.CAR.FP	47Ω	1/4W
R269	HV754470	R.CAR.FP	47Ω	1/4W
R276	HV754470	R.CAR.FP	47Ω	1/4W
R283	HV754470	R.CAR.FP	47Ω	1/4W
R653	RD357330	R.MTL.CHP	33KΩ	1/10W
XL601	VV949800	RSNR.CRYS	14.31818MHz(UCRT)	
XL601	VV949900	RSNR.CRYS	17.734475MHz(ALBG)	
*	V6239400	P.C.B.	MAIN(UC)	
*	V6239500	P.C.B.	MAIN(RT)	
*	V6239600	P.C.B.	MAIN(A)	
*	V6239700	P.C.B.	MAIN(BGL)	
CB1	VN394900	CN.BS.PIN	14P	
CB2	Vi878300	CN.BS.PIN	5P	
CB3	VQ047300	CN.BS.PIN	12P	
CB4	Vi878400	CN.BS.PIN	6P	
CB151	VK026400	CN.BS.PIN	5P	
CB152	VB858800	CN.BS.PIN	9P	
CB201	Vi878400	CN.BS.PIN	6P	
CB202	VF728300	CN	6P	
C1	UU167470	C.EL	47uF	50V
C2	UU177220	C.EL	22uF	63V
C3	VQ645600	C.MYLAR	100pF	50V
C4	UU147470	C.EL	47uF	25V
C5	VK399200	C.MYLAR.ML	0.39uF	50V

* New Parts

Schm Ref.	PART NO.	Description		
C6	UU167470	C.EL	47uF	50V
C7	VQ645600	C.MYLAR	100pF	50V
C8	VQ645600	C.MYLAR	100pF	50V
C9	UU147470	C.EL	47uF	25V
C10	VK399200	C.MYLAR.ML	0.39uF	50V
C11	UU167470	C.EL	47uF	50V
C12	VQ645600	C.MYLAR	100pF	50V
C13	VR325000	C.MYLAR	100pF	100V
C14	UU147470	C.EL	47uF	25V
C15	UU167470	C.EL	47uF	50V
C16	VR325000	C.MYLAR	100pF	100V
C17	VR325000	C.MYLAR	100pF	100V
C18	UU147470	C.EL	47uF	25V
C19	UU167470	C.EL	47uF	50V
C20	VR325000	C.MYLAR	100pF	100V
C21	VR325000	C.MYLAR	100pF	100V
C22	UU147470	C.EL	47uF	25V
C23	VR325000	C.MYLAR	100pF	100V
C24	UU196470	C.EL	4.7uF	100V
C25	UA954680	C.MYLAR	0.068uF	50V
C26	UA954680	C.MYLAR	0.068uF	50V
C27	UA954680	C.MYLAR	0.068uF	50V
C28	UA954680	C.MYLAR	0.068uF	50V
C29	UA954680	C.MYLAR	0.068uF	50V
C30	UU166470	C.EL	4.7uF	50V
C31	VT898000	C.MYLAR	0.1uF	100V
C32	VK534000	C.PP	220pF	200V
C33	UU166470	C.EL	4.7uF	50V
C34	VT898000	C.MYLAR	0.1uF	100V
C35	UU118220	C.EL	220uF	6.3V
C36	UU166470	C.EL	4.7uF	50V
C37	UU137470	C.EL	47uF	16V
C38	VF466900	C.CE.TUBLR	470pF	50V(RTABGL)
C39	VF466900	C.CE.TUBLR	470pF	50V(RTABGL)
C40	VF466900	C.CE.TUBLR	470pF	50V(RTABGL)
C41	UA954100	C.MYLAR	0.01uF	50V(RTABGL)
C42	UA954100	C.MYLAR	0.01uF	50V(RTABGL)
C43	UA954100	C.MYLAR	0.01uF	50V(RTABGL)
C44	UA954100	C.MYLAR	0.01uF	50V(RTABGL)
C45	UA954100	C.MYLAR	0.01uF	50V(RTABGL)
C46	UA954100	C.MYLAR	0.01uF	50V(RTABGL)
C47	UA954100	C.MYLAR	0.01uF	50V(RTABGL)
C48	UA954100	C.MYLAR	0.01uF	50V(RTABGL)
C49	UA954100	C.MYLAR	0.01uF	50V(RTABGL)
C151	Vi716300	C.MYLAR	4700pF	50V(RTABGL)
C152	Vi716300	C.MYLAR	4700pF	50V(RTABGL)
C153	Vi716300	C.MYLAR	4700pF	50V(RTABGL)
C154	Vi716300	C.MYLAR	4700pF	50V(RTABGL)
C155	Vi716700	C.MYLAR	0.01uF	50V(RTABGL)
C156	Vi716700	C.MYLAR	0.01uF	50V(RTABGL)
C157	UT652100	C.PP	100pF	100V
C158	UT652100	C.PP	100pF	100V
C159	UT652100	C.PP	100pF	100V
C160	UT652100	C.PP	100pF	100V
C161	UT652100	C.PP	100pF	100V
C162	UA655220	C.MYLAR	0.22uF	50V
C163	VF467300	C.CE.TUBLR	0.01uF	16V
C164	VF467300	C.CE.TUBLR	0.01uF	16V
⚠ C201	V6976000	C.EL	12000uF	63V
⚠ C202	V6976000	C.EL	12000uF	63V
C203	VK534100	C.PP	0.01uF	100V
C204	UR848470	C.EL	470uF	25V
C205	UU147100	C.EL	10uF	25V(RT)

* New Parts

P.C.B. MAIN

	Schm Ref.	PART NO.	Description	
⚠	C206	VT898000	C.MYLAR	0.1uF 100V
⚠	C207	VT898000	C.MYLAR	0.1uF 100V
	C208	UU168100	C.EL	100uF 50V
	C209	UA655100	C.MYLAR	0.1uF 50V
	C210	UA655100	C.MYLAR	0.1uF 50V
	C211	UU168100	C.EL	100uF 50V
	C212	UR897100	C.EL	10uF 100V(RT)
	C213	UU167100	C.EL	10uF 50V(RT)
	C214	Vi716700	C.MYLAR	0.01uF 50V
	D1	VN008700	DIODE	1SS270A
	D2	VD631600	DIODE	1SS133,176
	D3	VD631600	DIODE	1SS133,176
	D4	VN008700	DIODE	1SS270A
	D5	VN008700	DIODE	1SS270A
	D6	VN008700	DIODE	1SS270A
	D7	VN008700	DIODE	1SS270A
	D8	VN008700	DIODE	1SS270A
	D9	VN008700	DIODE	1SS270A
	D10	VN008700	DIODE	1SS270A
	D11	VN008700	DIODE	1SS270A
	D12	VN008700	DIODE	1SS270A
	D13	VD631600	DIODE	1SS133,176
	D14	VD631600	DIODE	1SS133,176
	D15	VG440300	DIODE.ZENR	MTZJ12C 12V
	D16	VG440300	DIODE.ZENR	MTZJ12C 12V
	D17	VG443200	DIODE.ZENR	MTZ J 30.0A 30.0V
	D18	VN008700	DIODE	1SS270A
	D19	VN008700	DIODE	1SS270A
	D20	VN008700	DIODE	1SS270A
	D21	VG440300	DIODE.ZENR	MTZJ12C 12V
	D22	VG440300	DIODE.ZENR	MTZJ12C 12V
	D23	VN008700	DIODE	1SS270A
	D24	VN008700	DIODE	1SS270A
	D25	VG437200	DIODE.ZENR	MTZJ4.7C 4.7V
	D26	VD631600	DIODE	1SS133,176
	D27	VD631600	DIODE	1SS133,176
	D28	VD631600	DIODE	1SS133,176
	D151	VG440300	DIODE.ZENR	MTZJ12C 12V
	D152	VG440300	DIODE.ZENR	MTZJ12C 12V
	D153	VG440300	DIODE.ZENR	MTZJ12C 12V
	D154	VG440300	DIODE.ZENR	MTZJ12C 12V
⚠	D201	VM702000	DIODE.BRG	S5VB20 3.5A 200V
	D202	VD631600	DIODE	1SS133,176(RT)
	D203	VG439900	DIODE.ZENR	MTZJ11B 11V(RT)
⚠	D204	VS997800	DIODE	1T2
⚠	D205	VS997800	DIODE	1T2
⚠	D206	VS997800	DIODE	1T2
⚠	D207	VS997800	DIODE	1T2
	D208	VV307700	DIODE	1N4002S(RT)
	D209	VV307700	DIODE	1N4002S
	D210	VV307700	DIODE	1N4002S
	D211	VV307700	DIODE	1N4002S
	D212	VV307700	DIODE	1N4002S
	G2	VR463400	TERM.GND	D3.5 TP00385
	G201	VR463400	TERM.GND	D3.5 TP00385
	HS201	VR506800	HEAT.SINK	PUH16-25(RT)
	L1	VU038200	COIL	0.95uH
	L2	VU038200	COIL	0.95uH
	L3	V2604200	COIL	1uH
	L4	V2604200	COIL	1uH
	L5	VU038200	COIL	0.95uH
	PJ1	VP768000	JACK.PIN	2P
	PJ2	VK437600	JACK.PIN	1P

✻ New Parts

	Schm Ref.	PART NO.	Description	
	PJ151	VJ249500	JACK.PIN	4P
*	PJ152	V6125900	JACK.PIN	WH/RED LPR6520-351
	PN1	V3750200	PIN	L=70
	PN2	V3750200	PIN	L=70
	PN3	V3750200	PIN	L=70
	PN151	V3750200	PIN	L=70
	PN152	V3750200	PIN	L=70
	PN153	V3750200	PIN	L=70
	PN202	V3750200	PIN	L=70
⚠	Q1	VK432900	TR	2SD1915F S,T
⚠	Q2	VK432900	TR	2SD1915F S,T
⚠	Q3	VK432900	TR	2SD1915F S,T
⚠	Q4	VK432900	TR	2SD1915F S,T
⚠	Q5	VK432900	TR	2SD1915F S,T
⚠	Q6	VS883300	TR	2SB1565 E,F
⚠	Q7	VP883000	TR	2SA893A D,E
	Q8	VP883000	TR	2SA893A D,E
⚠	Q9	V4096100	TR	2SC4614 S,T
⚠	Q10	V4096000	TR	2SA1770 S,T
⚠	Q11	V4096100	TR	2SC4614 S,T
⚠	Q12	V4096000	TR	2SA1770 S,T
⚠	Q13	V4096100	TR	2SC4614 S,T
⚠	Q14	V4096000	TR	2SA1770 S,T
⚠	Q15	V4096100	TR	2SC4614 S,T
⚠	Q16	V4096000	TR	2SA1770 S,T
⚠	Q17	V4096100	TR	2SC4614 S,T
⚠	Q18	V4096000	TR	2SA1770 S,T
⚠	Q19	VY760300	TR.PAIR	2SA1492/C3856 OPY
	Q20	VP883100	TR	2SC1890A D,E
⚠	Q22	VY760300	TR.PAIR	2SA1492/C3856 OPY
	Q23	VP883100	TR	2SC1890A D,E
⚠	Q25	VY760300	TR.PAIR	2SA1492/C3856 OPY
	Q26	VP883100	TR	2SC1890A D,E
⚠	Q28	VY760300	TR.PAIR	2SA1492/C3856 OPY
	Q29	VP883100	TR	2SC1890A D,E
⚠	Q31	VY760300	TR.PAIR	2SA1492/C3856 OPY
	Q32	VP883100	TR	2SC1890A D,E
	Q34	iC1815I0	TR	2SC1815 Y
	Q35	VP883000	TR	2SA893A D,E
⚠	Q36	iA1015I0	TR	2SA1015 Y
	Q37	iC1815I0	TR	2SC1815 Y
	Q151	iC1815I0	TR	2SC1815 Y
	Q154	iC1815I0	TR	2SC1815 Y
	Q201	VR510800	TR	2SD2396 J,K(RT)
	Q202	iE102620	FET	2SK246 Y(RT)
	Q203	VR510800	TR	2SD2396 J,K(RT)
	R1	V3946100	R.MTL.OXD	2.7KΩ 0.5W
	R2	V3945100	R.MTL.OXD	390Ω 0.5W
	R3	V3945500	R.MTL.OXD	820Ω 0.5W
	R4	VP941600	R.MTL.OXD	5.6KΩ 1W
	R5	VP941600	R.MTL.OXD	5.6KΩ 1W
	R6	V3946100	R.MTL.OXD	2.7KΩ 0.5W
	R7	V3945100	R.MTL.OXD	390Ω 0.5W
	R8	V3945500	R.MTL.OXD	820Ω 0.5W
	R9	VP941600	R.MTL.OXD	5.6KΩ 1W
	R10	VP941600	R.MTL.OXD	5.6KΩ 1W
	R11	V3946100	R.MTL.OXD	2.7KΩ 0.5W
	R12	V3945100	R.MTL.OXD	390Ω 0.5W
	R13	V3945500	R.MTL.OXD	820Ω 0.5W
	R14	VP941600	R.MTL.OXD	5.6KΩ 1W
	R15	VP941600	R.MTL.OXD	5.6KΩ 1W
	R16	V3946100	R.MTL.OXD	2.7KΩ 0.5W
	R17	V3945100	R.MTL.OXD	390Ω 0.5W

✻ New Parts

P.C.B. MAIN & P.C.B. POWER

	Schm Ref.	PART NO.	Description		
	R18	V3945500	R.MTL.OXD	820Ω	0.5W
	R19	VP941600	R.MTL.OXD	5.6KΩ	1W
	R20	VP941600	R.MTL.OXD	5.6KΩ	1W
	R21	V3946100	R.MTL.OXD	2.7KΩ	0.5W
	R22	V3945100	R.MTL.OXD	390Ω	0.5W
	R23	V3945500	R.MTL.OXD	820Ω	0.5W
	R24	VP941600	R.MTL.OXD	5.6KΩ	1W
	R25	VP941600	R.MTL.OXD	5.6KΩ	1W
	R26	HV755100	R.CAR.FP	100Ω	1/4W
⚠	R30	VP939700	R.MTL.FLM	4.7Ω	1W
	R31	V3945600	R.MTL.OXD	1KΩ	0.5W
⚠	R32	V3944800	R.MTL.OXD	220Ω	0.5W
⚠	R35	VP939700	R.MTL.FLM	4.7Ω	1W
	R36	HV755100	R.CAR.FP	100Ω	1/4W
⚠	R37	VP939700	R.MTL.FLM	4.7Ω	1W
	R38	V3945600	R.MTL.OXD	1KΩ	0.5W
⚠	R39	V3944800	R.MTL.OXD	220Ω	0.5W
⚠	R42	VP939700	R.MTL.FLM	4.7Ω	1W
	R43	HV755100	R.CAR.FP	100Ω	1/4W
⚠	R44	HV754100	R.CAR.FP	10Ω	1/4W
	R45	V3945600	R.MTL.OXD	1KΩ	0.5W
⚠	R46	V3944800	R.MTL.OXD	220Ω	0.5W
⚠	R47	HV754100	R.CAR.FP	10Ω	1/4W
	R48	HV755100	R.CAR.FP	100Ω	1/4W
⚠	R49	HV754100	R.CAR.FP	10Ω	1/4W
	R50	V3945600	R.MTL.OXD	1KΩ	0.5W
⚠	R51	V3944800	R.MTL.OXD	220Ω	0.5W
⚠	R52	HV754100	R.CAR.FP	10Ω	1/4W
	R53	HV755100	R.CAR.FP	100Ω	1/4W
⚠	R54	VP939800	R.MTL.OXD	10Ω	1W
	R55	V3945600	R.MTL.OXD	1KΩ	0.5W
⚠	R56	V3944800	R.MTL.OXD	220Ω	0.5W
⚠	R57	VP939800	R.MTL.OXD	10Ω	1W
⚠	R58	HV754100	R.CAR.FP	10Ω	1/4W
⚠	R62	HV756150	R.CAR.FP	1.5KΩ	1/4W
⚠	R65	V3873200	R.WW	0.22Ω	3W
⚠	R68	VP939800	R.MTL.OXD	10Ω	1W
⚠	R72	V3873200	R.WW	0.22Ω	3W
⚠	R73	VP939800	R.MTL.OXD	10Ω	1W
⚠	R77	VU981700	R.MTL.PLAT	0.22Ω+0.22	3W
⚠	R78	VP939800	R.MTL.OXD	10Ω	1W
⚠	R83	VU981700	R.MTL.PLAT	0.22Ω+0.22	3W
⚠	R84	VP939800	R.MTL.OXD	10Ω	1W
⚠	R86	V3873200	R.WW	0.22Ω	3W
⚠	R89	VP939800	R.MTL.OXD	10Ω	1W
	R95	HV754100	R.CAR.FP	10Ω	1/4W
	R98	HV754100	R.CAR.FP	10Ω	1/4W
	R101	HV754100	R.CAR.FP	10Ω	1/4W
	R103	HV754100	R.CAR.FP	10Ω	1/4W
	R106	HV754100	R.CAR.FP	10Ω	1/4W
⚠	R107	VP939700	R.MTL.FLM	4.7Ω	1W
⚠	R108	VP939700	R.MTL.FLM	4.7Ω	1W
⚠	R110	HV755100	R.CAR.FP	100Ω	1/4W
⚠	R111	HV756100	R.CAR.FP	1KΩ	1/4W
⚠	R112	VP940900	R.MTL.OXD	560Ω	1W
⚠	R113	VP940900	R.MTL.OXD	560Ω	1W
⚠	R114	VP939700	R.MTL.FLM	4.7Ω	1W
	R134	HV753470	R.CAR.FP	4.7Ω	1/4W(RTABGL)
	R135	HV753470	R.CAR.FP	4.7Ω	1/4W(RTABGL)
	R136	HV753470	R.CAR.FP	4.7Ω	1/4W(RTABGL)
⚠	R151	VP940900	R.MTL.OXD	560Ω	1W
⚠	R163	VP940900	R.MTL.OXD	560Ω	1W
⚠	R206	HV753100	R.CAR.FP	1Ω	1/4W

* New Parts

	Schm Ref.	PART NO.	Description		
⚠	R207	HV753100	R.CAR.FP	1Ω	1/4W
⚠	RY1	VK438300	RELAY	DH24D2-0T/M2	
⚠	RY2	VU566700	RELAY	DG24D2-0S/M	
⚠	RY151	VK438300	RELAY	DH24D2-0T/M2	
⚠	RY152	VK438300	RELAY	DH24D2-0T/M2	
	ST201	V4040500	SCR.TERM	M3	
	SW201	V4104200	SW.SLIDE	SL13B-022-AMCS	
	TE1	V5912000	TERM.SP	6P LTS0610(BGL)	
	TE1	V5912100	TERM.SP	6P LTS0610(UCRTA)	
	TE151	V5912200	TERM.SP	6P LTS0810(BGL)	
	TE151	V5912300	TERM.SP	6P LTS0810(UCRTA)	
		V5995800	PLATE.GND		
		EP600140	SCR.BND.HD	3x10	MFZN2-BL(RT)
*		V6234800	P.C.B.	POWER(UC)	
*		V6234900	P.C.B.	POWER(RT)	
*		V6235000	P.C.B.	POWER(A)	
*		V6235100	P.C.B.	POWER(B)	
*		V6235200	P.C.B.	POWER(G)	
*		V6235300	P.C.B.	POWER(L)	
	CB1	V5906800	CN	JET 15P TE	
	CB2	VQ963600	CN.BS.PIN	15P	
	CB301	Vi878400	CN.BS.PIN	6P	
	CB302	VP206500	HOLDER.FUS	EYF-52BCT(GL)	
	CB303	VP206500	HOLDER.FUS	EYF-52BCT(GL)	
	CB304	VG879900	CN.BS.PIN	2P	
	CB305	VP206500	HOLDER.FUS	EYF-52BCT	
	CB306	VP206500	HOLDER.FUS	EYF-52BCT	
	CB321	VP206500	HOLDER.FUS	EYF-52BCT(RT)	
	CB322	VP206500	HOLDER.FUS	EYF-52BCT(RT)	
	CB351	VQ584900	CN.BS.PIN	7P	
	CB352	VQ584900	CN.BS.PIN	7P	
	CB353	VK026800	CN.BS.PIN	9P	
	CB551	VQ961300	CN.BS.PIN	10P	
	CB552	VQ961400	CN.BS.PIN	11P	
	CB591	VQ963100	CN.BS.PIN	10P	
	CB592	VQ961300	CN.BS.PIN	10P	
	CB593	VQ963200	CN.BS.PIN	11P	
	CB594	VQ961400	CN.BS.PIN	11P	
	C1	UU137470	C.EL	47uF	16V
	C2	UU137470	C.EL	47uF	16V
	C3	VF466800	C.CE.TUBLR	100pF	50V
	C4	VF466800	C.CE.TUBLR	100pF	50V
	C5	VF467300	C.CE.TUBLR	0.01uF	16V
	C6	VF466800	C.CE.TUBLR	100pF	50V
	C7	VF467000	C.CE.TUBLR	1000pF	50V
	C8	VF466800	C.CE.TUBLR	100pF	50V
	C11	VG278600	C.CE.TUBLR	330pF	50V(BG)
	C12	VG278600	C.CE.TUBLR	330pF	50V(BG)
	C13	VG278800	C.CE.TUBLR	560pF	50V(BG)
	C14	UU137470	C.EL	47uF	16V(BG)
	C15	UU137470	C.EL	47uF	16V(BG)
	C16	VA761100	C.CE	27pF	50V(BG)
	C17	VA761100	C.CE	27pF	50V(BG)
	C18	VJ599000	C.CE.TUBLR	0.047uF	16V(BG)
	C19	UU137470	C.EL	47uF	16V(BG)
	C301	Vi716700	C.MYLAR	0.01uF	50V(RT)
	C302	VL884600	C.PP	0.01uF	100V(UCABGL)
	C303	Vi716700	C.MYLAR	0.01uF	50V(RT)
⚠	C304	V3501400	C.CE.SAFTY	0.01uF	275V
	C351	UA655100	C.MYLAR	0.1uF	50V

* New Parts

P.C.B. POWER

Schm Ref.	PART NO.	Description	
C352	UA655100	C.MYLAR	0.1uF 50V
C353	UA655100	C.MYLAR	0.1uF 50V
C354	UA655100	C.MYLAR	0.1uF 50V
C355	UU149680	C.EL	6800uF 25V
C356	UU149470	C.EL	4700uF 25V
C357	UU13A100	C.EL	10000uF 16V
C358	UU13A100	C.EL	10000uF 16V
C359	UU13A100	C.EL	10000uF 16V
C360	UU139680	C.EL	6800uF 16V
C361	UU139680	C.EL	6800uF 16V
C362	UU13A100	C.EL	10000uF 16V
C363	UU147100	C.EL	10uF 25V
C364	UU147100	C.EL	10uF 25V
C365	UU138100	C.EL	100uF 16V
C366	UU138100	C.EL	100uF 16V
C367	UU147100	C.EL	10uF 25V
C368	UU138100	C.EL	100uF 16V
C369	UU147100	C.EL	10uF 25V
C370	UU147100	C.EL	10uF 25V
C371	UU138100	C.EL	100uF 16V
C372	UU138100	C.EL	100uF 16V
C551	VJ599100	C.CE.TUBLR	0.1uF 50V
C552	VJ599100	C.CE.TUBLR	0.1uF 50V
C553	UP652470	C.POL	470pF 100V
C554	UP652470	C.POL	470pF 100V
C555	UP652470	C.POL	470pF 100V
C556	UP652470	C.POL	470pF 100V
C557	UP652470	C.POL	470pF 100V
C558	UP652470	C.POL	470pF 100V
C559	UP652470	C.POL	470pF 100V
C560	UP652470	C.POL	470pF 100V
C561	UP652470	C.POL	470pF 100V
C562	UP652470	C.POL	470pF 100V
C563	UP652470	C.POL	470pF 100V
C564	UP652470	C.POL	470pF 100V
C565	UP652470	C.POL	470pF 100V
C566	UP652470	C.POL	470pF 100V
C567	UP652470	C.POL	470pF 100V(UCRTAL)
C568	UP652470	C.POL	470pF 100V(UCRTAL)
D1	VG437700	DIODE.ZENR	MTZJ5.6B 5.6V
D301	VD631600	DIODE	1SS133,176
⚠ D351	V4269600	DIODE.BRG	D2SBA20 1.5A 200V
⚠ D352	V4269600	DIODE.BRG	D2SBA20 1.5A 200V
⚠ F301	VT942900	FUSE	TH2.5A 250V(GL)
⚠ F302	KB000790	FUSE	T4.0A 250V(ABGL)
⚠ F302	VS823300	FUSE	T8.0A 125V(UCRT)
⚠ F321	KB000790	FUSE	T4.0A 250V(RT)
G1	VR463400	TERM.GND	D3.5 TP00385
IC1	XY534A00	IC	LC72722(BG)
⚠ IC351	XJ608A00	IC	NJM7812FA
⚠ IC352	XD343A00	IC	NJM79M12FA
⚠ IC353	XJ607A00	IC	NJM7805FA 5V
⚠ IC354	XJ604A00	IC	NJM78M05FA
⚠ IC355	XE436A00	IC	NJM79M05FA
L1	Vi546100	COIL	220uH(BG)
PJ551	V4199100	JACK.PIN	6P
PJ552	VJ696300	JACK.PIN	4P
PJ553	V4199100	JACK.PIN	6P(UCRTAL)
PJ553	VJ696300	JACK.PIN	4P(BG)
PN351	V3750200	PIN	L=70
PN352	V3750200	PIN	L=70
Q1	iC1815I0	TR	2SC1815 Y
Q2	iC174020	TR	2SC1740S R,S(BG)

✻ New Parts

Schm Ref.	PART NO.	Description	
Q301	iC174020	TR	2SC1740S R,S
⚠ R355	HV753100	R.CAR.FP	1Ω 1/4W
⚠ R356	HV753100	R.CAR.FP	1Ω 1/4W
⚠ R357	VP939500	R.MTL.FLM	1Ω 1W
⚠ R358	VP939500	R.MTL.FLM	1Ω 1W
⚠ R359	VP939500	R.MTL.FLM	1Ω 1W
⚠ RY301	V6017400	RELAY	DC SDT-S-112LMR2
ST301	V4040500	SCR.TERM	M3
ST351	V4040500	SCR.TERM	M3
SW321	VA961800	VOLT.SELCT	ESE-37247-F(RT)
SW551	VY811700	SW.SLIDE	(RT)
⚠ T301	XZ228A00	TRANS.PWR	(UC)
⚠ T301	XZ229A00	TRANS.PWR	(RT)
⚠ T301	XZ230A00	TRANS.PWR	(A)
⚠ T301	XZ231A00	TRANS.PWR	(BGL)
⚠ TE301	V5867400	OUTLET.AC	2P(RT)
⚠ TE301	VT915000	OUTLET.AC	2P(A)
⚠ TE301	VU543100	OUTLET.AC	2P(UC)
⚠ TE301	VU543300	OUTLET.AC	1P(B)
⚠ TE301	VU543400	OUTLET.AC	2P(GL)
XL1	V3930900	RSNR.CRYS	4.332MHz(BG)

✻ New Parts

Chip Resistors

Schm Ref.	PART NO.	Description		
	RD350000	R.CAR.CHP	0Ω	1/10W
	RD353100	R.CAR.CHP	1Ω	1/10W
	RD353220	R.CAR.CHP	2.2Ω	1/10W
	RD354330	R.CAR.CHP	33Ω	1/10W
	RD354470	R.CAR.CHP	47Ω	1/16W
	RD354680	R.CAR.CHP	68Ω	1/16W
	RD354750	R.CAR.CHP	75Ω	1/10W
	RD354820	R.CAR.CHP	82Ω	1/10W
	RD355100	R.CAR.CHP	100Ω	1/10W
	RD355120	R.CAR.CHP	120Ω	1/10W
	RD355150	R.CAR.CHP	150Ω	1/10W
	RD355220	R.CAR.CHP	220Ω	1/10W
	RD355330	R.CAR.CHP	330Ω	1/10W
	RD355470	R.CAR.CHP	470Ω	1/10W
	RD355510	R.CAR.CHP	510Ω	1/16W
	RD355560	R.CAR.CHP	560Ω	1/16W
	RD355680	R.CAR.CHP	680Ω	1/10W
	RD355820	R.CAR.CHP	820Ω	1/10W
	RD355910	R.CAR.CHP	910Ω	1/16W
	RD356100	R.CAR.CHP	1KΩ	1/10W
	RD356120	R.CAR.CHP	1.2KΩ	1/10W
	RD356150	R.CAR.CHP	1.5KΩ	1/10W
	RD356180	R.CAR.CHP	1.8KΩ	1/10W
	RD356200	R.CAR.CHP	2KΩ	1/10W
	RD356220	R.CAR.CHP	2.2KΩ	1/10W
	RD356270	R.CAR.CHP	2.7KΩ	1/10W
	RD356330	R.CAR.CHP	3.3KΩ	1/10W
	RD356430	R.CAR.CHP	4.3KΩ	1/10W
	RD356470	R.CAR.CHP	4.7KΩ	1/10W
	RD356510	R.CAR.CHP	5.1KΩ	1/10W
	RD356560	R.CAR.CHP	5.6KΩ	1/10W
	RD356680	R.CAR.CHP	6.8KΩ	1/10W
	RD356750	R.CAR.CHP	7.5KΩ	1/10W
	RD356820	R.CAR.CHP	8.2KΩ	1/10W
	RD356910	R.CAR.CHP	9.1Ω	1/10W
	RD357100	R.CAR.CHP	10KΩ	1/10W
	RD357150	R.CAR.CHP	15KΩ	1/10W
	RD357180	R.CAR.CHP	18KΩ	1/10W
	RD357220	R.CAR.CHP	22KΩ	1/10W
	RD357270	R.CAR.CHP	27KΩ	1/10W
	RD357470	R.CAR.CHP	47KΩ	1/10W
	RD357560	R.CAR.CHP	56KΩ	1/10W
	RD357680	R.CAR.CHP	68KΩ	1/10W
	RD357820	R.CAR.CHP	82KΩ	1/10W
	RD358100	R.CAR.CHP	100KΩ	1/10W
	RD358120	R.CAR.CHP	120KΩ	1/10W
	RD358220	R.CAR.CHP	220KΩ	1/10W
	RD358330	R.CAR.CHP	330KΩ	1/16W
	RD358470	R.CAR.CHP	470KΩ	1/10W
	RD358680	R.CAR.CHP	680KΩ	1/10W
	RD359100	R.CAR.CHP	1MΩ	1/10W
	RD359220	R.CAR.CHP	2.2MΩ	1/10W

⁎ New Parts

Schm Ref.	PART NO.	Description	

⁎ New Parts

■ EXPLODED VIEW

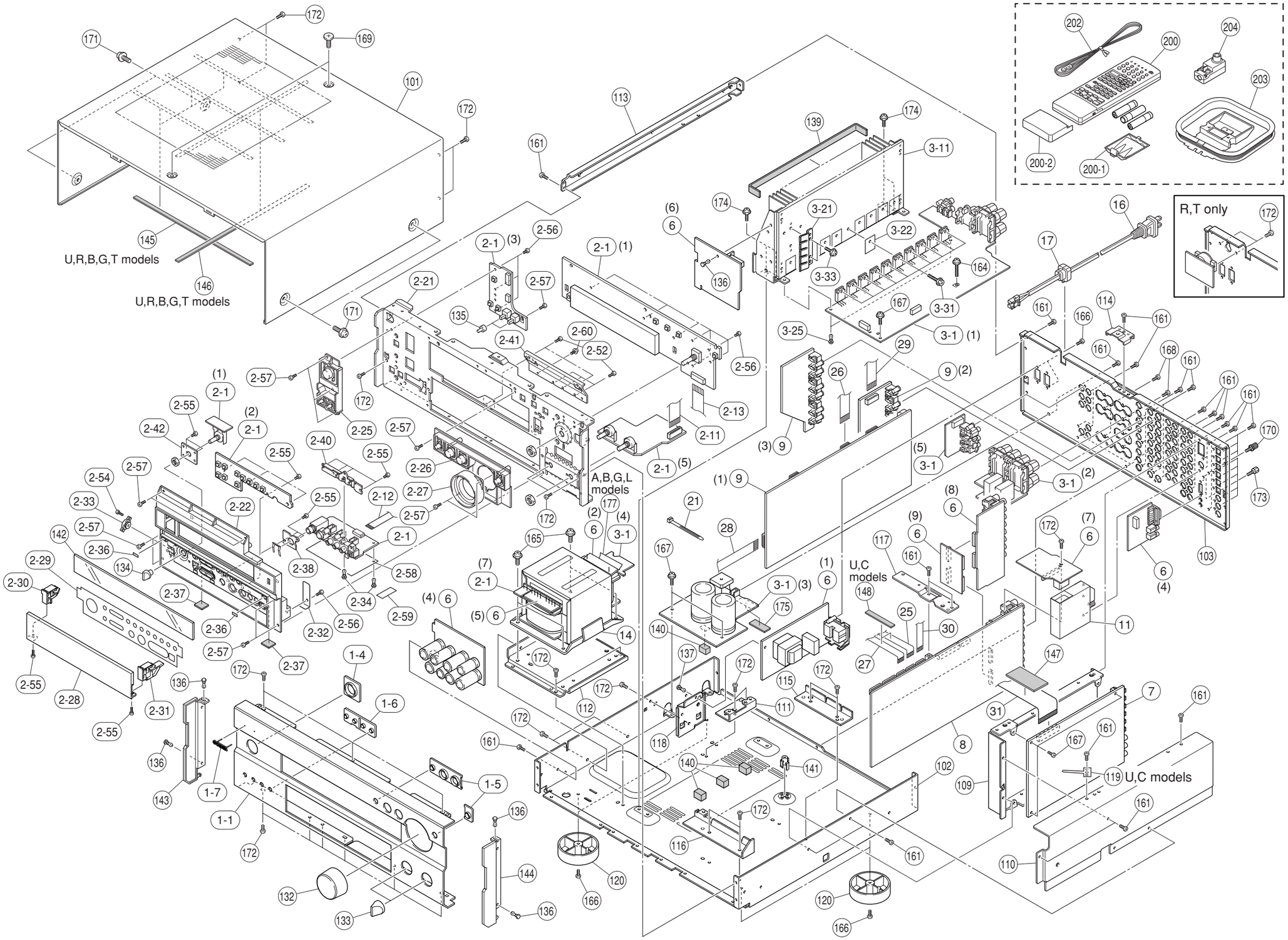

■ MECHANICAL PARTS

	Ref. No.	PART NO.	Description		Remarks	Markets
*	1-1	V5999400	FRONT PANEL		RX-V1000RDSGD	
*	1-1	V5999200	FRONT PANEL		RX-V1000GD	
*	1-1	V5999100	FRONT PANEL		RX-V1000BL	
*	1-1	V5999300	FRONT PANEL		RX-V1000RDSBL	
	1-4	V6003800	ESCUTCHOEN/POWER		BL	
	1-4	V6003900	ESCUTCHOEN/POWER		GD	
	1-5	V6004200	ESCUTCHOEN/INPUT		GD	
	1-5	V6004100	ESCUTCHOEN/INPUT		BL	
	1-6	V6004400	ESCUTCHOEN/D5			
	1-7	V6034200	EMBLEM		GD	
	1-7	V6034100	EMBLEM		BL	
*	2-1	V6292400	P.C.B. ASS Y	OPERATION		(UCRALT)
*	2-1	V6292500	P.C.B. ASS Y	OPERATION		(BG)
	2-11	MF117160	FLEXIBLE FLAT CABLE	17P 160mm		
	2-12	MF211250	S FLEXIBLE FLAT CABLE	11P 250mm P=1.25		
	2-13	MF219180	S FLEXIBLE FLAT CABLE	19P 180mm P=1.25		
	2-21	V5994400	SUB CHASSIS			
	2-22	V6000000	SUB PANEL/CASE		RX-V1000BL	
	2-22	V6019600	SUB PANEL/CASE		RX-V1000RDSBL	
	2-22	V6019700	SUB PANEL/CASE		RX-V1000RDSGD	
	2-22	V6000100	SUB PANEL/CASE		RX-V1000GD	
	2-25	V6000600	BUTTON/P		BL	
	2-25	V6000700	BUTTON/P		GD	
	2-26	V6000400	BUTTON/INPUT		GD	
	2-26	V6000300	BUTTON/INPUT		BL	
	2-27	V6004600	ESCUTCHEON/VOL		GD	
	2-27	V6004500	ESCUTCHEON/VOL		BL	
*	2-28	V6019300	PANEL/LID AN		BL	
*	2-28	V6019400	PANEL/LID AN		GD	
*	2-29	V6006200	PLATE/SP		RX-V1000BL	
*	2-29	V6006400	PLATE/SP		RX-V1000RDSBL	
*	2-29	V6006500	PLATE/SP		RX-V1000RDSGD	
*	2-29	V6006300	PLATE/SP		RX-V1000GD	
	2-30	V6005100	HINGE, L		GD	
	2-30	V6005000	HINGE, L		BL	
	2-31	V6005300	HINGE, R		BL	
	2-31	V6005400	HINGE, R		GD	
	2-32	V4593300	SPRING/LID			
	2-33	VZ830300	DAMPER/GEAR	15G		
	2-34	VQ368600	PUSH RIVET	P3555-B		
	2-36	VY940400	CUSHION, LID	T=0.8		
	2-37	VV982000	DAMPER	1x12x12		
	2-38	V5997900	SUPPORT/HP			
	2-40	V5998100	STOPPER/PCB			
	2-41	V5998200	EARTH COVER			
*	2-42	V5998000	SUPPORT/REC			
	2-52	VN413300	BIND HEAD BONDING B-T. SCREW	3x8 MFZN2-BL		
	2-54	VG893800	BIND HEAD P-TITE SCREW	2x6 ZMC2-BL		
	2-55	VG863900	BIND HEAD TAPPING SCREW	2.6x6 ZMC2-BL		
	2-56	EP630290	BIND HEAD P-TITE SCREW	3x6 FCRM3-BL		
	2-57	EP600830	BIND HEAD B-TITE SCREW	3x8 FCRM3-BL		
	2-58	V6722700	SHEET/SHIELD			
	2-59	V6774400	TAPE/GND			

* New Parts

	Ref. No.	PART NO.	Description		Remarks	Markets
	2-60	VJ204800	PW HEAD S-TITE SCREW	3x6-8 FCRM3-BL		
*	3-1	V6239400	P.C.B. ASS Y	MAIN		(UC)
*	3-1	V6239500	P.C.B. ASS Y	MAIN		(RT)
*	3-1	V6239600	P.C.B. ASS Y	MAIN		(A)
*	3-1	V6239700	P.C.B. ASS Y	MAIN		(BGL)
	3-11	V5994800	HEAT SINK			
	3-21	V2461000	SUPPORT, TR			
	3-22	VV849300	SHEET	19x24		
	3-25	VQ368600	PUSH RIVET	P3555-B		
	3-31	VK173200	SCREW, TRANSISTOR	3x15 SP FCM3		
	3-33	VT669300	PW HEAD B-TITE SCREW	3x8-8 MFC2		
*	6	V6234800	P.C.B. ASS Y	POWER		(C)
*	6	V6234900	P.C.B. ASS Y	POWER		(RT)
*	6	V6235000	P.C.B. ASS Y	POWER		(A)
*	6	V6235100	P.C.B. ASS Y	POWER		(B)
*	6	V6235200	P.C.B. ASS Y	POWER		(G)
*	6	V6235300	P.C.B. ASS Y	POWER		(L)
*	7	V6235700	P.C.B. ASS Y	DSP		(RLT)
*	7	V6235800	P.C.B. ASS Y	DSP		(UCABG)
*	8	V6242000	P.C.B. ASS Y	FUNCTION		(UC)
*	8	V6242100	P.C.B. ASS Y	FUNCTION		(RT)
*	8	V6242200	P.C.B. ASS Y	FUNCTION		(AL)
*	8	V6242300	P.C.B. ASS Y	FUNCTION		(BG)
*	9	V6252600	P.C.B. ASS Y	VIDEO		(U)
*	9	V6252700	P.C.B. ASS Y	VIDEO		(RT)
*	9	V6252800	P.C.B. ASS Y	VIDEO		(AL)
*	9	V6252900	P.C.B. ASS Y	VIDEO		(BG)
*	9	V6674800	P.C.B. ASS Y	VIDEO		(C)
	11	V6166300	AM/FM TUNER	TFCE1U213A U		(UCRT)
	11	V6166400	AM/FM TUNER	TFCE1E213A G		(ABGL)
⚠	14	XZ277A00	POWER TRANSFORMER			(U)
⚠	14	XZ278A00	POWER TRANSFORMER			(C)
⚠	14	XZ279A00	POWER TRANSFORMER			(RT)
⚠	14	XZ280A00	POWER TRANSFORMER			(A)
⚠	14	XZ281A00	POWER TRANSFORMER			(BGL)
⚠	16	V2296800	POWER CORD ASS Y			(A)
⚠	16	V2363800	POWER CORD ASS Y			(UC)
⚠	16	VN363700	POWER CORD ASS Y			(GL)
⚠	16	VV437300	POWER CORD ASS Y			(B)
⚠	16	VZ542500	POWER CORD ASS Y			(RT)
	17	V2438700	CORD STOPPER	10P1		
	21	VU590000	BINDING TIE	CBTD001B		(RT)
	25	MF111160	FLEXIBLE FLAT CABLE	11P 160mm		
	26	MF112100	FLEXIBLE FLAT CABLE	12P 100mm P=1.25		
	27	MF112200	FLEXIBLE FLAT CABLE	12P 200mm		
	28	MF114100	FLEXIBLE FLAT CABLE	14P 100mm		
	29	MF115070	FLEXIBLE FLAT CABLE	15P 70mm P=1.25		
	30	MF211300	S FLEXIBLE FLAT CABLE	11P 300mm		
	31	MF231100	S FLEXIBLE FLAT CABLE	31P 100mm P=1.25		
	101	V5994000	TOP COVER		BL	
	101	V5994100	TOP COVER		GD	
	102	V5994300	CHASSIS			
*	103	V5997100	REAR PANEL			(U)

* New Parts

	Ref. No.	PART NO.	Description		Remarks	Markets
*	103	V5997200	REAR PANEL			(C)
*	103	V5997300	REAR PANEL			(RT)
*	103	V5997400	REAR PANEL			(A)
*	103	V5997500	REAR PANEL			(L)
*	103	V5997700	REAR PANEL			(B)
*	103	V5997800	REAR PANEL			(G)
	109	V5994600	SHIELD CASE			
	110	V5994700	SHIELD CASE COVER			
	111	V2460900	FRAME			
	112	V5994500	FRAME/TRANSFORMER			
	113	V5995100	FRAME/L			
	114	V5995200	SUPPORT/TOP			
	115	V5995300	SUPPORT/PCB-R			
	116	V5995400	SUPPORT/PCB-FRONT			
	117	V5995600	SUPPORT/PCB-TOP			
	118	V6940700	SUPPORT/ST			
	119	VQ775900	GROUND PLATE			(UC)
	120	V0042500	LEG	D60xH21	GD	
	120	VS025000	LEG	D60xH21	BL,TI	
	132	V6068000	KNOB/D43		BL	
	132	V6068100	KNOB/D43		GD	
	133	V6001300	KNOB D20		BL	
	133	V6001400	KNOB D20		GD	
	134	V6001600	KNOB D15		BL	
	134	V6001700	KNOB D15		GD	
	135	V6001900	BUTTON D5		BL	
	135	V6002000	BUTTON D5		GD	
	136	VQ368600	PUSH RIVET	P3555-B		
	137	VQ368500	PUSH RIVET			
	139	V5454200	DAMPER	2/10/260		
	140	V2879500	SPACER PCB-M			
	141	VR264400	SPACER	H8		
	142	V6006700	SHEET, WINDOW			
	143	V6002500	PLATE/SIDE L		BL	
	143	V6002700	PLATE/SIDE L		GD	
	144	V6002900	PLATE/SIDE R		BL	
	144	V6003000	PLATE/SIDE R		GD	
*	145	V6742100	DAMPER	2/7.5/230RX-V800ML		(URBGT)
*	146	V6742200	DAMPER	2/4/264 RX-V800ML		(URBGT)
*	147	V6742300	DAMPER	3/30/60 RX-V800ML		
*	148	V6742400	DAMPER	3/10/50 RX-V800ML		(UC)
	161	VN413300	BIND HEAD BONDING B-T. SCREW	3x8 MFZN2-BL		
	164	VT669400	PW HEAD B-TITE SCREW	3x15-8 MFC2		
	165	21991500	PW HEAD S-TITE SCREW	4x8-10 FCRM3-BL		
	166	EP600250	BIND HEAD B-TITE SCREW	3x8 ZMC2-Y		
	167	VT669300	PW HEAD B-TITE SCREW	3x8-8 MFC2		
	168	VY731200	BONDING HEAD TAPPING SCREW	3x10 MFNI33		
	169	VK522000	SPECIAL SCREW S-TITE	4x8-10 FCRM3-BL	BL	
	169	VZ893000	DECORATED SCREW S-TIGHT	4x8-10 MFNI-33	GD	
	170	AA627310	GROUND TERMINAL			
	171	21991500	PW HEAD S-TITE SCREW	4x8-10 FCRM3-BL	BL	
	171	VD069600	PW HEAD S-TITE SCREW	4x8-10 MFNI-33	GD	
	172	EP630210	BIND HEAD S-TITE SCREW	3x6 ZMC2-BL		

* New Parts

	Ref. No.	PART NO.	Description		Remarks	Markets
*	173	V6509600	JACK SCREW	SS6-A47511848		
	174	VJ204800	PW HEAD S-TITE SCREW	3x6-8 FCRM3-BL		
	175	V6957300	SPACER	9x35x11.6		
	177	V7055200	SHEET/BARRIER			(ABGL)
			ACCESSORIES			
*	200	V6283500	REMOTE CONTROL TRANSMITTER	RAV222		
*	200-1	AAX20900	BATTERY COVER	103RRC-170-02R		
*	200-2	AAX20890	SLIDE COVER	103RRC-171-02R		
	202	V6267000	ANTENNA, FM	1.4m		(RTC)
	202	VQ147100	ANTENNA, FM	1.4m		(GL)
	203	VR248500	ANTENNA, AM LOOP	1.0m		
	204	VE364900	ANTENNA ADAPTER	PAL 75-300Ω		(B)
			BATTERY (MANGANESE DRY)	R6PPTT/3ST(R6P)		

* New Parts

Parts List for Carbon Resistors

Value	**1/4W** Type Part No.	**1/6W** Type Part No.	Value	**1/4W** Type Part No.	**1/6W** Type Part No.
1.0	HJ35 3100	HF85 3100	10 k	HF45 7100	HF45 7100
1.8	HJ35 3180	❊	11 k	HF45 7110	HF45 7110
2.2	HJ35 3220	HF85 3220	12 k	HJ35 7120	HF85 7120
3.3	HJ35 3330	HF85 3330	13 k	HF45 7130	HF45 7130
4.7	HJ35 3470	HF85 3470	15 k	HF45 7150	HF45 7150
5.6	HJ35 3560	HF85 3560	18 k	HF45 7180	HF45 7180
10	HF45 4100	HF45 4100	22 k	HF45 7220	HF45 7220
15	HJ35 4150	HF85 4150	24 k	HF45 7240	HF45 7240
22	HF45 4220	HF45 4220	27 k	HJ35 7270	HF85 7270
27	HJ35 4270	HF85 4270	30 k	HF45 7300	HF45 7300
33	HF45 4330	HF45 4330	33 k	HF45 7330	HF45 7330
39	HJ35 4470	HF85 4390	36 k	HF45 7360	HF45 7360
47	HF45 4470	HF45 4470	39 k	HF45 7390	HF45 7390
56	HF45 4560	HF45 4560	47 k	HF45 7470	HF45 7470
68	HF45 4680	HF45 4680	51 k	HF45 7510	HF45 7510
75	HF45 4750	HF45 4750	56 k	HF45 7560	HF45 7560
82	HF45 4820	HF45 4820	62 k	HF45 7620	HF45 7620
91	HF45 4910	HF45 4910	68 k	HF45 7680	HF45 7680
100	HF45 5100	HF45 5100	82 k	HF45 7820	HF45 7820
110	HJ35 5110	HF85 5110	91 k	HF45 7910	HF45 7910
120	HF45 5120	HF45 5120	100 k	HF45 8100	HF45 8100
150	HF45 5150	HF45 5150	110 k	HF45 8110	HF45 8110
160	HJ35 5160	❊	120 k	HF45 8120	HF45 8120
180	HF45 5180	HF45 5180	150 k	HF45 8150	HF45 8150
200	HF45 5200	HF45 5200	180 k	HF45 8180	HF45 8180
220	HF45 5220	HF45 5220	220 k	HJ35 8220	HF85 8220
270	HF45 5270	HF45 5270	270 k	HF45 8270	HF45 8270
330	HF45 5330	HF45 5330	300 k	HF45 8300	HF45 8300
390	HF45 5390	HF45 5390	330 k	HF45 8330	HF45 8330
430	HF45 5430	HF45 5430	390 k	HJ35 8390	HF85 8390
470	HF45 5470	HF45 5470	470 k	HF45 8470	HF45 8470
510	HF45 5510	HF45 5510	560 k	HJ35 8560	HF85 8560
560	HF45 5560	HF45 5560	680 k	HJ35 8680	HF85 8680
680	HF45 5680	HF45 5680	820 k	HJ35 8820	HF85 8820
820	HF45 5820	HF45 5820	1.0 M	HF45 9100	HF45 9100
910	HF45 5910	HF45 5910	1.2 M	HJ35 9120	❊
1.0 k	HF45 6100	HF45 6100	1.5 M	HJ35 9150	HF85 9150
1.2 k	HF45 6120	HF45 6120	1.8 M	HJ35 9180	HF85 9180
1.5 k	HF45 6150	HF45 6150	2.2 M	HJ35 9220	HF85 9220
1.8 k	HF45 6180	HF45 6180	3.3 M	HJ35 9330	HF85 9330
2.0 k	HJ35 6200	HF85 6200	3.9 M	HJ35 9390	❊
2.2 k	HF45 6220	HF45 6220	4.7 M	HJ35 9470	HF85 9470
2.4 k	HJ35 6240	HF85 6240			
2.7 k	HF45 6270	HF45 6270			
3.0 k	HF45 6300	HF45 6300			
3.3 k	HF45 6330	HF45 6330			
3.6 k	HJ35 6360	HF85 6360			
3.9 k	HF45 6390	HF45 6390			
4.7 k	HF45 6470	HF45 6470			
5.1 k	HF45 6510	HF45 6510			
5.6 k	HF45 6560	HF45 6560			
6.8 k	HF45 6680	HF45 6680			
8.2 k	HF45 6820	HF45 6820			
9.1 k	HF45 6910	HF45 6910			

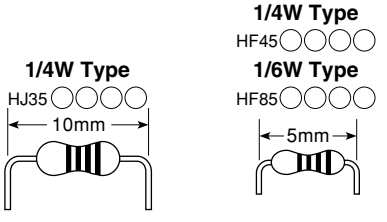

❊ : Not available

1

■ REMOTE CONTROL TRANSMITTER

● SCHEMATIC DIAGRAM

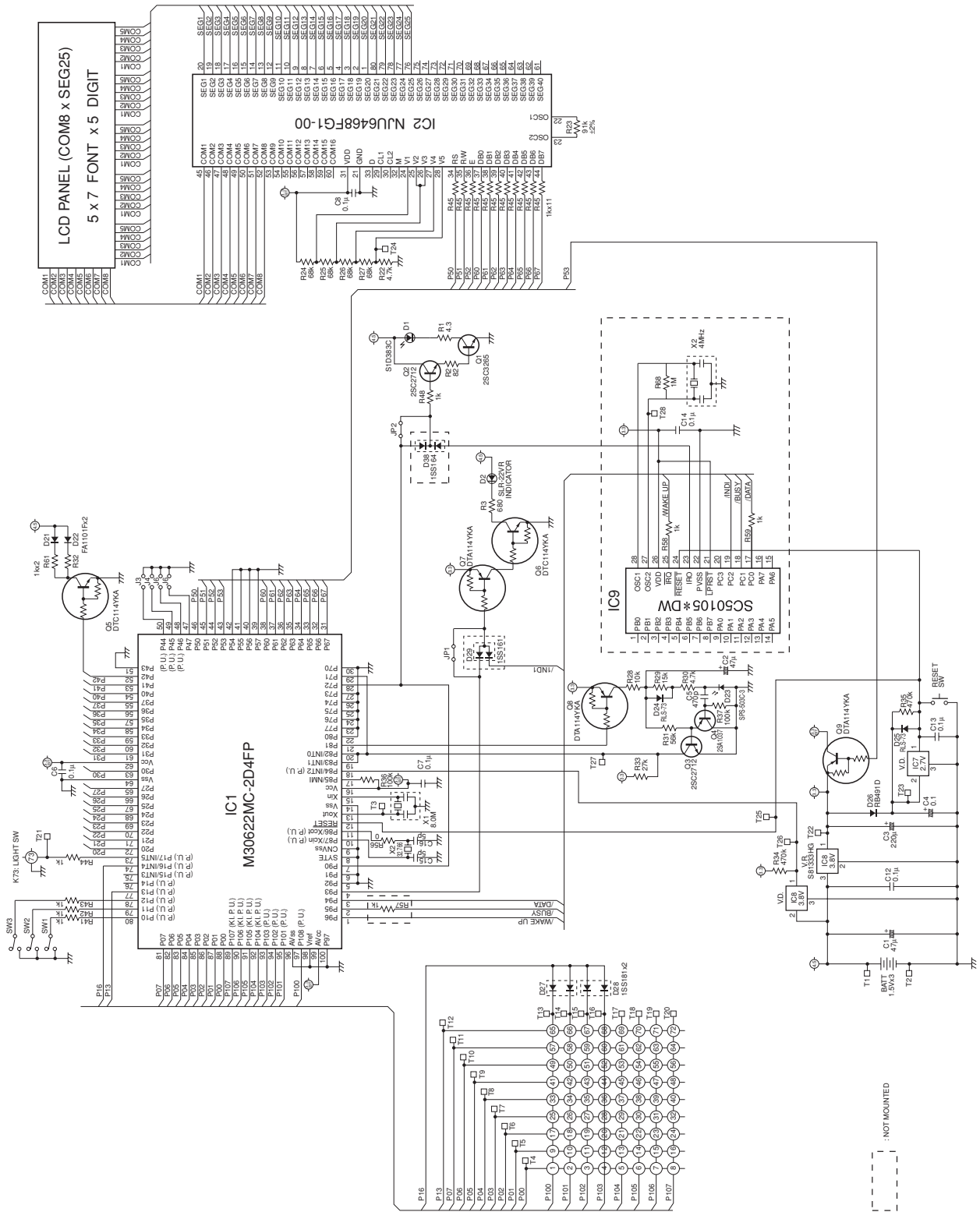

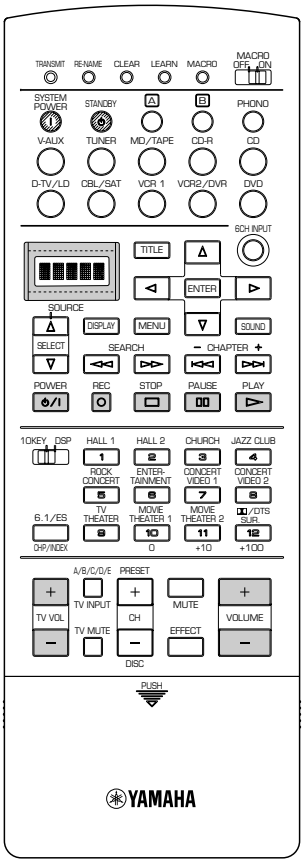

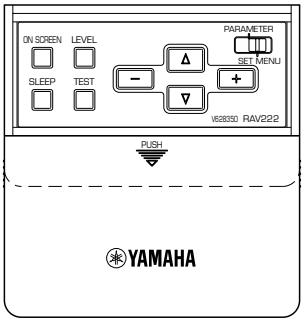

Initial Code

Key No.	Key Name	YPC	DSP *1	Zone *2
1	—	—	—	—
2	RE-NAME	—	—	—
3	CLEAR	—	—	—
4	LEARN	—	—	—
5	MACRO	—	—	—
6	SYSTEM POWER	*7A-1D	7D-90	*7A-1D
7	STANDBY	7A-1E	7D-91	7A-1E
8	A	—	—	—
9	B	—	—	—
10	PHONO	7A-14	7D-88	7A-D0
11	V-AUX	7A-55	7D-8A	7A-D8
12	TUNER	7A-16	7D-89	7A-D2
13	MD/TAPE	7A-18	7D-8B	7A-D3
14	CD-R	7A-19	7D-8C	7A-D4
15	CD	7A-15	7D-87	7A-D1
16	D-TV/LD	7A-54	7D-84	7A-D9
17	CBL/SAT	7A-C0	7D-96	7A-CC
18	VCR1	7A-0F	7D-81	7A-D6
19	VCR2/DVR	7A-13	7D-82	7A-D7
20	DVD	7A-C1	7D-97	7A-CD
21	6CH INPUT	7A-87	7D-8C	7A-87

*1; These code are transmitted when "DSP" is set-up as AMP library.
*2; "ZONE2" is set-up as AMP library and these code are transmitted when "ZONE2" is chosen with Select key.
*; Transmitting Code of K6, "7A-1D"
Full word transmitted twice.

Device not mentioned on this table has no initial code.

*1; AMPライブラリーをDSPに設定することで送信されます。
*2; AMPライブラリーをZONE2に設定し、Selectキーによりzone2を選択することで送信されます。
*; K6送信コード"7A-1D"について
ワード部が2回送信されます。

本表に記載なきデバイスの初期コードはありません。

	Device				DVD (K20)	CD-R (K14)	CD (K15)	MD/TAPE (K13)	TUNER (K12)	A (K8)
22	Up	→	→	→	7C-B4	—	—	—	—	—
23	TITLE	→	→	→	7C-B1	—	—	—	—	—
24	Left	→	→	→	7C-B5	—	—	—	—	—
25	ENTER	→	→	→	7C-B8	—	—	—	—	—
26	Right	→	→	→	7C-B6	—	—	—	—	—
27	SOUND	→	→	→	7C-AD	—	—	—	—	7C-12
28	Down	→	→	→	7C-B3	—	—	—	—	—
29	MENU	→	→	→	7C-B2	—	—	—	—	—
30	DISPLAY	→	→	→	7C-A6	7F-9E	79-0A	79-A5	—	7C-13
31	SEARCH <<	→	→	→	7C-86	7F-88	7A-0D	79-AC	—	7C-06
32	SEARCH >>	→	→	→	7C-87	7F-89	7A-0C	79-AD	—	7C-07
33	CHAPTER –	→	→	→	7C-89	7F-86	7A-0B	79-AB	—	7C-02
34	CHAPTER +	→	→	→	7C-BA	7F-87	7A-0A	79-AE	—	7C-03
35	PLAY	→	→	→	7C-82	7F-82	7A-08	79-A8	—	7C-05
36	PAUSE	→	→	→	7C-83	7F-83	7A-09	79-A9	—	7C-5A
37	STOP	→	→	→	7C-85	7F-84	7A-09	79-AA	—	7C-5B
38	REC	→	→	→	7C-B7	—	—	79-AF	—	—
39	POWER	→	→	→	—	—	—	—	—	—
40	SELECT Down	—	—	—	—	—	—	—	—	—
41	SELECT Up	—	—	—	—	—	—	—	—	—
	SW (10KEY/DSP)		DSP				10 key			
42	1	7A-88	7D-D0	7A-88	7C-94	7F-91	79-11	79-85	7A-E5	7C-17
43	2	7A-89	7D-D1	7A-89	7C-95	7F-92	79-12	79-86	7A-E6	7C-18
44	3	7A-8A	7D-D2	7A-8A	7C-96	7F-93	79-13	79-87	7A-E7	7C-19
45	4	7A-8B	7D-D3	7A-8B	7C-97	7F-94	79-14	79-88	7A-E8	7C-1A
46	5	7A-8C	7D-D4	7A-8C	7C-98	7F-95	79-15	79-89	7A-E9	7C-1B
47	6	7A-8D	7D-D5	7A-8D	7C-99	7F-96	79-16	79-8A	7A-EA	7C-1C
48	7	7A-8E	7D-D6	7A-8E	7C-9A	7F-97	79-17	79-8B	7A-EB	7C-1D
49	8	7A-8F	7D-D7	7A-8F	7C-9B	7F-98	79-18	79-8C	7A-EC	7C-1E
50	9	7A-90	7D-D8	7A-90	7C-9C	7F-99	79-19	79-8D	7A-E1	7C-1F
51	10	7A-91	7D-D9	7A-91	7C-93	7F-90	79-10	79-8E	7A-E2	7C-16
52	11	7A-92	7D-DA	7A-92	7C-9D	7F-9A	79-1A	79-8F	7A-E3	7C-5D
53	12	7A-93	7D-DB	7A-93	7C-9F	7F-8C	79-0D	—	7A-E4	7C-5E
54	6.1/ES	7A-97	7D-DF	7A-97	7C-9E	7F-8A	79-0B	—	7A-E0	7C-15
55	TV VOL +	→	→	→	—	—	—	—	—	—
56	TV VOL –	→	→	→	—	—	—	—	—	—
57	TV INPUT	→	→	→	—	—	—	—	7A-12	—
58	TV MUTE	→	→	→	—	—	—	—	—	—
59	CH +	→	→	→	7C-8B	—	7A-4F	—	7A-10	—
60	CH –	→	→	→	7C-8A	—	7A-50	—	7A-11	—
61	MUTE	7A-1C	7D-94	7A-DC						
62	EFFECT	7A-56	7D-C1	7A-56						
63	VOLUME +	7A-1A	7D-8D	7A-DA						
64	VOLUME –	7A-1B	7D-8E	7A-DB						

	SW (PARAMETER/SET MENU)	Parameter	Set Menu	Parameter	Set Menu	Parameter	Set Menu
65	ON SCREEN	7A-C2		7D-C2		7A-C2	
66	SLLEP	7A-57		7D-93		7A-57	
67	LEVEL	7A-86		7D-95		7A-86	
68	TEST	7A-85		7D-CA		7A-85	
69	–	7A-C7	7A-9F	7D-C7	7D-9F	7A-C7	7A-9F
70	Up	7A-C5	7A-9D	7D-C5	7D-9D	7A-C5	7A-9D
71	Down	7A-C4	7A-9C	7D-C4	7D-9C	7A-C4	7A-9C
72	+	7A-C6	7A-9E	7D-C6	7D-9E	7A-C6	7A-9E

Initial Macro setup

Key No.	Key Name	1	2	3		4~10
6	SYSTEM POWER	K6	K39 TV	—		—
7	STANDBY	K7	—	—		—
8	A	K6	—	—		—
9	B	K6	—	—		—
10	PHONO	K6	K10	—		—
11	V-AUX	K6	K11	—		—
12	TUNER	K6	K12	—		—
13	MD/TAPE	K6	K13	K35	MD	—
14	CD-R	K6	K14	K35	CD-R	—
15	CD	K6	K15	K35	CD	—
16	D-TV/LD	K6	K16	—		—
17	CBL/SAT	K6	K17	—		—
18	VCR1	K6	K18	K35	VCR1	—
19	VCR2/DVR	K6	K19	K35	VCR2	—
20	DVD	K6	K20	K35	DVD	—

RX-V1000/RX-V1000RDS

YAMAHA

Service News

Audio

YAMAHA CORPORATION P.O. BOX 1, HAMAMATSU, JAPAN

BULLETIN NO. E-839

DATE: February 2001

RELATED BULLETIN NO.:

RX-V1000/RX-V1000RDS

Sound Interruptions During Playback of DVD

SYMPTOM: The sound is interrupted momentarily while playing Dolby Digital and DTS DVD's using the digital connection. This does not affect the picture, however the sound does not return even if the DVD is returned to the point where the sound interruption originally occurred. Note that this symptom occurs very rarely.

CAUSE: The sound interruption is caused by the tolerance in characteristics of the YSS928 (AC3D3) IC and only at the 48kHz sampling frequency.

SOLUTION: The tolerance in characteristics of the YSS928 can be eliminated by changing the program in the flash ROM. There are two methods to change the program. One is to replace the flash ROM and the other is to rewrite the program in the flash ROM through an external personal computer. When using the latter method, connect a personal computer to the RS232C terminal on the rear panel of this unit. The program data and the application software can be downloaded from the Yamaha AV Service Information System Home Page.

PART(S):

Ref. No.	Part No.	Description
IC527	XZ452H00	IC 4M FLASH ROM MBM29F400BC-70

SERVICING: Change the program only when the symptom occurs.

APPLICABILITY: **RX-V1000** From Y263011OQ and up
RX-V1000RDS From Y049001YO and up

Service News

Audio

YAMAHA CORPORATION P.O. BOX 1, HAMAMATSU, JAPAN

BULLETIN NO. E-865

DATE: December 2001

RELATED BULLETIN NO.:

RX-V800/HTR-5280
RX-V800RDS/RX-V1000
RX-V1000RDS

ON/OFF of TV Power Supply Changes Amplifier VR to Extremes

SYMPTOM: When the main power of the TV set is turned ON and OFF, the sound volume of the amplifier varies to the maximum or minimum level by itself. In the worst case, the excessive sound volume can even damage the speakers.

CAUSE: If the center speaker is placed on top of the TV set, electromagnetic noise emitted when the power supply to the TV set is turned ON and OFF enters the amplifier through the center speaker cable and then into the IC for VR as an error data. (At this time, the microprocessor is operating normally.)

SOLUTION: Add diodes between the digital type ground and analog type ground so that noise will not detour. Add 2 diodes 1SS133 between MG and E on the function circuit board in the reverse phase as shown in the photograph. (MG line of microprocessor IC526 between VSS pins 41 and 57.)

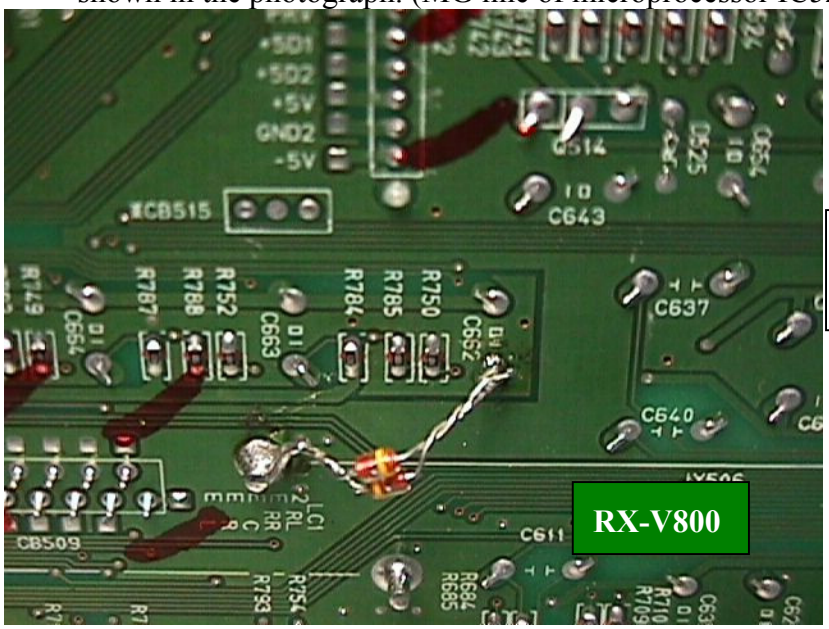

MG: Microprocessor ground (digital)
E: Audio ground (analog)

PART(S):

Part No.	Description
IF003450	DIODE 1SS133

SERVICING: Add diodes when the symptom is indicated.

APPLICABILITY: All

Service News

Audio

YAMAHA CORPORATION P.O. BOX 1, HAMAMATSU, JAPAN

BULLETIN NO. E-893

DATE: November 2002

RELATED BULLETIN NO.:

RX-V1000/RX-V800
RX-V1000RDS
RX-V800RDS/HTR-5280

Introduction of IC702 SMD (Surface Mounted Device) type

PURPOSE: The IC702 (TC74HC405) mounted on the Video (2) P.C.B. has been changed to the SMD (Surface Mounted Device) type (TC74HC4051AF) in the middle of its production. As they are different in shape, check the shape of the one being used for identification when placing an order. They are not interchangeable.

TC74HC4051AP

(XL493A00)

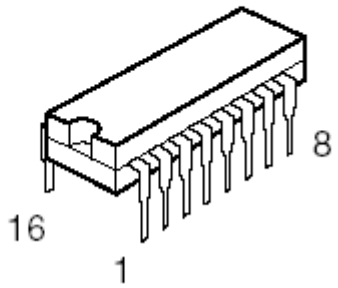

TC74HC4051AF

(XY549A00)

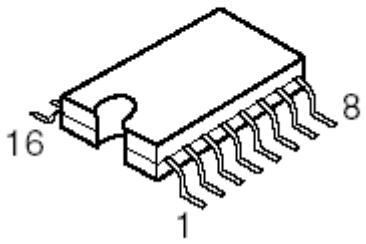

PART(S):

Ref. No.	Part No.	Description
IC702	XY549A00	IC TC74HC4051AF SMD Type
IC702	XL493A00	IC TC74HC4051AP DIP Type

Service News

Audio

YAMAHA CORPORATION P.O. BOX 1, HAMAMATSU, JAPAN

BULLETIN NO. E-936

DATE: June 2004

RELATED BULLETIN NO.:

RX-V800/RDS/HTR-5280
RX-V1000/RDS
RX-V3000/RDS/DSP-AX2

Introduction of Backup Capacitor with Longer Service Life

SYMPTOM: The power cannot be turned on, or the protection circuit is activated to turn off the power.

CAUSE: Fluid leakage occurs from the backup capacitor C633 0.047F 5.5V (C662 in the case of RX-V3000/DSP-AX2) on the Function PCB and causes a short with the adjacent components and between patterns, resulting in operation of the protection circuit. Fluid leakage tends to occur with this capacitor particularly with high internal cabinet temperatures, with or without the power on. Often, the leakage is only visible with very careful inspection.

SOLUTION: Two types of backup capacitors are now available with a longer expected service life. When servicing, thoroughly clean the leaked fluid from the PCB and from under any nearby components before replacing the capacitor. There are models other than those mentioned above that use the subject backup capacitor. Check them for fluid leakage and replace the capacitor as needed.

PART(S): **Old**

Ref. No.	Part No.	Description	Remarks
C633 or C662	VT740700 V3860300	ELECTROLYTIC CAP 0.047F/5.5V	Vertical type
*	VU545000	ELECTROLYTIC CAP 0.047F/5.5V	Horizontal type

↓

New

Ref. No.	Part No.	Description	Remarks
C633 or C662	WD294400	ELECTROLYTIC CAP 0.047F/5.5V	Vertical type
*	WD292000	ELECTROLYTIC CAP 0.047F/5.5V	Horizontal type

*** Applicative Models:** DSP-A1, DSP-AX1, RX-V1, DSP-AZ1, RX-Z1, RX-V3200 RX-V2200, RX-V1200, RX-V620, RX-V520, RX-V420 etc.

SERVICING: Carry out the modification when the above symptom is brought up.

APPLICABILITY: All