AV RECEIVER
RX-V520/RX-V520RDS/ HTR-5450/HTR-5450RDS
SERVICE MANUAL

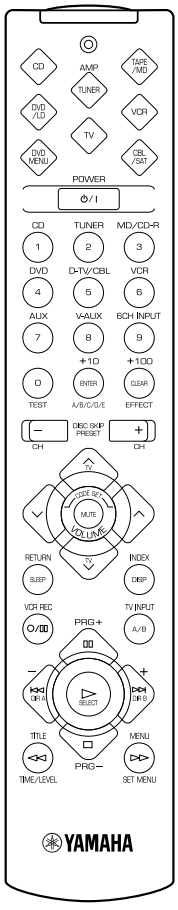

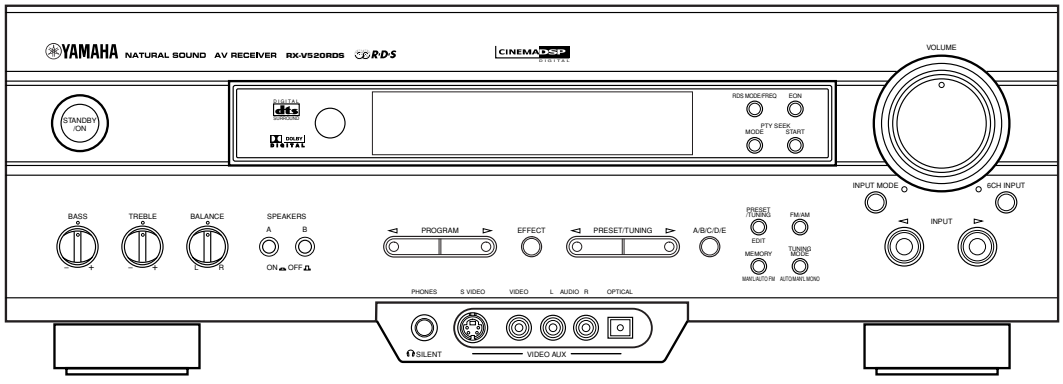

RX-V520/RX-V520RDS/ HTR-5450/HTR-5450RDS

IMPORTANT NOTICE

This manual has been provided for the use of authorized YAMAHA Retailers and their service personnel.
It has been assumed that basic service procedures inherent to the industry, and more specifically YAMAHA Products, are already known and understood by the users, and have therefore not been restated.

WARNING: Failure to follow appropriate service and safety procedures when servicing this product may result in personal injury, destruction of expensive components, and failure of the product to perform as specified. For these reasons, we advise all YAMAHA product owners that any service required should be performed by an authorized YAMAHA Retailer or the appointed service representative.

IMPORTANT: The presentation or sale of this manual to any individual or firm does not constitute authorization, certification or recognition of any applicable technical capabilities, or establish a principle-agent relationship of any form.

The data provided is believed to be accurate and applicable to the unit(s) indicated on the cover. The research, engineering, and service departments of YAMAHA are continually striving to improve YAMAHA products. Modifications are, therefore, inevitable and specifications are subject to change without notice or obligation to retrofit. Should any discrepancy appear to exist, please contact the distributor's Service Division.

WARNING: Static discharges can destroy expensive components. Discharge any static electricity your body may have accumulated by grounding yourself to the ground buss in the unit (heavy gauge black wires connect to this buss).

IMPORTANT: Turn the unit OFF during disassembly and part replacement. Recheck all work before you apply power to the unit.

■ CONTENTS

TO SERVICE PERSONNEL 1
IMPEDANCE SELECTOR 1
FRONT PANELS 2
REAR PANELS ..... 3~4
SPECIFICATIONS 5
INTERNAL VIEW 6
DISASSEMBLY PROCEDURES 7
SELF DIAGNOSIS FUNCTION (DIAG) ..... 8~24
AMP ADJUSTMENTS 24
DISPLAY DATA ..... 25~26
IC DATA ..... 27~32
BLOCK DIAGRAM ..... 33~36
PRINTED CIRCUIT BOARD ..... 37~52
IC BLOCK DIAGRAM ..... 53~54
SCHEMATIC DIAGRAM ..... 55~58
PARTS LIST ..... 59~73
REMOTE CONTROL TRANSMITTER ..... 74~76

このサービスマニュアルは、エコマーク認定の再生紙を使用しています。
This Service Manual uses recycled paper.

100755

YAMAHA
YAMAHA CORPORATION
P.O.Box 1, Hamamatsu, Japan

■ TO SERVICE PERSONNEL

1. Critical Components Information
   Components having special characteristics are marked ⚠ and must be replaced with parts having specifications equal to those originally installed.
2. Leakage Current Measurement (For 120V Models Only)
   When service has been completed, it is imperative to verify that all exposed conductive surfaces are properly insulated from supply circuits.

- Meter impedance should be equivalent to 1500 ohm shunted by 0.15µF.
- Leakage current must not exceed 0.5mA.
- Be sure to test for leakage with the AC plug in both polarities.

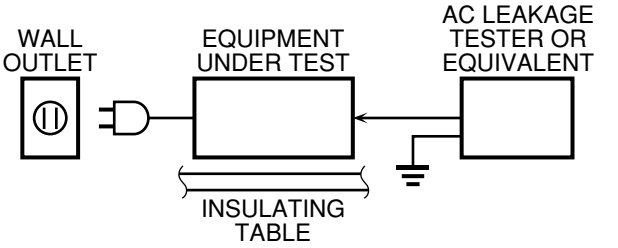

WARNING: CHEMICAL CONTENT NOTICE!

The solder used in the production of this product contains LEAD. In addition, other electrical/electronic and /or plastic (where applicable) components may also contain traces of chemicals found by the California Health and Welfare Agency (and possibly other entities) to cause cancer and/or birth defects or other reproductive harm.

DO NOT PLACE SOLDER, ELECTRICAL/ELECTRONIC OR PLASTIC COMPONENTS IN YOUR MOUTH FOR ANY REASON WHATSOEVER!

Avoid prolonged, unprotected contact between solder and your skin! When soldering, do not inhale solder fumes or expose eyes to solder/flux vapor!

If you come in contact with solder or components located inside the enclosure of this product, wash your hands before handling food.

■ IMPEDANCE SELECTOR

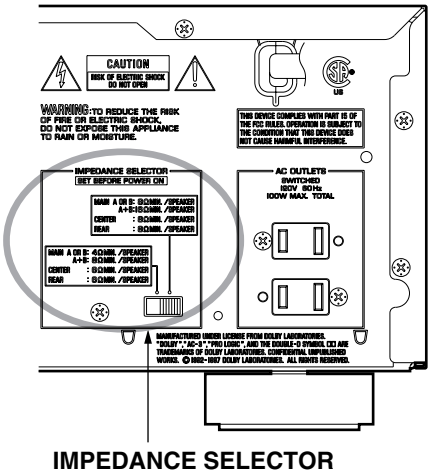

IMPEDANCE SELECTOR

WARNING:
Do not change the IMPEDANCE SELECTOR switch setting while the power to this unit is on, otherwise this unit may be damaged.

• DIMENSIONS

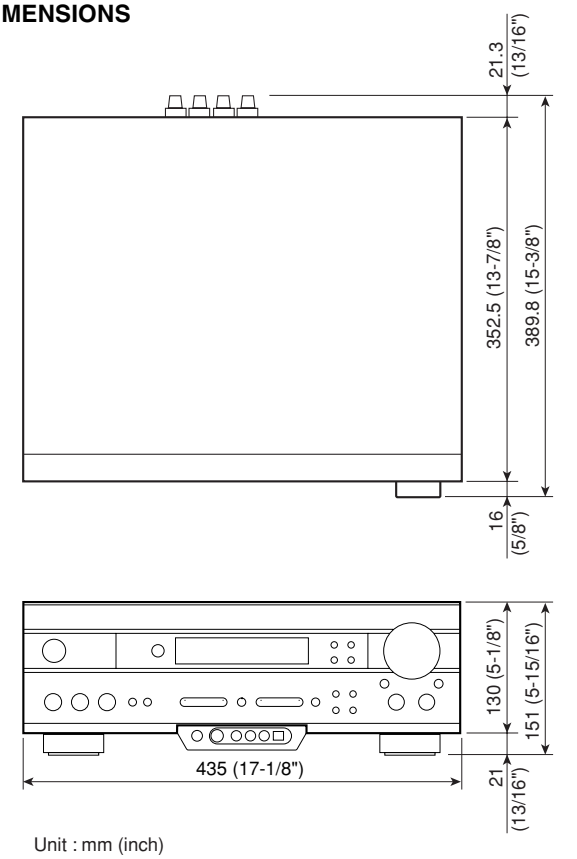

Unit : mm (inch)

■ FRONT PANELS

RX-V520 (U, C, A, L, R, T models)

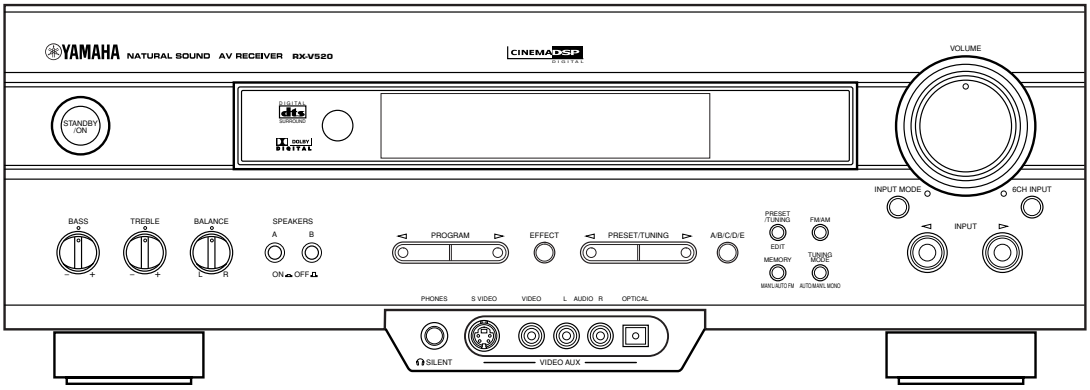

RX-V520RDS (B, G models)

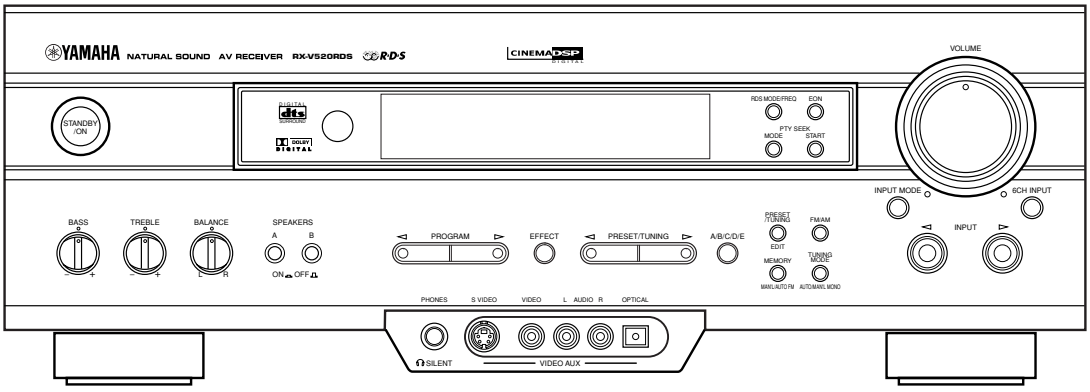

HTR-5450 (U, C, A, R, T models)

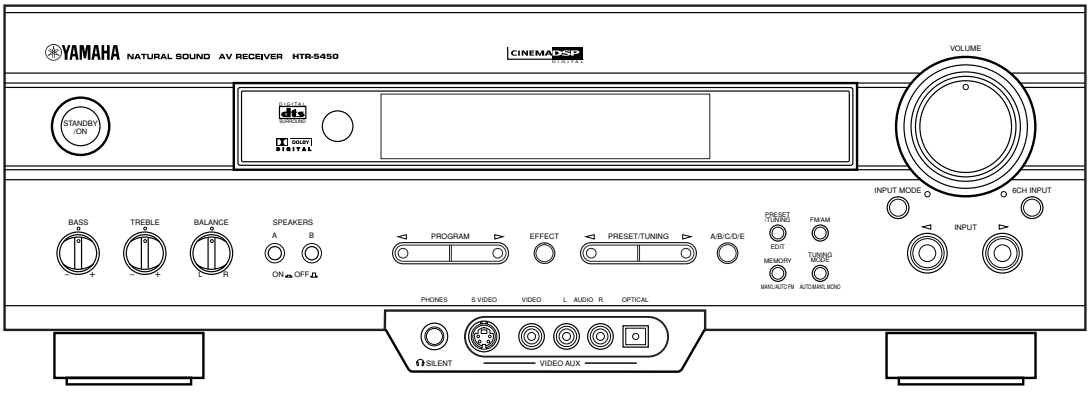

HTR-5450RDS (G model)

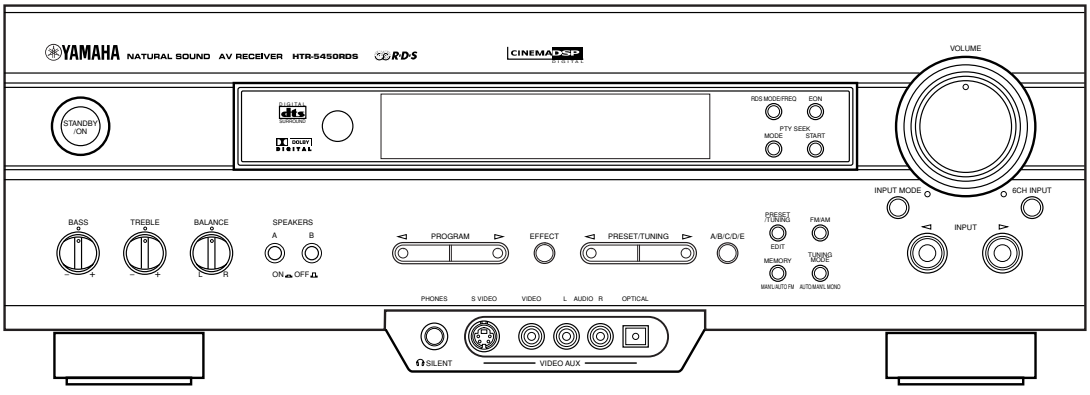

■ REAR PANELS

U model

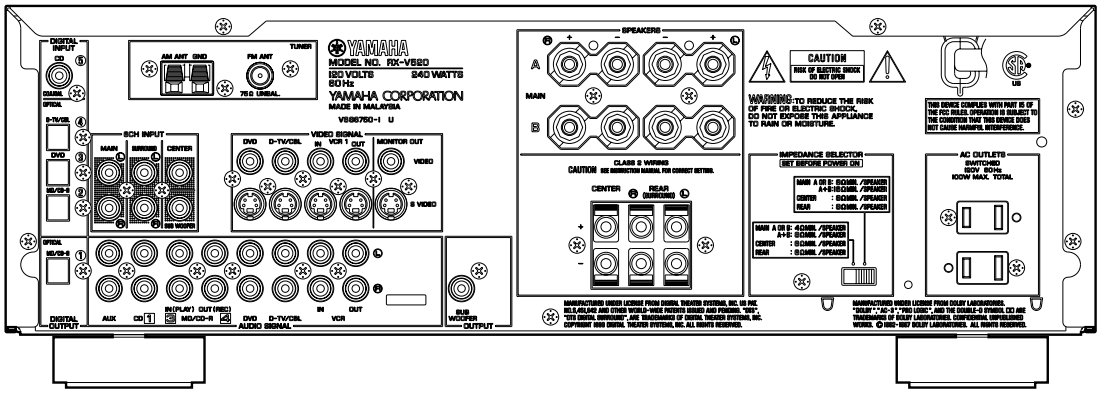

C model

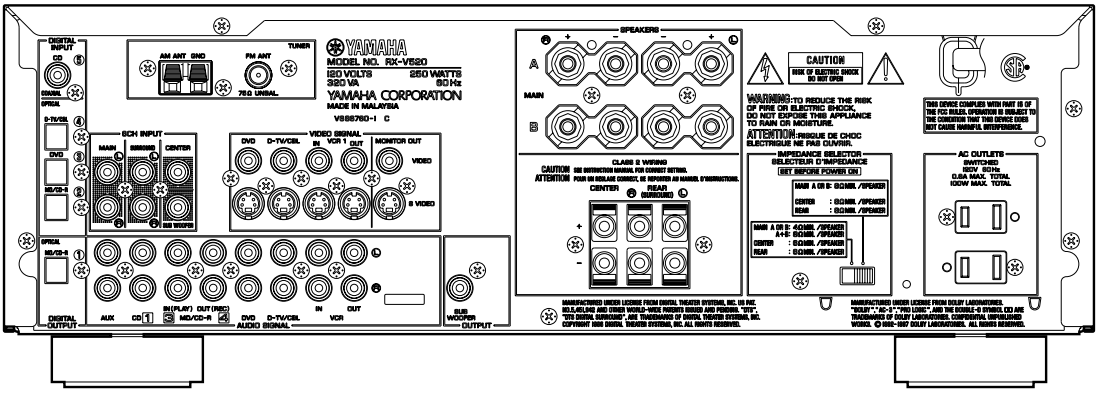

A model

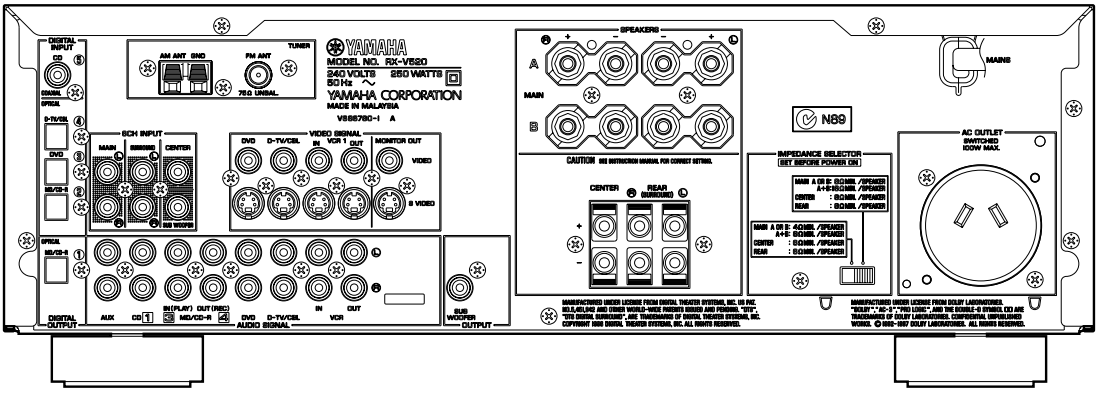

B model

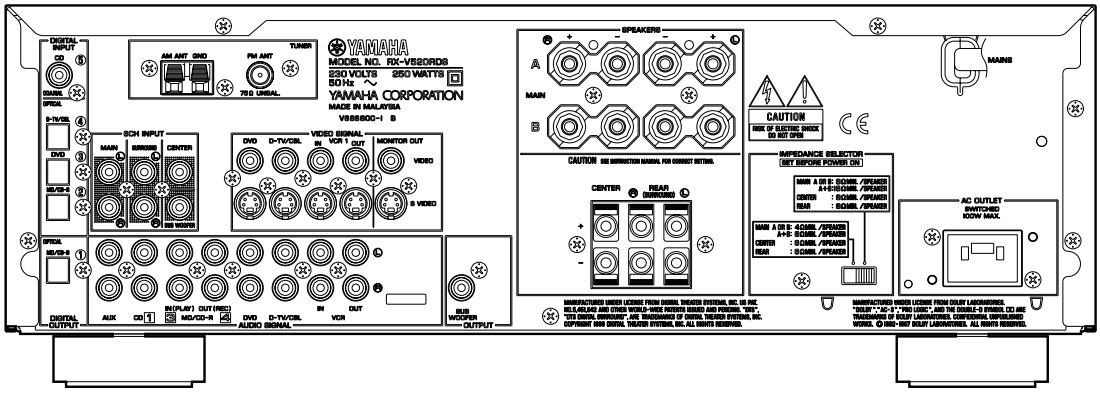

G model

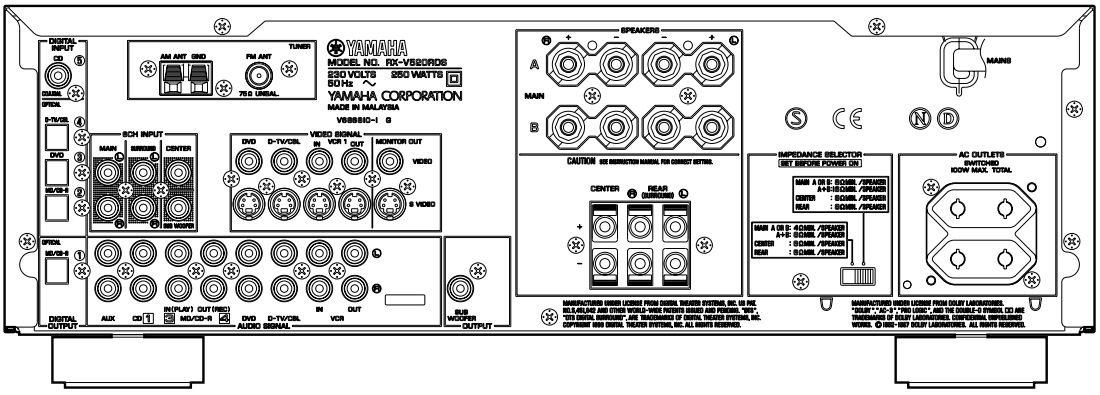

L model

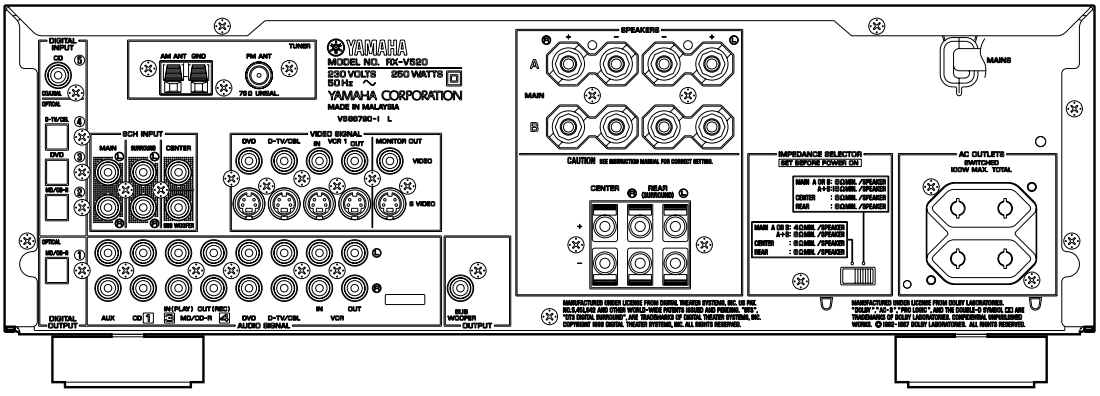

R, T model

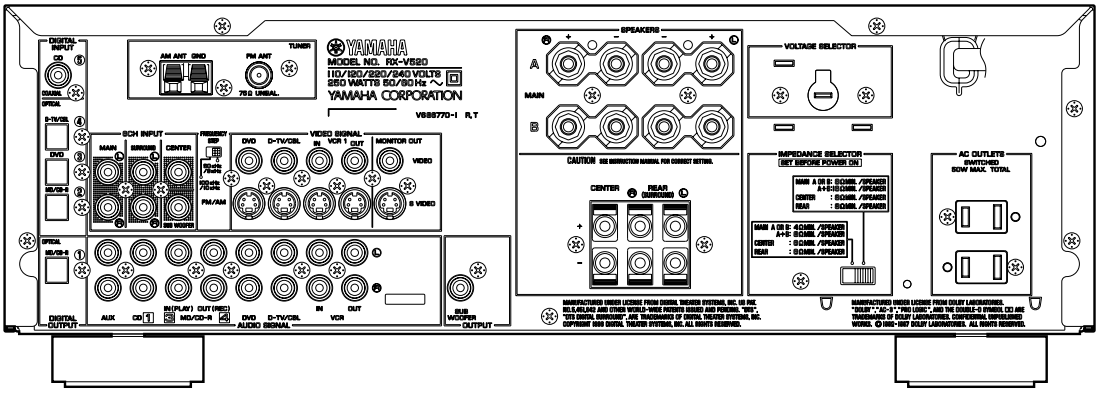

■ SPECIFICATIONS

■ Audio Section

Minimum RMS Output Power (Power Amp. Section)
(20 Hz to 20 kHz, 0.06% THD, 8 ohms)
MAIN
[U, C models] ..... 80W + 80W
[A, B, G, L, R, T models] ..... 70W + 70W
CENTER
[U, C models] 80W
[A, B, G, L, R, T models] 70W
REAR
[U, C models] ..... 80W + 80W
[A, B, G, L, R, T models] ..... 70W + 70W

Maximum Power (EIAJ) [R, T models]
(1 kHz, 10% THD, 8 ohms)
MAIN ..... 100W + 100W
CENTER 100W
REAR ..... 100W + 100W

Dynamic Power Per Channel (IHF)
MAIN L/R (8/6/4/2 ohms)
[U model] ..... 105/125/145/165 W
[C, A, B, G, L, R, T models] ..... 95/115/135/155 W

DIN Standard Output Power Per Channel
MAIN L/R (1 kHz, 0.7% THD, 4 ohms)
[G model] ..... 105W + 105W

Dynamic Headroom
8 ohms
[U, C models] ..... 1.18 dB

IEC Power
MAIN L/R (1 kHz, 0.06% THD, 8 ohms)
[G model] ..... 75W + 75W

Damping Factor
MAIN L/R (20 Hz to 20 kHz, 8 ohms) ..... 60 or more

Input Sensitivity / Input Impedance
CD, etc. ..... 150 mV / 47 k-ohms
EXT. DECODER
MAIN L/R ..... 150 mV / 47 k-ohms
CENTER, SURROUND L/R, SUBWOOFER ... 150 mV / 40 k-ohms

Maximum Input Signal Level
CD, etc. (1 kHz, 0.5% THD, Effect On) ..... 2.2 V

Output Level / Output Impedance
REC OUT ..... 150 mV / 1.2 k-ohms
SUB WOOFER [MAIN SP: Small] ..... 4 V/1.2 k-ohms

Headphone Jack Rated Output / Impedance
1 kHz, 150 mV, 8 ohms ..... 0.49 V / 390 ohms

Frequency Response
CD, etc. to MAIN (20 Hz to 20 kHz) ..... 0 ± 0.5 dB

Total Harmonic Distortion
(20 Hz to 20 kHz, 35 W / 8 ohms)
CD, etc. (EFFECT OFF) to MAIN SP OUT ..... 0.025% or less

Signal to Noise Ratio (IHF-A network)
CD, etc. (Input shorted, Effect Off) to MAIN SP OUT
150 mV ..... 96 dB or more
250 mV ..... 100 dB or more

Residual Noise (IHF-A netwok)
MAIN L/R SP OUT ..... 150 µV or less

Channnel Separation
(Vol -30 dB, Effect Off)
CD, etc. (Input 5.1 k-ohms terminated, 1 kHz) ..... 60 dB or more
CD, etc. (Input 5.1 k-ohms terminated, 10 kHz) ..... 45 dB or more

Tone Control Characteristics
Bass: Boost/Cut ..... ±10 dB (50 Hz)
Turnover Frequency ..... 350 Hz
Treble: Boost/Cut ..... ±10 dB (20 kHz)
Turnover Frequency ..... 3.5 kHz

Filter Characteristics
MAIN, Rear SP Small (H.P.F.) ..... 90 Hz, 12 dB/oct.
SUBWOOFER (L.P.F.) ..... 90 Hz, 18 dB/oct.

■ Video Section

Video Signal Type
[U, C, R, T models] ..... NTSC
[A, B, G, L, models] ..... PAL

Video Signal Level
..... 1 Vp-p / 75 ohms

S-Video Signal Level
Y ..... 1 Vp-p / 75 ohms
C ..... 0.286 Vp-p / 75 ohms

Maximum Input Level
..... 1.5 Vp-p

Signal to Noise Ratio
..... 50 dB or more

Monitor Out Frequency Response
S-Video Signal Level ..... 5 Hz to 10 MHz, -3 dB

■ FM Section

Tuning Range
[U, C models] ..... 87.5 to 107.9 MHz
[A, B, G, L models] ..... 87.5 to 108.0 MHz
[R, T models] ..... 87.5 to 108.0 / 87.50 to 108.00 MHz

50 dB Quieting Sensitivity (IHF)
(100% Mod)
Mono ..... 2.0 µV (17.3 dBf)
Stereo ..... 25 µV (39.2 dBf)

Usable Sensitivity (IHF)
Mono ..... 1.0 µV (11.2 dBf)

Selectivity
at 400 kHz ..... 70 dB

Signal to Noise Ratio (IHF)
Mono / Stereo ..... 76 dB / 70 dB

Harmonic Distortion
(1 kHz)
Mono/Stereo ..... 0.2 / 0.3 %

Stereo Separation
1 kHz ..... 45 dB

Frequency Response
20 Hz to 15 kHz ..... +0.5 / -2 dB

Antenna Input
..... 75 ohms unbalanced

■ AM Section

Tuning Range
[U, C models] ..... 530 to 1,710 kHz
[A, B, G, L models] ..... 531 to 1,611 kHz
[R, T models] ..... 530 to 1,710 / 531 to 1,611 kHz

Usable Sensitivity
..... 300 µV/m

Antenna
..... Loop Antenna

■ General

Power Supply
[U, C models] ..... AC 120 V, 60 Hz
[R, T models] ..... AC 110/120/220/240 V, 50/60 Hz
[A model] ..... AC 240 V, 50 Hz
[B, G, L models] ..... AC 230 V, 50 Hz

Power Consumption
[U model] ..... 240 W
[C model] ..... 250 W / 320 VA
[R, T, A, B, G, L models] ..... 250 W

Maximum Power Consumption
(5ch Drive, 10% THD)
[R model] ..... 500 W

AC Outlets
2 switched outlets
[U, C, G, L models] ..... 100W max., total
[R, T models] ..... 50W max., total
1 switched outlet
[A, B models] ..... 100W max.

Dimensions (W x H x D)
..... 435 x 151 x 390 mm (17-1/8" x 5-15/16" x 15-3/8")

Weight
..... 10.0 kg (22 lbs. 1 oz.)

Accessories
Remote control transmitter, Manganese batteries, Indoor FM antenna, AM loop antenna

* Specifications are subject to change without notice due to product improvements.

U ..... U.S.A. model	**C ..... Canadian model**
A ..... Australian model	**B ..... British model**
G ..... European model	**L ..... Singapore model**
R ..... General model	**T ..... China model**

Manufactured under license from Dolby Laboratories. "Dolby", "AC-3", "Pro Logic", and the double-D symbol ▯▯ are trademarks of Dolby Laboratories. © 1992-1997 Dolby Laboratories. All rights reserved.

Manufactured under license from Digital Theater Systems, Inc. US Pat. No. 5,451,942 and other world-wide patents issued and pending. "DTS", "DTS Digital Surround", are trademarks of Digital Theater Systems, Inc. copyright 1996 Digital Theater Systems, inc. All rights reserved.

• Set Menu Table

No.	SET MENU	PRESET VALUE	SETTING RANGES
1.	SPEAKER SET		
1A	CENTER SPEAKER	LARGE	LARGE/SMALL/NONE
1B	MAIN SPEAKER	LARGE	LARGE/SMALL
1C	REAR L/R SPEAKER	LARGE	LARGE/SMALL/NONE
1D	LFE/BASS OUT	BOTH	SUBWOOFER/MAIN/BOTH
1E	MAIN LEVEL	NORMAL	NORMAL/–10dB
2.	HP TONE CTRL	BASS : 0dB	–6dB — +3dB (1dB step)
		TREBLE : 0dB	–6dB — +3dB
3.	I/O ASSIGNING		
3A	OPTICAL OUT	(1) : MD/CD-R	DVD, MD/CD-R, D-TV/CBL, VCR, V-AUX, AUX, CD
3B	OPTICAL IN	(2) : MD/CD-R	CD, MD/CD-R, DVD, D-TV/CBL, VCR, AUX
		(3) : DVD	CD, DVD, D-TV/CBL, VCR, AUX
		(4) : D-TV/CBL	CD, D-TV/CBL, VCR, AUX
3C	COAXIAL IN	(5) : CD	CD, MD/CD-R, DVD, D-TV/CBL, VCR, V-AUX, AUX
4.	INPUT MODE	DVD : AUTO	AUTO/LAST
5.	DOLBY DIGITAL SET		
5A	LFE LEVEL	SPEAKER : 0dB	–20dB — 0dB
5B	DYNAMIC RANGE	SPEAKER : MAX	MAX/STD/MIN
6.	DTS SET		
	LFE LEVEL	SPEAKER : 0dB	–10dB — +10dB
7.	SPEAKER DELAY TIME	CENTER : 0ms	0ms — 5ms (1ms step)
8.	DISPLAY SET	DIMMER : 0	–4 — 0
9.	MEMORY GUARD	OFF	ON/OFF

■ INTERNAL VIEW

❶ MAIN (2) P.C.B.
❷ MAIN (7) P.C.B.
❸ MAIN (5) P.C.B.
❹ MAIN (8) P.C.B.
❺ MAIN (4) P.C.B.
❻ INPUT (3) P.C.B.
❼ INPUT (2) P.C.B.
❽ INPUT (6) P.C.B.
❾ DSP P.C.B.
❿ OPERATION (4) P.C.B.
⓫ INPUT (1) P.C.B.
⓬ OPERATION (3) P.C.B.
⓭ INPUT (4) P.C.B.
⓮ MAIN (1) P.C.B.
⓯ MAIN (6) P.C.B.
⓰ INPUT (5) P.C.B.
⓱ OPERATION (8) P.C.B.
⓲ OPERATION (7) P.C.B.
⓳ OPERATION (6) P.C.B.
⓴ OPERATION (1) P.C.B.
㉑ OPERATION (2) P.C.B.

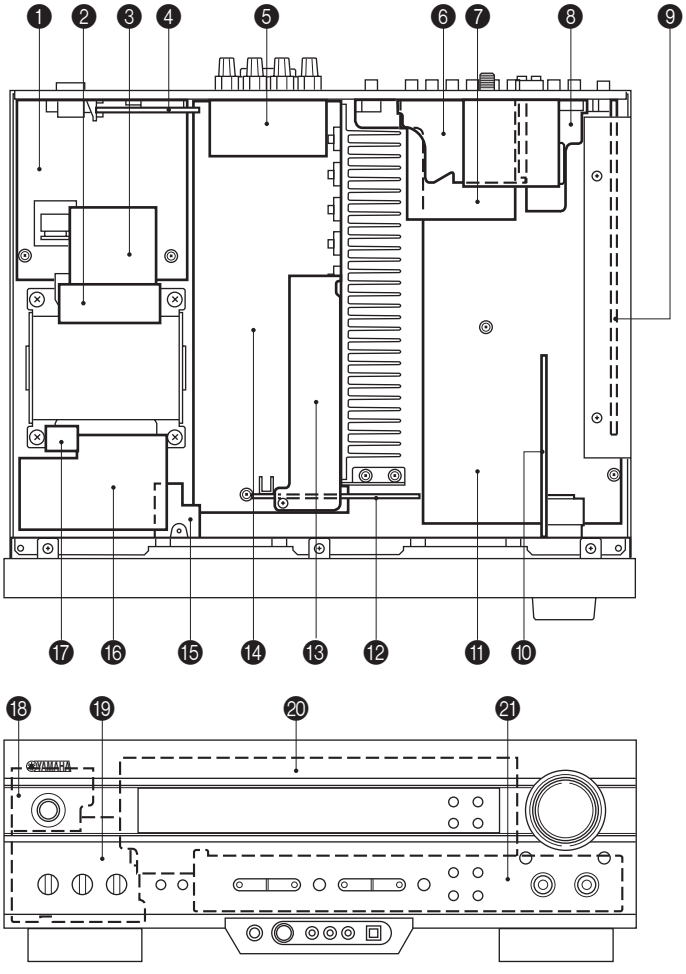

■ DISASSEMBLY PROCEDURES

(Remove parts in the order as numbered.)
Disconnect the power cord from the AC outlet.

1. Removal of Top Cover (Fig. 1)
a. Remove 4 screws (①) and 4 screws (②).
b. Slide the Top Cover rearward to remove it.

2. Removal of Front Panel (Fig. 1)
a. Remove the VOLUME control knob.
b. Remove 8 screws (③) and 1 screw (④).
c. Remove the Front Panel forward while releasing 2 claws at the bottom.

3. Removal of Sub Chassis (Fig. 1)
Remove 4 screws (⑤) and then remove the Sub Chassis forward.

4. Removal of DSP P.C.B. (Fig. 2)
a. Remove 6 screws (⑥) and 5 screws (⑦).
b. Remove the DSP P.C.B. upward together with the Shield Case.

5. Removal of MAIN (4) P.C.B. (Fig. 2)
Remove 2 screws (⑧). The Main (4) P.C.B. can then be removed.

6. Removal of MAIN (1) P.C.B.
a. Remove 5 screws (⑦), 2 screws (⑧), 2 screws (⑨) and 11 screws (⑩). (Fig. 2)
b. Remove 2 screws (⑪) and 1 screw (⑫). (Fig. 3)
c. To check the MAIN (1) P.C.B., spread a rubber sheet and a cloth over it. Then place the MAIN (1) P.C.B. upside down on the cloth for checking it. (Fig. 4)

Note:
When DSP P.C.B., MAIN (4) P.C.B. and MAIN (1) P.C.B. have been removed from the chassis, the ground connection becomes open. Connect the ground of each P.C.B. to the chassis by using a lead wire.

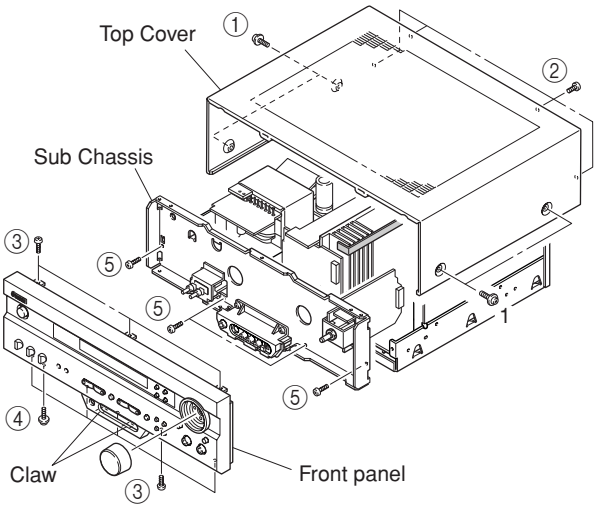

Fig. 1

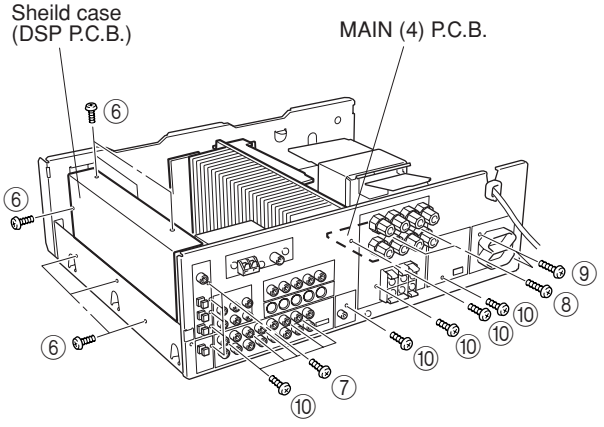

Fig. 2

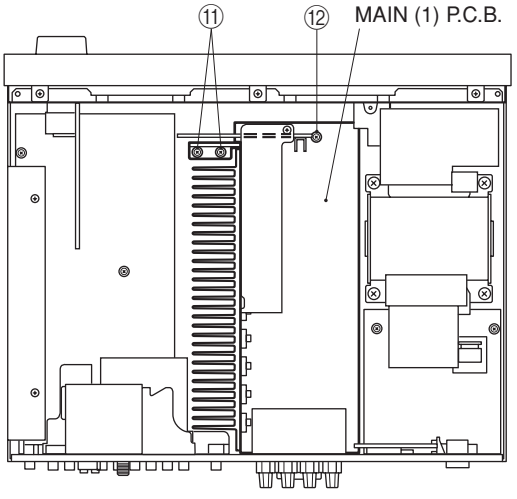

Fig. 3

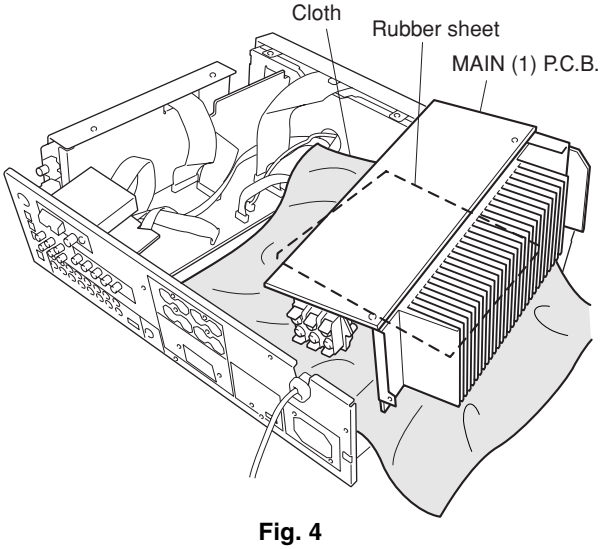

Fig. 4

■ SELF DIAGNOSIS FUNCTION (DIAG)

There are 14 DIAG menu items each of which has sub-menu items. Listed in the table below are menu items and sub-menu items.

No	DIAG menu	sub-menu	Remote control code (key)
1	DSP THROUGH 1.ANALOG BYPAS	1. ANALOG BYPASS	7A-88 (PRG 1)
		2. M, C, R, SW CH	7A-89 (PRG 2)
		3. Main HPF	7A-8A (PRG 3)
		4. FULL BIT	–
		5. FULL BIT F	–
2	FRONT CH 2.FRONT NORMAL	1. FRONT NORMAL	7A-8B (PRG 4)
		2. FRONT MIX	7A-8C (PRG 5)
3	RAM THROUGH 3.RAM 0DB	RAM 0dB (2ch/Multi)	7A-10 (PRESET+)
4	PRO LOGIC 4.PRO LOGIC	YSS928	7A-8D (PRG 6)
5	MARGIN CHECK 5.MAIN 3DB	1. MAIN 3dB Margin	7A-11 (PRESET-)
		2. MAIN 12dB Margin	7A-12 (P. PAGE)
		3. MAIN 18dB Margin	7A-0C (CD FW)
6	MAIN MIX 6.CENTER->MAIN	1. CENTER -> MAIN	7A-00 (TAPE PLAY)
		2. SW -> MAIN	7A-8E (PRG 7)
7	OTHER INPUT 7.EXTERNAL DEC	EXTERNAL DECODER	7A-8F (PRG 8)
8	DISPLAY CHECK	1. VFD DISP OFF (All segments OFF)	7A-01 (TAPE RW)
		2. VFD DISP ALL (All segments ON 100%)	7A-02 (TAPE FW)
		3. VFD DIMMER (All segments ON 50%)	–
		4. CHECKED PATTERN1 (ON in lattice)	7A-03 (TAPE STOP)
		5. CHECKED PATTERN2 (ON in lattice)	–
9	MANUAL TEST 9. TEST ALL	1. TEST ALL	7A-90 (PRG 9)
		2. TEST MAIN L	7A-04 (TAPE PAUSE)
		3. TEST CENTER	7A-05 (TAPE MUTE)
		4. TEST MAIN R	7A-06 (TAPE A/B)
		5. TEST REAR R	7A-07 (TAPE DIR A)
		6. TEST REAR L	7A-08 (CD PLAY)
		7. TEST LFE	7A-09 (CD STOP)
10	PRESET 10.PRESET INHI	1. PRESET INHIBIT (memory initialization inhibited)	–
		2. PRESET RESERVED (memory initialized)	7A-57 (SLEEP)
11	AD DATA CHECK DC:007 PS:025	1. DC/PS (protection)	7A-0B (CD SKIP-)
		2. IMP/PL (impedance/power limiter)	–
		3. 0/1/2 (panel key)	–
12	IF STATUS IST:3300020000	1. IST (internal status)	–
		2. CS1 (channel status 1)	–
		3. CS2 (channel status 2)	–
		4. CS3 (channel status 3)	–
		5. CS4 (channel status 4)	–
		6. CS5 (channel status 5)	–
		7. BI1 (BSI-DD 1)	–
		8. BI2 (BSI-DD 2)	–
		9. BI3 (BSI-DD 3)	–
		10. BI4 (BSI-DD 4)	–
		11. BS1 (BSI-DTS 1)	–
		12. BS2 (BSI-DTS 2)	–
		13. BS3 (BSI-DTS 3)	–
		14. BS4 (BSI-DTS 4)	–
		15. YS1 (YSS928-1)	–
		16. YS2 (YSS928-2)	–
		17. YS3 (YSS928-3)	–
13	DSP RAM CHECK BUS CHECK:NOER	BUS CHECK	7A-0A (CD SKIP+)
14	VERSION/CHECK SUM/PORT VER:B1114 FS62	1. VER. (Version information)	7A-0D (CD REW)
		2. 1/2 (Checksum 1/2)	–
		3. PORT (Port check)	–

• Starting DIAG

Press the “POWER ” (STANDBY/ON) key of the main unit while pressing the “FM/AM ” key and the “INPUT MODE ” key simultaneously, and DIAG will be activated.

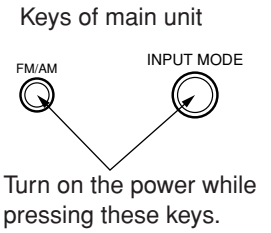

• Starting DIAG in the protection cancel mode

If the protection function activates and causes hindrance to trouble diagnosis, disable the protection function as described below, and it will be possible to enter the DIAG mode. (The protection function other than the excess current detect function will be disabled.)

Press the “POWER" (STANDBY/ON) key while pressing the “FM/AM" key and the “INPUT MODE" key simultaneously. At this time, keep pressing the “FM/AM" key and the “INPUT MODE" for 3 seconds or longer.

In this mode, “SLEEP” in the FL display of the main unit flashes.

CAUTION!

Using this product with the protection function disabled may cause damage to itself. Use special care for this point when using this mode.

• Canceling DIAG

Turn off the power by pressing the “POWER” (STANDBY/ON) key of the main unit or the “STANDBY” key of the remote control unit.

CAUTION: When canceling this function, check that DIAG menu No.10 PRESET (memory initialization inhibited/reserved) has been set. [To keep the user memory, be sure to select “INHI” (initialization inhibited) from the No.10 PRESET menu before canceling the DIAG function.]

• Display at the start of DIAG

On the FL display of the main unit, an opening message (including the version and the protection history) appears for a few seconds followed by the diagnostic menu display of 1. ANALOG BYPAS.

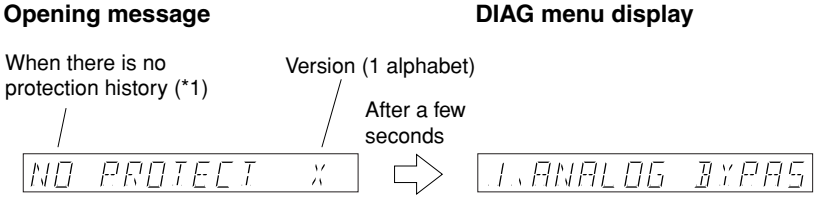

(*1) If a protection function history has been recorded, the type of the protection function and the voltage value recorded last are displayed.

If the protection function activates after DIAG has been started and the power is turned off;

When the protection function (*2) activates, the protection function history appears on the display and the power turns off. Repair the faulty parts according to the displayed history.

(*2) When an excess current or any other faulty condition is found with the power source, DC, etc., the protection function forces the power to turn off.

I PROTECT X

I PROTECT display

(When the power is turned on without this abnormality corrected, the protection function activates the moment the power relay is turned on to shut off the power relay. The display will not light.)

Cause: There is an abnormal current flow to the power amplifier.

Supplementary information: As the current of the power transistor of each channel is detected, the abnormal channel can be identified by checking the current detect transistor.

PS PRT >000 %

PS PRT display
(When the power is turned on without this abnormality corrected, the protection function activates about 1 second later to shut off the power relay. Display may not light if there is an abnormality with the power supply for the display.)
Cause: There is an abnormality in the power supply section (voltage).
Supplementary information: As the power from the following sources is detected, it is possible to determine where an abnormality exists.

Main (5): Transformer secondary winding
CB222 (AC voltage)

Input (4): Regulated power supplies
±25, +12A, +12B, -12, +5D

DC PRT >000 %

DC PRT display
(When the power is turned on without this abnormality corrected, the protection function activates about 3 seconds later to shut off the power relay.)
Cause: A DC output from the power amplifier of any channel is detected.

Besides the above possible causes, the cause may be a disconnected connector or around the CPU.
PS PRT and DC PRT displays include the abnormal A/D value in % (voltage value obtained by considering 5V as 100%). Concerning this value, refer to DIAG menu No.11 AD DATA CHECK.

• Protection history
When the protection function has activated, its history is stored in memory with a memory backup. Even when no abnormality is noted while the unit is being serviced, an abnormality which has occurred previously can be defined as long as the backup data has been stored. The protection history should always be cleared before returning the unit from service.
The protection history is cleared when DIAG is cancelled by selecting "RSRV" (Memory initialization) from the setting items of the DIAG menu No.10 PRESET or when the backup data is erased.

• Operation procedure of DIAG menu and SUB-MENU

There are 14 MENU items and some SUB-MENU items as well.

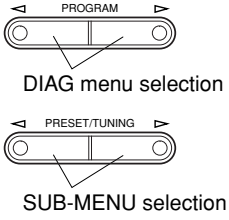

DIAG menu selection

Main unit: Select the menu using ∞ (Forward) and ◁ (Reverse) keys of PROGRAM.
Remote control unit: Select the menu using ▯▯ (Forward) and ▭ (Reverse) keys.

SUB-MENU selection

Main unit: Select the sub-menu using ∞ (Forward) and ◁ (Reverse) keys of PRESET/TUNING.
Remote control unit: Select the sub-menu using ▷▷| (Forward) and |◁◁ (Reverse) keys.

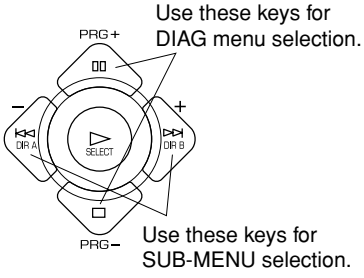

* Only the remote control keys indicated in the MENU List can be used to select a sub-menu directly.

• Functions available during DIAG

In addition to the DIAG menu, functions as listed below are available.
• Input selection, 6CH input
• Center/Rear/Sub-woofer level adjustment
• Muting
• Power on/off operation

* Functions related to the tuner and the set menu are not available.
* It is possible to confirm Menu No.12 "IF STATUS" while keeping the signal process (operation status) of each DIAG menu by using the INPUT MODE key of the main unit.

• Initial settings used to start DIAG function

Following initial settings are used when starting the DIAG function.
When the DIAG function is canceled, the settings before starting DIAG will be restored.

- Input : DVD (6CH INPUT OFF)
- Center/Rear/Sub-woofer level : 0dB
- Audio mute : OFF
- Speaker settings
  - MAIN, CENTER, REAR : LARGE
  - BASS OUT : BOTH
  - MAIN LEVEL : Normal (0dB)
- DIAG menu : DSP THROUGH (1. ANALOG BYPASS)

• Details of DIAG menu

1. DSP THROUGH

There are 5 sub-menu items.

1.ANALOG BYPAS

ANALOG BYPASS [Remote control code: 7A-88 (PRG 1)]

- The input mode is fixed to use the analog (A/D) system.
- The L/R signal is output through the analog bypass without using the DSP block.

Reference data
INPUT: DVD ANALOG
SWFR: 50Hz, Others: 1kHz

Condition	MAIN L/R	CENTER	RL/RR	SWFR
Both ch, -20 dBV, volume -10 dB	13.5 dBV	- ∞	- ∞	- ∞

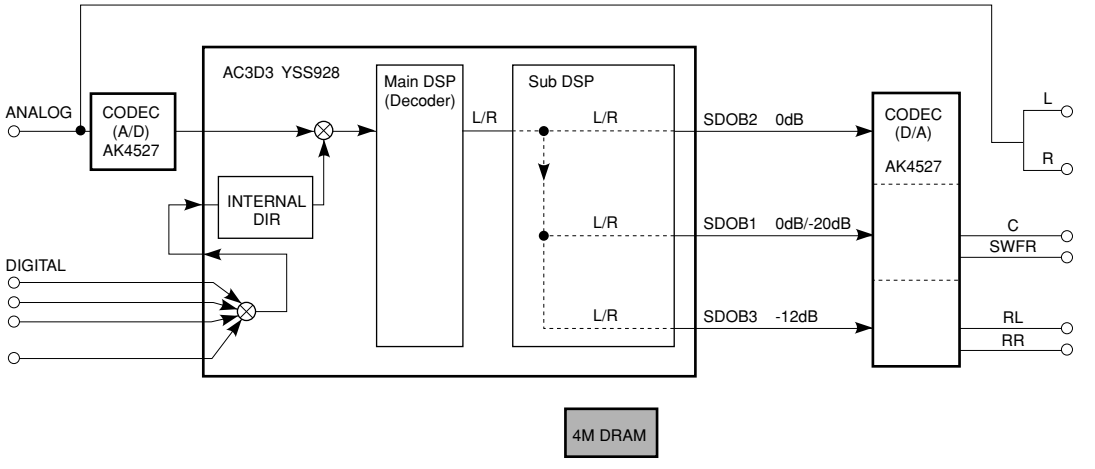

SDOxx represents a terminal name of AC3D3.

The shaded square ( ) means that the element indicated in it does not operate.

M, C, R, SW CH [Remote control code: 7A-89 (PRG 2)]

- The input signal is automatically identified and switched in the priority order of dts ➔ DOLBY DIGITAL ➔ PCM AUDIO ➔ Analog (A/D) according to the signal detection.
- L/R, C/SWF, RL/RR signals are output through DSP (see the signal path in the figure below) without using the external DRAM. (Head margin included)

Head margin:
L/R: 0dBFS, Center: 0dBFS, RL/RR: -12dBFS, SWFR: Add L/R signal at -20dBFS.

Reference data
INPUT: DVD ANALOG
SWFR: 50Hz, Others: 1kHz

Condition	MAIN L/R	CENTER	RL/RR	SWFR
Both ch, -20 dBV, volume -10 dB	22.5 dBV	12.5 dBV	10.0 dBV	-6.5 dBV

[2ch source]

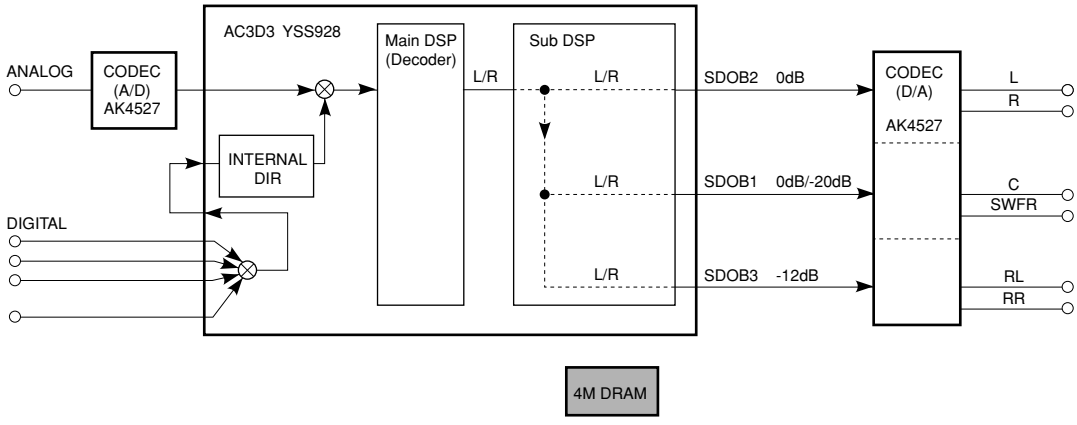

[Multi ch source] AC3D3 outputs signals using DOLBY DIGITAL/dts decode operation.

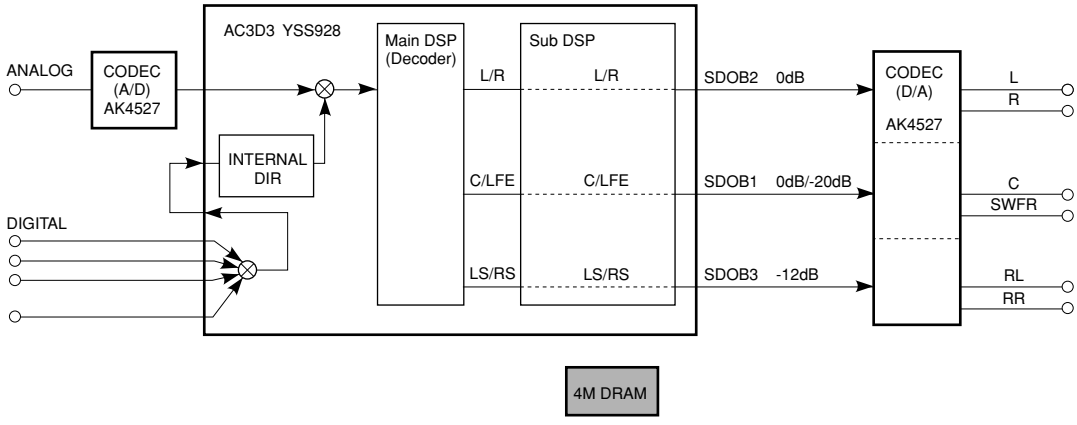

SDOxx represents a terminal name of AC3D3.

The shaded square ( ) means that the element indicated in it does not operate.

MAIN HPF [Remote control code: 7A-8A (PRG 3)]

1.MAIN HPF

- MAIN HPF is turned on and output. (Head margin included)

Head margin:
L/R: 0/-3/-12/-18dBFS, Center: Mute, RL/RR: Mute, SWFR: Mute.

Reference data
INPUT: DVD ANALOG
SWFR: 50Hz, Others: 1kHz

Condition	MAIN L/R	CENTER	RL/RR	SWFR
Both ch, -20 dBV, volume -10 dB	22.5 dBV	- ∞	- ∞	- ∞

[2ch/Multi] *Multi: Lo/Ro Down Mix

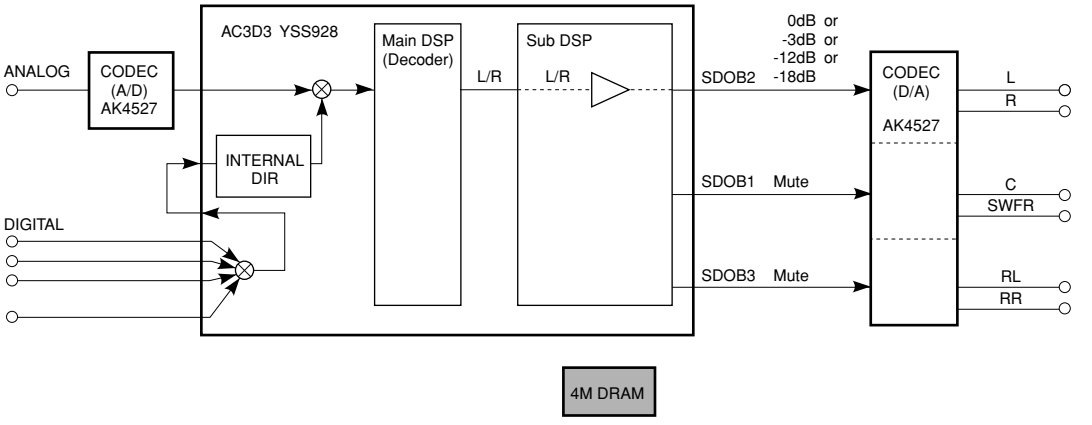

SDOxx represents a terminal name of AC3D3.

The shaded square ( ) means that the element indicated in it does not operate.

FULL BIT [Remote control code: –]

1.FULL BIT

- The signal is output in digital full bit without including the head margin.
- The same applies as “M, C, R, SW CH” except that the digital data is output in full bit at D/A.

Reference data
INPUT: DVD ANALOG
SWFR: 50Hz, Others: 1kHz

Condition	MAIN L/R	CENTER	RL/RR	SWFR
Both ch, -20 dBV, volume -10 dB	22.5 dBV	16.0 dBV	22.0 dBV	13.5 dBV

FULL BIT F [Remote control code: –]

1.FULL BIT F

- The front channel signal is output in full bit to the main channel.

Reference data
INPUT: DVD ANALOG
SWFR: 50Hz, Others: 1kHz

Condition	MAIN L/R	CENTER	RL/RR	SWFR
Both ch, -20 dBV, volume -10 dB	22.5 dBV	16.0 dBV	22.0 dBV	13.5 dBV

[2ch source]

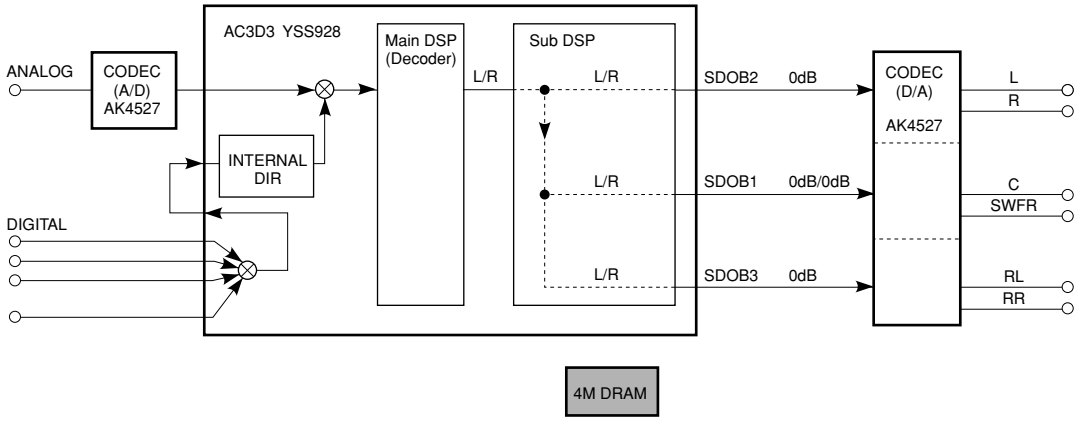

[Multi ch source] AC3D3 outputs signals using DOLBY DIGITAL/dts decode operation.

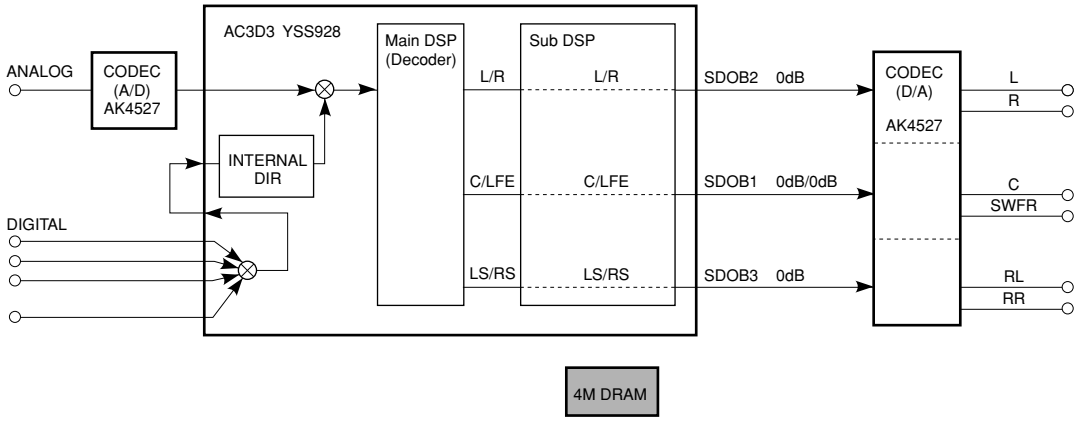

SDOxx represents a terminal name of AC3D3.

The shaded square ( ) means that the element indicated in it does not operate.

2. FRONT CH

The input signal is automatically identified and switched in the priority order of dts ➔ DOLBY DIGITAL ➔ PCM AUDIO ➔ Analog (A/D) according to the signal detection.
The front channel signal is output in full bit to the main channel.
Signals are output through DSP (see the signal path in the figure below) without using the external DRAM. (Head margin included)

FRONT NORMAL [Remote control code: 7A-8B (PRG 4)]

2.FRONT NORMAL

- The head margin is included and the front channel signal is output to the main channel.

Head margin:
L/R: Mute, Center: Mute, RL/RR: Mute, SWFR: Mute.

Reference data
INPUT: DVD ANALOG
SWFR: 50Hz, Others: 1kHz

Condition	MAIN L/R	CENTER	RL/RR	SWFR
Both ch, -20 dBV, volume -10 dB	- ∞	- ∞	- ∞	- ∞

FRONT MIX [Remote control code: 7A-8C (PRG 5)]

2.FRONT MIX

- The head margin is included and the front channel signal is output to the main channel.

Head margin:
L/R: 0dBFS, Center: Mute, RL/RR: Mute, SWFR: Mute.

Reference data
INPUT: DVD ANALOG
SWFR: 50Hz, Others: 1kHz

Condition	MAIN L/R	CENTER	RL/RR	SWFR
Both ch, -20 dBV, volume -10 dB	22.5 dBV	- ∞	- ∞	- ∞

[2ch/Multi] *Multi: Lo/Ro Down Mix

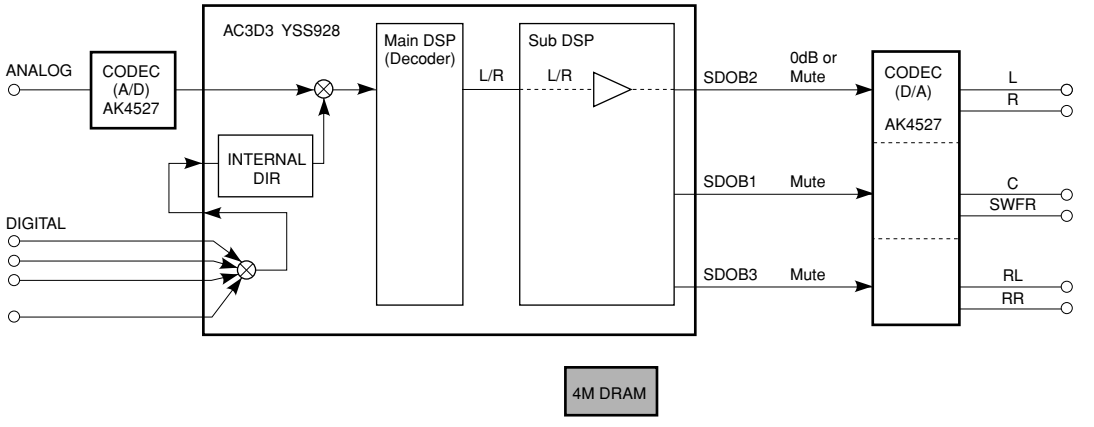

SDOxx represents a terminal name of AC3D3.

The shaded square ( ) means that the element indicated in it does not operate.

3. RAM THROUGH

The input signal is automatically identified and switched in the priority order of dts ➔ DOLBY DIGITAL ➔ PCM AUDIO ➔ Analog (A/D) according to the signal detection.
The Center and RL/RR signals are output through the external DRAM.

3.RAM 0DB

RAM 0dB [REMOTE CONTROL CODE: 7A-10 (PRESET+)]

Reference data
INPUT: DVD ANALOG
SWFR: 50Hz, Others: 1kHz

Condition	MAIN L/R	CENTER	RL/RR	SWFR
Both ch, -20 dBV, volume -10 dB	-1.4 dBV	16.0 dBV	- ∞	- ∞

[2ch/Multi] *Multi: Lo/Ro Down Mix

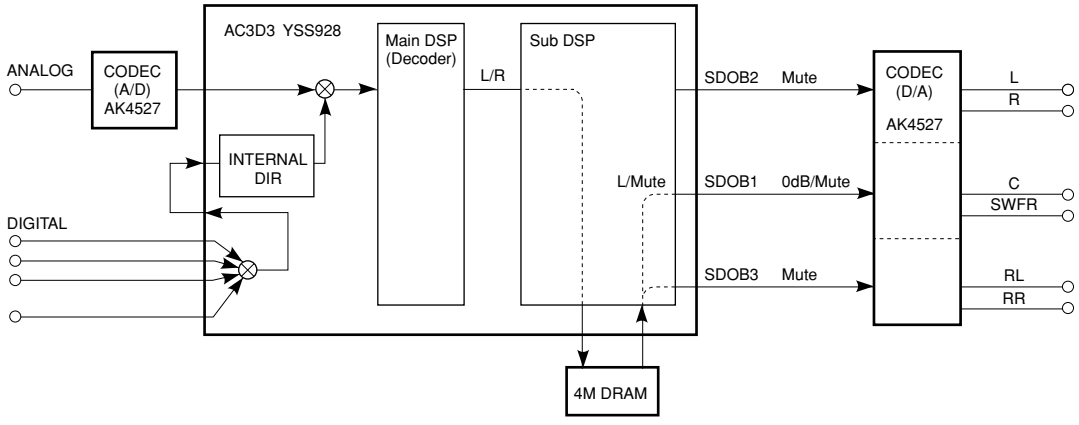

4. PRO LOGIC [YSS928]

The input signal is automatically identified and switched in the priority order of dts ➔ DOLBY DIGITAL ➔ PCM AUDIO ➔ Analog (A/D) according to the signal detection.
Operation conforming to the ordinary Dolby Normal sound field is provided.

[REMOTE CONTROL CODE: 7A-8D (PRG 6)]

4.PRO LOGIC

- Same as ordinary Pro Logic except that the auto input balance function is off.

Reference data
INPUT: DVD ANALOG
SWFR: 50Hz, Others: 1kHz

Condition	MAIN L/R	CENTER	RL/RR	SWFR
Both ch, -20 dBV, volume -10 dB	-18.0 dBV	16.0 dBV	- ∞	- ∞

[2ch] *Multi: All Mute

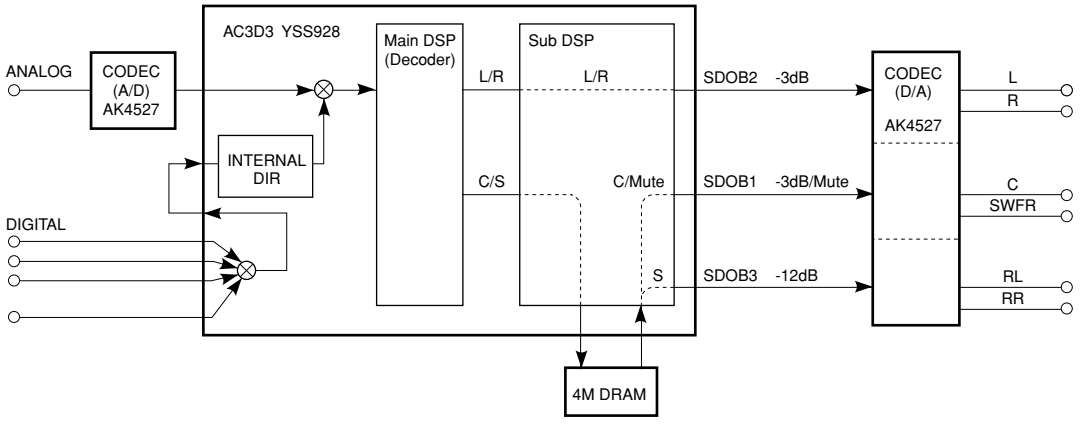

5. MARGIN CHECK

The input signal is automatically identified and switched in the priority order of dts ➔ DOLBY DIGITAL ➔ PCM AUDIO ➔ Analog (A/D) according to the signal detection.
There are 3 sub-menu items.
The head margin of the main channel can be set to -3dB/-12dB/-18dB.

MAIN 3dB Margin [Remote control code: 7A-11 (PRESET-)]

5.MAIN 3DB

MAIN 12dB Margin [Remote control code: 7A-12 (P. PAGE)]

5.MAIN 12DB

MAIN 18dB Margin [Remote control code: 7A-0C (CD FW)]

5.MAIN 18DB

Reference data
INPUT: DVD ANALOG
SWFR: 50Hz, Others: 1kHz

Sub-menu	Condition	L/R	CENTER	RL/RR	SWFR
MAIN 3dB	Both ch, -20 dBV, volume -10 dB	20 dBV	- ∞	- ∞	- ∞
MAIN 12dB	Both ch, -20 dBV, volume -10 dB	10.5 dBV	- ∞	- ∞	- ∞
MAIN 18dB	Both ch, -20 dBV, volume -10 dB	4.8 dBV	- ∞	- ∞	- ∞

[2ch/Multi] *Multi: Lo/Ro Down Mix

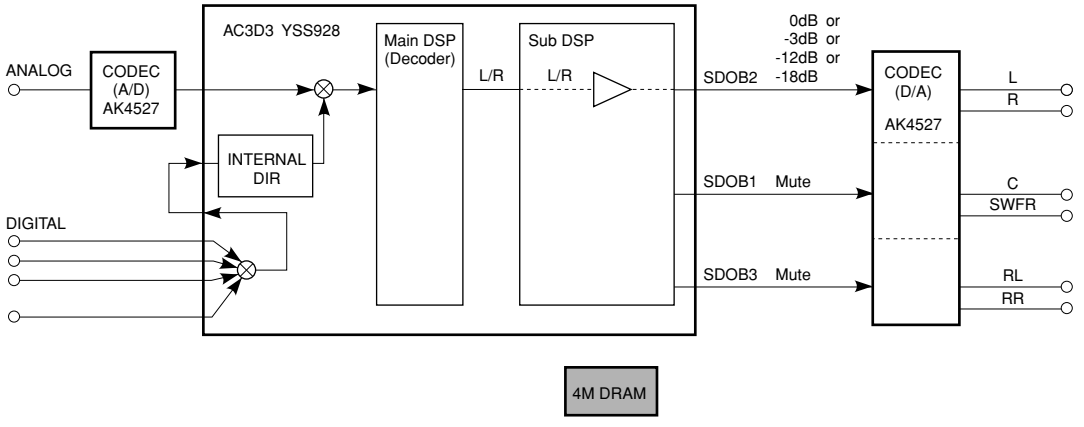

SDOxx represents a terminal name of AC3D3.

The shaded square ( ) means that the element indicated in it does not operate.

6. MAIN MIX

The input signal is automatically identified and switched in the priority order of dts ➔ DOLBY DIGITAL ➔ PCM AUDIO ➔ Analog (A/D) according to the signal detection.
There are 2 sub-menu items.
The center and SW signals are output through the main channel.

CENTER -> MAIN [Remote control code: 7A-00 (TAPE PLAY)]

6.CENTER->MAIN

- The center signal is output through the main channel.

Reference data
INPUT: DVD ANALOG
SWFR: 50Hz, Others: 1kHz

Condition	MAIN L/R	CENTER	RL/RR	SWFR
Both ch, -20 dBV, volume -10 dB	0 dBV	13.0 dBV	- ∞	- ∞

[2ch/Multi] *Multi: Lo/Ro Down Mix

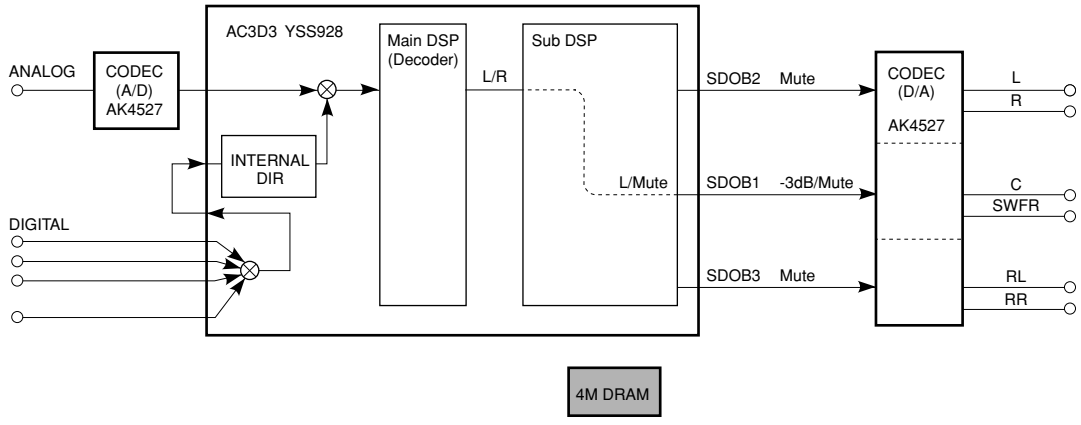

SW -> MAIN [Remote control code: 7A-8E (PRG 7)]

6. SW ->MAIN

- The SW signal is output through the main channel.

Reference data
INPUT: DVD ANALOG
SWFR: 50Hz, Others: 1kHz

Condition	MAIN L/R	CENTER	RL/RR	SWFR
Both ch, -20 dBV, volume -10 dB	- ∞	- ∞	- ∞	-7.0 dBV

[2ch/Multi] *Multi: Lo/Ro Down Mix

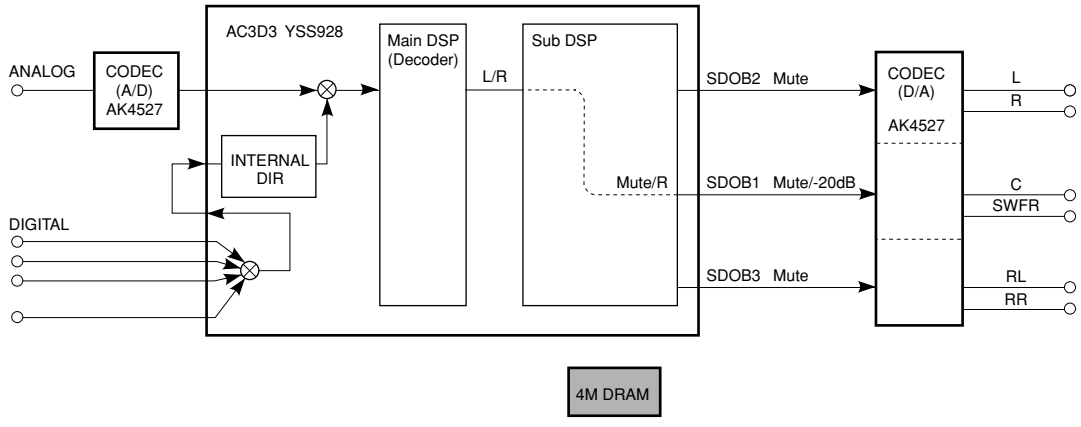

SDOxx represents a terminal name of AC3D3.

The shaded square ( ) means that the element indicated in it does not operate.

7. OTHER INPUT

The signal inputted through the 6CH INPUT terminals is output.

EXTERNAL DECODER [Remote control code: 7A-8F (PRG 8)]

7.EXTERNAL DEC

Reference data
INPUT: 6CH INPUT
SWFR: 50Hz, Others: 1kHz

Condition	MAIN L/R	CENTER	RL/RR	SWFR
Both ch, -20 dBV, volume -10 dB	13.5 dBV	13.5 dBV	13.5 dBV	-7.0 dBV

8. DISPLAY CHECK

This program is used to check the FL display section. The display condition varies as shown below according to the sub-menu operation. The signals are processed using EFFECT OFF (The L/R signal is output using ANALOG MAIN BYPASS.)

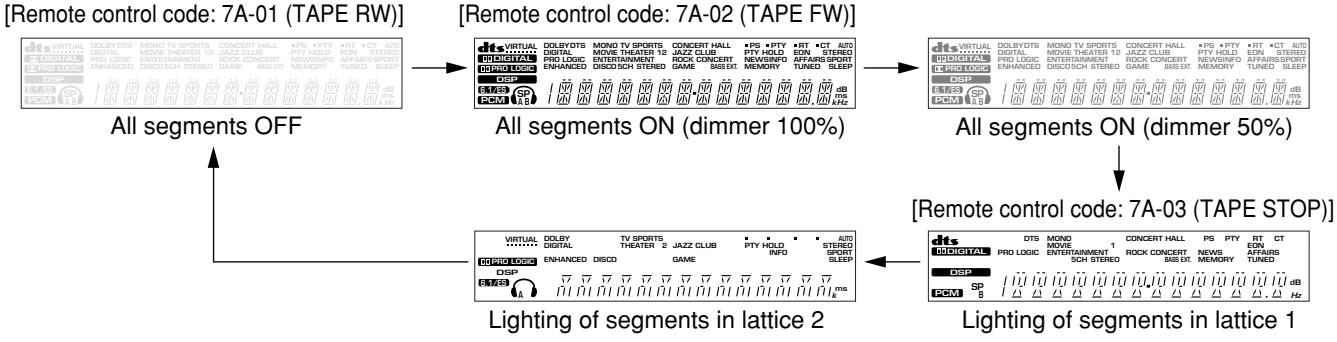

Segment conditions of the FL driver and the FL tube are checked by turning ON and OFF all segments. Next, the operation of the FL driver is checked by using the dimmer control. Then a short between segments next to each other is checked by turning ON and OFF all segments alternately (in lattice).

9. MANUAL TEST

The noise generator with a built-in DSP outputs the test noise through the channels specified by the sub-menu.
The noise frequency for LFE is 35 to 250 Hz. Other than that, the center frequency is 800Hz.

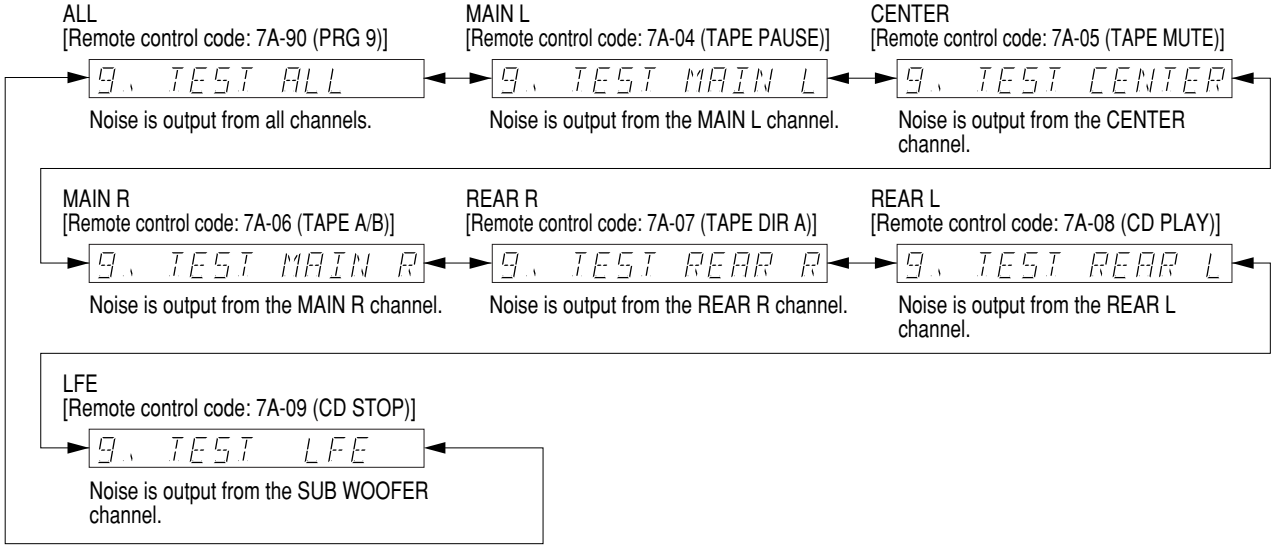

10. PRESET

This menu is used to reserve and inhibit initialization of the back-up RAM. The signals are processed using EFFECT OFF. (The L/R signal is output using ANALOG MAIN BYPASS.)

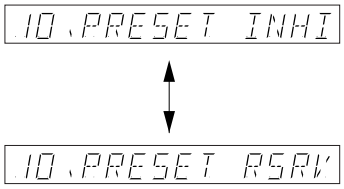

PRESET INHIBIT (Initialization inhibited) [REMOTE CONTROL CODE: –]
RAM initialization is not executed. Select this sub-menu to protect the values set by the user.

PRESET RESERVED (Initialization reserved) [REMOTE CONTROL CODE: 7A-57 (SLEEP)]
Initialization of the back-up RAM is reserved. (Actually, initialization is executed next time when the power is turned on.) Select this sub-menu to reset when shipped out of the factory or to reset RAM.

CAUTION: Before setting to the PRESET RESERVED, write down the existing preset memory content of the Tuner in a table as shown below. (This is because setting to the PRESET RESERVED will cause the user memory content to be erased.)

Preset group	P1	P2	P3	P4	P5	P6	P7	P8
A								
B								
C								
D								
E								

• PRESET STATIONS

STATION		FM FACTORY PRESET DATA (MHz)	
PAGE	NO.	U, C, R, T	R, T, A, B, G, L
A/C/E	1	87.5	87.5
	2	90.1	90.1
	3	95.1	95.1
	4	98.1	98.1
	5	107.9	108.0
	6	88.1	88.1
	7	106.1	106.1
	8	107.9	108.0

STATION		AM FACTORY PRESET DATA (kHz)	
PAGE	NO.	U, C, R, T	R, T, A, B, G, L
B/D	1	630	630
	2	1080	1080
	3	1440	1440
	4	530	531
	5	1710	1611
	6	900	900
	7	1350	1350
	8	1400	1404

11. AD DATA CHECK

This menu is used to display the A/D conversion value of the main CPU which detects panel keys of the main unit and protection functions in % using the sub-menu. (Reference voltage 5V as 100%) During signal processing, the condition before execution is maintained.

When in 0/1/2 page, it is not possible to operate the keys of the main unit because the values of all keys are detected. During signal processing, the condition before execution of this menu is maintained.

DC:007 PS:025

DC/PS (Detection of the protection function) [REMOTE CONTROL CODE: 7A-0B (CD SKIP-)]

DC: DC detect protection value (Normal value: 3 to 35)

PS: Power voltage protection value (Normal value: 120 to 170)

* If DC or PS is out of the normal value range, the protection function activates to turn off the power relay.

IMP:4 PL:020

IMP/PL (Detection of impedance/Power limit) [Remote control code: –]

KY2: Detection of impedance switch

PL: The value of the power limit

0:FF 1:FF 2:FF

0/1/2 (Panel key of main unit) [Remote control code: –]

A/D of the key fails to function properly when the standard value is deviated by ±4%. In this case, check the constant of partial pressure resistor, solder condition, etc. Refer to table 1.

[Table 1]

Display	K0	K1	K2
00	SEEK MODE	MEMORY	◁ PROGRAM
27	SEEK START	TUNING MODE	PROGRAM ∞
3F	EON	FM/AM	EFFECT
5A	RDS MODE	EDIT	INPUT MODE
73	–	A/B/C/D/E	◁ INPUT
8C	–	PRESET/TUNING ∞	INPUT ∞
A7	–	◁ PRESET/TUNING	6CH INPUT
FF	KEY OFF	KEY OFF	KEY OFF

12. IF STATUS

Using the sub-menu, the status data is displayed one after another in the hexadecimal notation.
During signal processing, the status before execution of this menu is maintained.

* Numeric values in the figure example are for reference.

IST (Internal status) [REMOTE CONTROL CODE: –]
Indicates the status information of the microprocessor.

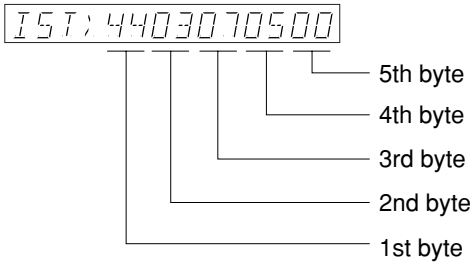

<1st byte> Digital input/output setting value
Upper 4 bits: REC OUT selected/lower 4 bits: INPUT selected

Numeric value	Selection	Numeric value	Selection	Numeric value	Selection	Numeric value	Selection
0	NONE	4	OPT3 (D-TV/CBL)	8	COAX1 (CD)	C	COAX3
1	FRONT (VIDEO AUX)	5	OPT4	9	COAX2	D	RF
2	OPT1 (MD/CDR)	6	OPT5	A	COAX4		
3	OPT2 (DVD)	7	OPT6	B	COAX5		

<2nd byte> Fs information of reproduction signal

Display	00	01	02	03	04	05	06	07	08	09
Fs (kHz)	Analog	32	44.1	48	64	88.2	96	Unknown NRM	Unknown DBL	Undefined

<3rd byte> Audio code mode information of reproduction signal

Display	00	01	02	03	04	05	06	07	08	09	0A	0B
Audio Code	1+1	1/0	2/0	3/0	2/1	3/1	2/2	3/2	2/3	3/3	dts7.1	Undefined

<4th byte> Format information of reproduction signal
(*1): Digital reproduction cannot be used due to a commercial bit or 4 ch audio reason. Analog reproduction is used instead.

Display	Signal format
00	Analog (Unlock)
01	Incorrect digital (*1)
02	Digital Data
03	IEC1937 Data
04	PCM Audio
05	Dolby Digital
06	D.D.Karaoke
07	D.D.EX
08	RED dts
09	ORANGE dts
0A	dts ES
0B	NONE PCM

<5th byte> Signal processing status information
(*2): With digital signals other than 32kHz, 44.1kHz and 48kHz, through processing method is used for reproducible signals.

bit7	MUTE request	bit3	–
bit6	Red dts flashing	bit2	Through & bypass (*2)
bit5	6.1ch. field being processed	bit1	–
bit4	FULL MUTE (ON: 1)	bit0	dts analog mute

CS1-5 [Remote control code: -]: Indicates channel status information of the input signal (IEC60958).

CS1:0299000200 ----- CS5:00000000

BI1-4 [Remote control code: -]: Indicates bit stream information included in the DOLBY DIGITAL signal.

BI1:1C40E130 13 ----- BI4:F500F800

BS1-4 [Remote control code: -]: Indicates bit stream information included in the dts signal.

BS1:FFFFFFFFFF ----- BS4:FFFFFFFF

YS1-3 [Remote control code: -]: Indicates device status information of YSS928 (IC801). * The numeric value in the figure is an example for reference.

YS1:FE02 18070F YS2:0 10 14 18000 YS3: 1A4 18030

Byte No.	Function
1	YSS MUTE Reg
2	YSS MODE Reg
3	YSS IPORT BIT 7-0
4	YSS IPORT BIT 14-8
5	YSS OPORT

Byte No.	Function
1	IEC 1937 Preamble Pc
2	AC-3 Data Stream No
3	AC-3D Decode Status
4	YSS ZERO Reg
5	MIREG

Byte No.	Function
1	DIR Status
2	DIR fs
3	DIR fs count
4	YSS ZEROBF

13. DSP RAM CHECK

This menu is used to self-diagnose whether or not bus connection of YSS928 (IC801) and the external RAM (IC802) is made properly.
During signal processing, the status before execution of this menu is maintained.

BUS CHECK:NOER

Bus Check [Remote control code: 7A-0A (CD SKIP+)]
The address bus and the data bus are checked and the connection condition is displayed.
When no error is detected, "NOER" appears on display.

Display	Description
WAIT	Bus being checked.
NOER	No error detected.
DATA	Data bus shorted or open.
ADDR	Address bus shorted or open.

14. MICROPROCESSOR INFORMATION

There are 3 sub-menu items.

The version, checksum and the port specified by the microprocessor are displayed. The signal is processed using EFFECT OFF. The checksum is obtained by adding the data at every 16 bits for each program area and expressing the result as a 4-figure hexadecimal data.

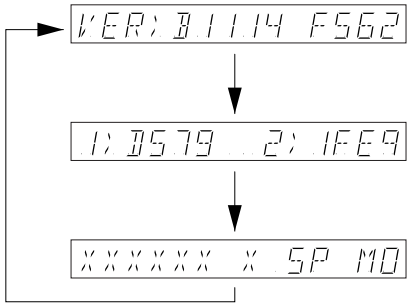

Version [Remote control code: 7A-0D (CD REW)]
Release 1 figure / Main 2 figures / DSP 2 figures / Communication 1 figure / Boot manufacturer 1 figure / Boot 232c 1 figure

Checksum [Remote control code: –]
1 : All 2 : Program area

Port indication [Remote control code: –]
Model name, Destination, Headphone detection, FM stereo

■ AMP ADJUSTMENT

Confirmation and Adjustment of Idling Current of Main (1) P. C. B.

- Right after the power is turned on, confirm that the voltages at R53, R55, R59, R65 and R67 are between 0.1mV and 5mV.
- If any exceed 5mV, cut R27, R33, R39, R43 or R47.
- Reconfirm that they are between 0.1mV and 5mV.
- The voltages should be 0.1mV ~ 5mV after the power has been on for 60 minutes.

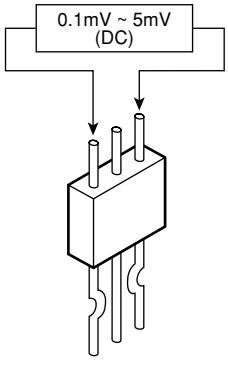

R53 (MAIN Lch)
R55 (MAIN Rch)
R67 (CENTER)
R59 (REAR Lch)
R65 (REAR Rch)

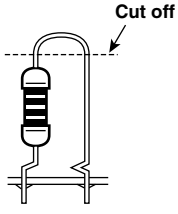

R27 (MAIN Lch)
R33 (MAIN Rch)
R47 (CENTER)
R39 (REAR Lch)
R43 (REAR Rch)

■ DISPLAY DATA

● **V301 : 10-BT-235GNK (V6840400)**

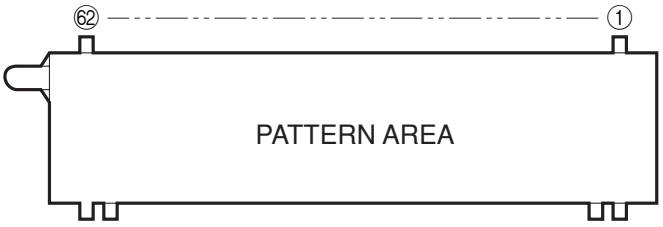

● **PIN CONNECTION**

Pin No.	50	49	48	47	46	45	44	43	42	41	40	39	38	37	36	35	34	33	32	31	30	29	28	27	26
Connection	9G	10G	NX	NX	NX	NX	NX	NX	NX	NX	NX	P35	P34	P33	P32	P31	P30	P29	P28	P27	P26	P25	P24	P23	P22

Pin No.	25	24	23	22	21	20	19	18	17	16	15	14	13	12	11	10	9	8	7	6	5	4	3	2	1
Connection	P21	P20	P19	P18	P17	P16	P15	P14	P13	P12	P11	P10	P9	P8	P7	P6	P5	P4	P3	P2	P1	NP	NP	F1	F1

Note : 1) F1, F2 ..... Filament 2) NP ..... No pin 3) NX ..... No extend pin 4) DL ..... Datum Line 5) 1G ~ 10G ..... Grid

● **GRID ASSIGNMENT**

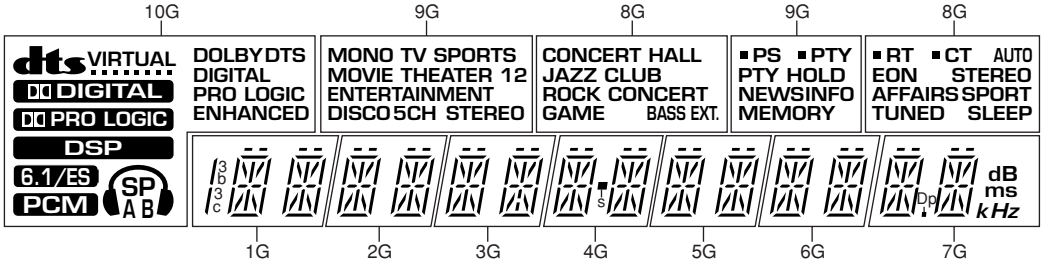

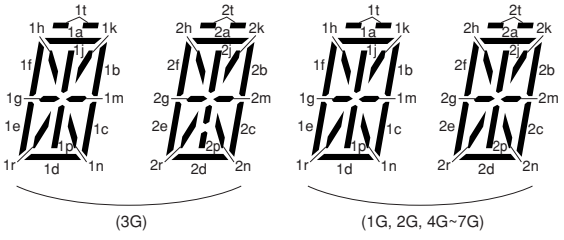

● **ANODE CONNECTION**

	10G	9G	8G	7G	6G	5G	4G	3G	2G	1G
P1	dts	MONO	CONCERT HALL	1t	1t	1t	1t	1t	1t	1t
P2	VIRTUAL	TV SPORTS	JAZZ CLUB	1a	1a	1a	1a	1a	1a	1a
P3	DD DIGITAL	MOVIE	ROCK CONCERT	1b	1b	1b	1b	1b	1b	1b
P4	DD PRO LOGIC	THEATER	GAME	1h	1h	1h	h1	1h	1h	1h
P5	DSP	1	BASS EXT.	1j	1j	1j	1j	1j	1j	1j
P6	6.1/ES	2	■ (RT)	1k	1k	1k	1k	1k	1k	1k
P7	PCM	ENTERTAINMENT	RT	1f	1f	1f	1f	1f	1f	1f
P8	🎧	DISCO	■ (CT)	1g	1g	1g	1g	1g	1g	1g
P9	SP	5CH STEREO	CT	1m	1m	1m	1m	1m	1m	1m
P10	A	■ (PS)	AUTO	1c	1c	1c	1c	1c	1c	1c
P11	B	PS	EON	1n	1n	1n	1n	1n	1n	1n
P12	DOLBY	■ (PTY)	STEREO	1p	1p	1p	1p	1p	1p	1p
P13	DTS	PTY	AFFAIRS	1r	1r	1r	1r	1r	1r	1r
P14	DIGITAL	PTY HOLD	SPORT	1e	1e	1e	1e	1e	1e	1e
P15	PRO LOGIC	NEWS	TUNED	1d	1d	1d	1d	1d	1d	1d
P16	ENHANCED	INFO	SLEEP	2t	2t	2t	2t	2t	2t	2t
P17	–	MEMORY	–	2a	2a	2a	2a	2a	2a	2a
P18	–	–	–	2b	2b	2b	2b	2b	2b	2b
P19	–	–	–	2h	2h	2h	2h	2h	2h	2h
P20	–	–	–	2j	2j	2j	2j	2j	2j	2j
P21	–	–	–	2k	2k	2k	2k	2k	2k	2k
P22	–	–	–	2f	2f	2f	2f	2f	2f	2f
P23	–	–	–	2g	2g	2g	2g	2g	2g	2g
P24	–	–	–	2m	2m	2m	2m	2m	2m	2m
P25	–	–	–	2c	2c	2c	2c	2c	2c	2c
P26	–	–	–	2n	2n	2n	2n	2n	2n	2n
P27	–	–	–	2p	2p	2p	2p	2p	2p	2p
P28	–	–	–	2r	2r	2r	2r	2r	2r	2r
P29	–	–	–	2e	2e	2e	2e	2e	2e	2e
P30	–	–	–	2d	2d	2d	2d	2d	2d	2d
P31	–	–	–	Dp	–	–	s	–	–	3b, 3c
P32	–	–	–	*k*	–	–	–	–	–	–
P33	–	–	–	*Hz*	–	–	–	–	–	–
P34	–	–	–	ms	–	–	–	–	–	–
P35	–	–	–	dB	–	–	–	–	–	–

■ IC DATA

IC801 : YSS928
DSP

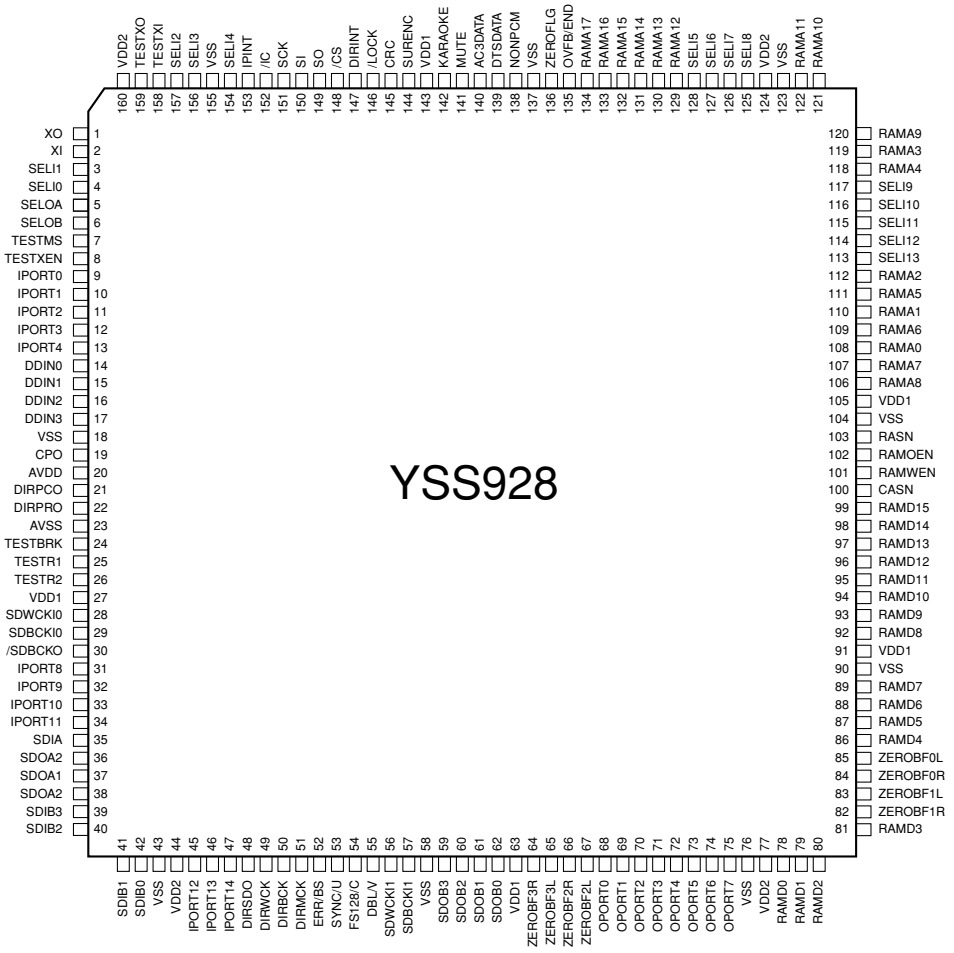

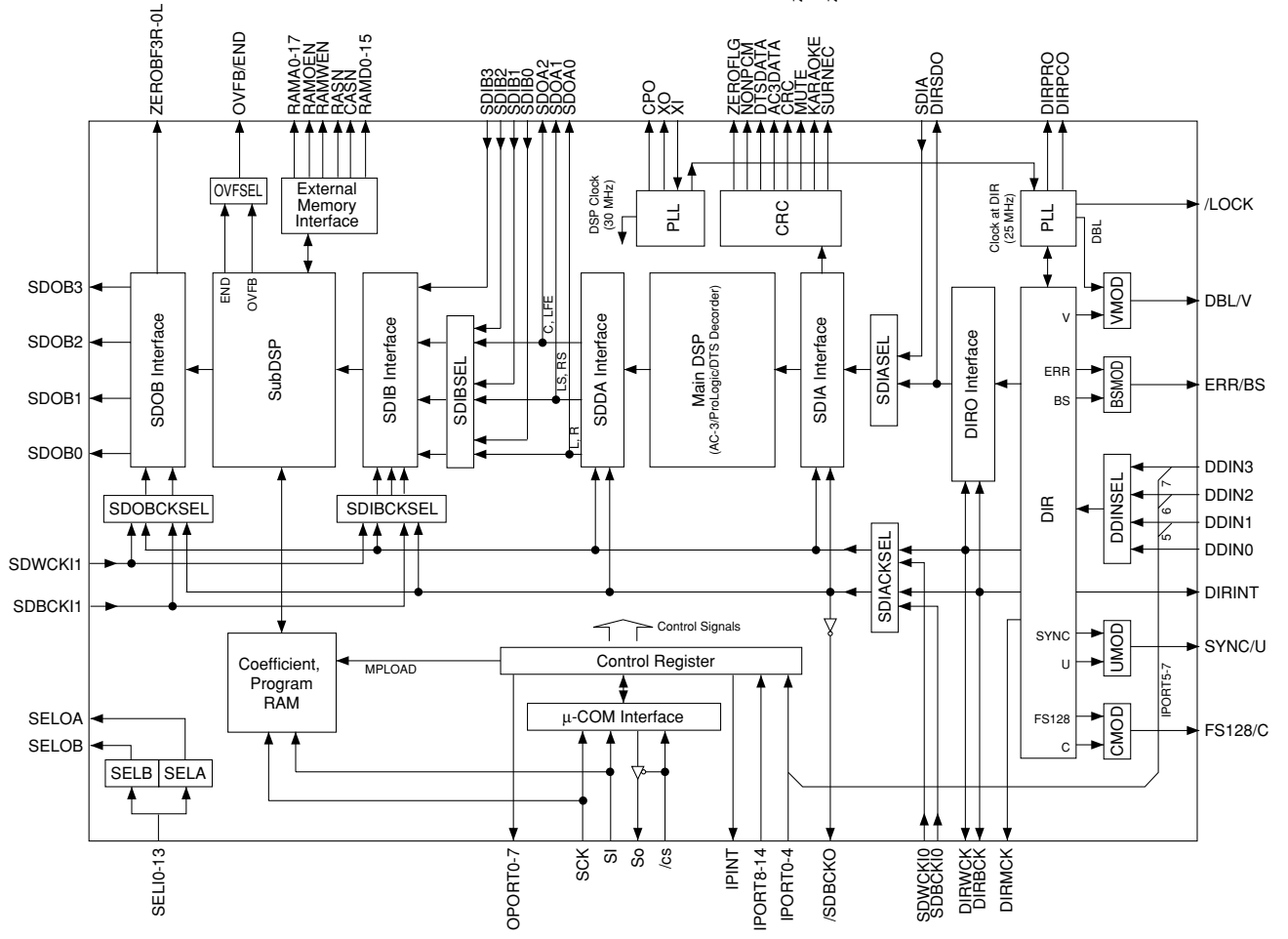

IC801 : YSS928
Pin Description

No.	Name	I/O	Function	
1	XO	O	Crystal oscillator connecting terminal	
2	XI	I	Crystal oscillator connecting terminal (24.576MHz)	
3	SELI1	I+	Built-in selector input 1	(AXD)
4	SELI0	I+	Built-in selector input 0	(GND)
5	SELOA	O+	Built-in selector output A	(ISEL)
6	SELOB	O+	Built-in selector output B	(RSEL)
7	TESTMS	I+	Test terminal (unconnected)	
8	TESTXEN	I+	Test terminal (unconnected)	
9	IPORT0	I+	General purpose input terminal	(CXDTA)
10	IPORT1	I+	General purpose input terminal (unconnected)	
11	IPORT2	I+	General purpose input terminal (unconnected)	
12	IPORT3	I+	General purpose input terminal (unconnected)	
13	IPORT4	I+	General purpose input terminal (unconnected)	
14	DDIN0	Is	DIR: Digital audio interface data input terminal 0	(ISEL)
15	DDIN1	Is	DIR: Digital audio interface data input terminal 1/General purpose input terminal	(Pull down)
16	DDIN2	Is	DIR: Digital audio interface data input terminal 2/General purpose input terminal	(GND)
17	DDIN3	Is	DIR: Digital audio interface data input terminal 3/General purpose input terminal	(Pull up)
18	VSS		Ground terminal	
19	CPO	A	PLL filter connecting terminal	
20	AVDD		+3.3V power terminal (for DIR)	
21	DIRPCO	A	DIR: PLL filter connecting terminal	
22	DIRPRO	A	DIR: PLL filter connecting terminal	
23	AVSS		Ground terminal (for DIR)	
24	TESTBRK	I+	Test terminal (unconnected)	
25	TESTR1	I+	PLL initialization signal input terminal for DSP	(/ICD)
26	TESTR2	I+	Test terminal (unconnected)	
27	VDD1		+3.3V power terminal (for terminal section)	
28	SDWCKI0	I+	Word clock input terminal for SDIA, SDOA, SDIB,SDOB interface (Unconnected)	
29	SDBCKI0	I+	Bit clock input terminal for SDIA, SDOA, SDIB, SDOB interface (Unconnected)	
30	/SDBCK0	O	DIRBCK or SDBCKI0 invert clock output terminal (Unconnected)	
31	IPORT8	I+	IPINT general purpose input terminal (Unconnected)	
32	IPORT9	I+	IPINT general purpose input terminal	(NONPCM)
33	IPORT10	I+	IPINT general purpose input terminal	(NONPCM)
34	IPORT11	I+	IPINT general purpose input terminal	(MUTE)
35	SDIA	I	AC-3/DTS bit stream (or PCM) data input terminal to Main DSP	(SDAD)
36	SDOA2	O	PCM output terminal from Main DSP (C/LFE output) (Unconnected)	
37	SDOA1	O	PCM output terminal from Main DSP (LS/RS output) (Unconnected)	
38	SDOA0	O	PCM output terminal from Main DSP (L/R output) (Unconnected)	
39	SDIB3	I+	PCM input terminal 3 to Sub DSP (Unconnected)	
40	SDIB2	I+	PCM input terminal 2 to Sub DSP (Unconnected)	
41	SDIB1	I+	PCM input terminal 1 to Sub DSP (Unconnected)	
42	SDIB0	I+	PCM input terminal 0 to Sub DSP (Unconnected)	
43	VSS		Ground terminal	
44	VDD2		+2.5V power terminal (for internal circuit)	
45	IPORT12	I+	IPINT general purpose input terminal	(DBL)
46	IPORT13	I+	IPINT general purpose input terminal	(DBL)
47	IPORT14	I+	IPINT general purpose input terminal	(DIRINT)
48	DIRSDO	O	AC-3/DTS bit stream (or PCM) data output terminal from DIR (Unconnected)	
49	DIRWCK	O	DIR: Serial data word clock (fs) output terminal	(WCK)
50	DIRBCK	O	DIR: Serial data bit clock (64fs) output terminal	(BCK)
51	DIRMCK	O	DIR: Serial data master clock (256fs or 128fs) output terminal	(MCK)
52	ERR/BS	O	DIR: Data error detect output/block start output terminal (Unconnected)	
53	SYNC/U	O	DIR: Serial data synchronous timing output/user data output terminal (Unconnected)	
54	FS128/C	O	DIR: Serial data master clock 128fs output/channel status output terminal (Unconnected)	
55	DBL/V	O	DIR: Double rate clock output/validity flag output terminal	(DBL)

No.	Name	I/O	Function	
56	SDWCKI1	I+	Word clock input terminal for SDIB, SDOB interface (Unconnected)	
57	SDBCKI1	I+	Bit clock input terminal for SDIB, SDOB interface (Unconnected)	
58	VSS		Ground terminal	
59	SDOB3	O	PCM output terminal from Sub DSP	
60	SDOB2	O	PCM output terminal from Sub DSP	
61	SDOB1	O	PCM output terminal from Sub DSP	
62	SDOB0	O	PCM output terminal from Sub DSP	
63	VDD1		+3.3V power terminal (for terminal section)	
64	ZEROBF3R	O+	SDOB3 Rch zero flag output terminal	(ZF3R)
65	ZEROBF3L	O+	SDOB3 Lch zero flag output terminal	(ZF3L)
66	ZEROBF2R	O+	SDOB2 Rch zero flag output terminal	(ZF2R)
67	ZEROBF2L	O+	SDOB2 Lch zero flag output terminal	(ZF2L)
68	OPORT0	O	General purpose output terminal (Unconnected)	
69	OPORT1	O	General purpose output terminal	(/RINH1)
70	OPORT2	O	General purpose output terminal (Unconnected)	
71	OPORT3	O	General purpose output terminal	(/ICCDC)
72	OPORT4	O	General purpose output terminal	(DFS)
73	OPORT5	O	General purpose output terminal	(DPL)
74	OPORT6	O	General purpose output terminal (Unconnected)	
75	OPORT7	O	General purpose output terminal (Unconnected)	
76	VSS		Ground terminal	
77	VDD2		+2.5V power terminal (for internal circuit)	
78	RAMD0	I+/O	Sub DSP: External memory data terminal 0	
79	RAMD1	I+/O	Sub DSP: External memory data terminal 1	
80	RAMD2	I+/O	Sub DSP: External memory data terminal 2	
81	RAMD3	I+/O	Sub DSP: External memory data terminal 3	
82	ZEROBF1R	O+	SDOB1 Rch zero flag output terminal	(ZF1R)
83	ZEROBF1L	O+	SDOB1 Lch zero flag output terminal	(ZF1L)
84	ZEROBF0R	O+	SDOB0 Rch zero flag output terminal	(ZF0R)
85	ZEROBF0L	O+	SDOB0 Lch zero flag output terminal	(ZF0L)
86	RAMD4	I+/O	Sub DSP: External memory data terminal 4	
87	RAMD5	I+/O	Sub DSP: External memory data terminal 5	
88	RAMD6	I+/O	Sub DSP: External memory data terminal 6	
89	RAMD7	I+/O	Sub DSP: External memory data terminal 7	
90	VSS		Ground terminal	
91	VDD1		+3.3V power terminal (for terminal section)	
92	RAMD8	I+/O	Sub DSP: External memory data terminal 8	
93	RAMD9	I+/O	Sub DSP: External memory data terminal 9	
94	RAMD10	I+/O	Sub DSP: External memory data terminal 10	
95	RAMD11	I+/O	Sub DSP: External memory data terminal 11	
96	RAMD12	I+/O	Sub DSP: External memory data terminal 12	
97	RAMD13	I+/O	Sub DSP: External memory data terminal 13	
98	RAMD14	I+/O	Sub DSP: External memory data terminal 14	
99	RAMD15	I+/O	Sub DSP: External memory data terminal 15	
100	CASN	O	Sub DSP: Column address strobe output terminal for external DRAM	
101	RAMWEN	O	Sub DSP: Write enable terminal for external memory	
102	RAMOEN	O	Sub DSP: Output enable terminal for external memory	
103	RASN	O	Sub DSP: Low address strobe output terminal for external DRAM	
104	VSS		Ground terminal	
105	VDD1		+3.3V power terminal (for terminal section)	
106	RAMA8	O	Sub DSP: External memory address terminal 8	
107	RAMA7	O	Sub DSP: External memory address terminal 7	
108	RAMA0	O	Sub DSP: External memory address terminal 0	
109	RAMA6	O	Sub DSP: External memory address terminal 6	
110	RAMA1	O	Sub DSP: External memory address terminal 1	

No.	Name	I/O	Function	
111	RAMA5	O	Sub DSP: External memory address terminal 5	
112	RAMA2	O	Sub DSP: External memory address terminal 2	
113	SELI13	I+	Built-in selector input 13 (Unconnected)	
114	SELI12	I+	Built-in selector input 12 (Unconnected)	
115	SELI11	I+	Built-in selector input 11 (Unconnected)	
116	SELI10	I+	Built-in selector input 10 (Unconnected)	
117	SELI9	I+	Built-in selector input 9 (Unconnected)	
118	RAMA4	O	Sub DSP: External memory address terminal 4	
119	RAMA3	O	Sub DSP: External memory address terminal 3	
120	RAMA9	O	Sub DSP: External memory address terminal 9 (Unconnected)	
121	RAMA10	O	Sub DSP: External memory address terminal 10 (Unconnected)	
122	RAMA11	O	Sub DSP: External memory address terminal 11 (Unconnected)	
123	VSS		Ground terminal	
124	VDD2		+2.5V power terminal (for internal circuit)	
125	SELI8	I+	Built-in selector input 8	(CXA)
126	SELI7	I+	Built-in selector input 7	(GND)
127	SELI6	I+	Built-in selector input 6 (Unconnected)	
128	SELI5	I+	Built-in selector input 5 (Unconnected)	
129	RAMA12	O	Sub DSP: External memory address terminal 12 (Unconnected)	
130	RAMA13	O	Sub DSP: External memory address terminal 13 (Unconnected)	
131	RAMA14	O	Sub DSP: External memory address terminal 14 (Unconnected)	
132	RAMA15	O	Sub DSP: External memory address terminal 15 (Unconnected)	
133	RAMA16	O	Sub DSP: External memory address terminal 16 (Unconnected)	
134	RAMA17	O	Sub DSP: External memory address terminal 17 (Unconnected)	
135	OVFB/END	O	Sub DSP: Overflow/program end detect terminal (Unconnected)	
136	ZEROFLG	O	Main DSP: Zero flag output terminal (Unconnected)	
137	VSS		Ground terminal	
138	NONPCM	O	Main DSP: Non-PCM data detect terminal	
139	DTSDATA	O	Main DSP: DTS data detect terminal (Unconnected)	
140	AC3DATA	O	Main DSP: AC3 data detect terminal (Unconnected)	
141	MUTE	O	Main DSP: Auto mute detect terminal	
142	KARAOKE	O	Main DSP: AC3 KARAOKE data detect terminal (Unconnected)	
143	VDD1	+3.3V	power terminal (for terminal section)	
144	SURENC	O	Main DSP: AC-3 2/0 mode Dolby surround encode input detect terminal (Unconnected)	
145	CRC	O	Main DSP: AC3 CRC error detect terminal (Unconnected)	
146	/LOCK	O	DIR: PLL lock detect terminal (Unconnected)	
147	DIRINT	O	DIR: Interrupt output terminal	
148	/CS	Is	Microprocessor interface chip select input terminal	(CSY)
149	SO	Ot	Microprocessor interface data output terminal	
150	SI	Is	Microprocessor interface data input terminal	(SDM)
151	SCK	Is	Microprocessor interface clock input terminal	(YSSCK)
152	/IC	Is	Initial clear input terminal	(/ICD)
153	IPINT	O+	Interrupt output terminal by IPORT 8-14	
154	SELI4	I+	Built-in selector input 4	(OPTD)
155	VSS		Ground terminal	
156	SELI3	I+	Built-in selector input 3	(OPTC)
157	SELI2	I+	Built-in selector input 2	(OPTB)
158	TESTXI	I	Test terminal (should be always connected to VSS)	
159	TESTXO	O	Test terminal (Unconnected)	
160	VDD2	+2.5V	power terminal (for internal circuit)	

Is: Schmidt trigger input terminal
I+: Input terminal with pull-up resistor
O: Digital output terminal
Ot: 3-state digital output terminal
A: Analog terminal

IC902 : μPD78F4218AGF-3BA
16bit μ-COM (Main CPU)

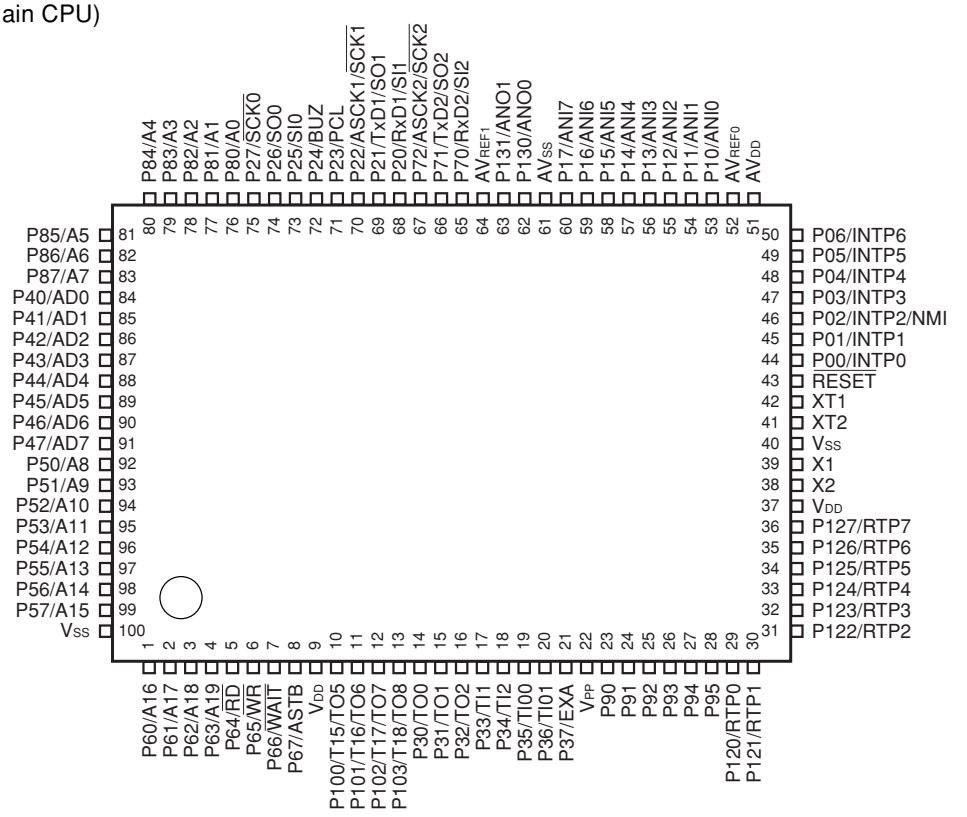

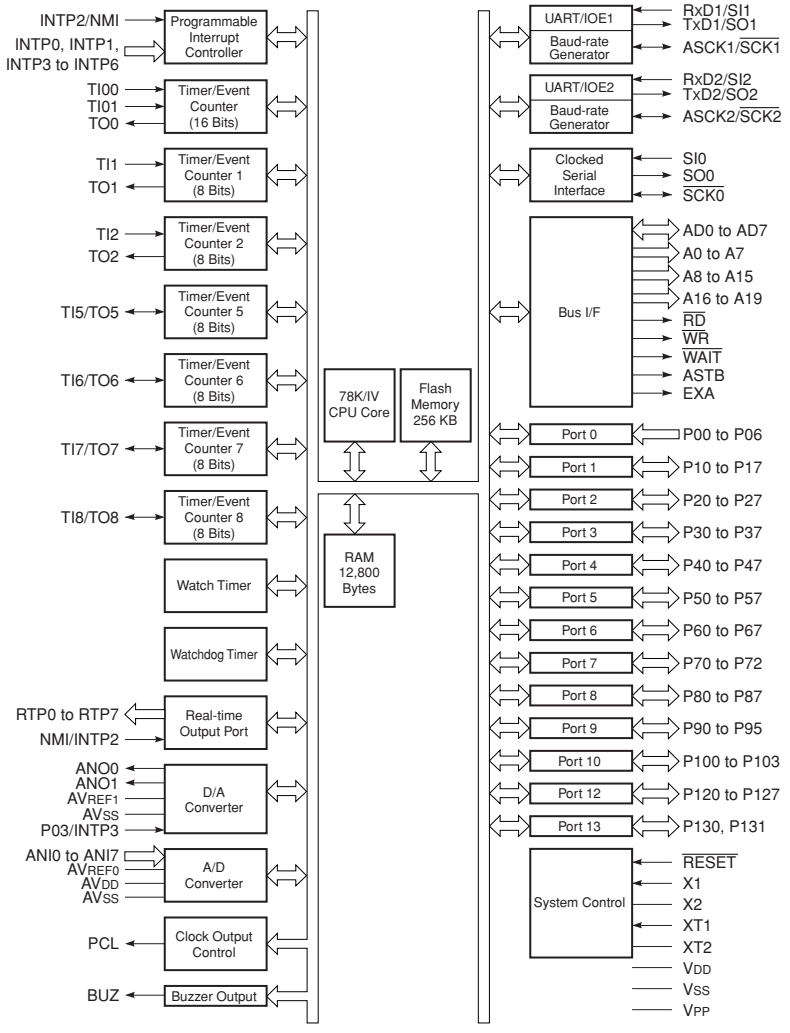

IC902 : µPD78F4218AGF-3BA
Pin Description

No.	PORT	Function name	I/O	Detail of function
1	P60/A16			NC
2	P61/A17			NC
3	P62/A18			NC
4	P63/A19	/6chG	O	6ch Gain
5	P64/$\overline{RD}$	VIDEO1	O	Video select 1
6	P65/$\overline{WR}$	VIDEO2	O	Video select 2
7	P66/$\overline{WAIT}$	VIDEO3	O	Video select 3
8	P67/ASTB	CECOD	O	Serial CE out for CODEC
9	VDD	+5BU		
10	P100/TI5/TO5		I	NC
11	P101/TI6/TO6		I	NC
12	P102/TI7/TO7	/DMT	O	Digital mute
13	P103/TI8/TO8	PRY	O	Power relay
14	P30/TO0	MRY	O	Main speaker & HP relay
15	P31/TO1	ERY	O	Effect speaker relay
16	P32/TO2	RIMA	O	Power limiter control A
17	P33/TI1	RIMB	O	Power limiter control B
18	P34/TI2	/MLV	O	Main level control
19	P35/TI00		O	NC
20	P36/TI01		O	NC
21	P37/EXA	/HP	I	Headphone detect
22	TEST/Vpp	VPP		Control of flash write
23	P90		O	NC
24	P91		O	NC
25	P92		O	NC
26	P93		O	NC
27	P94		O	NC
28	P95		O	NC
29	P120/RTP0	/PSM	I	Power save mode
30	P121/RTP1		O	NC
31	P122/RTP2		O	NC
32	P123/RTP3		O	NC
33	P124/RTP4		I	NC
34	P125/RTP5		I	NC
35	P126/RTP6	MVDN	O	Main volume down
36	P127/RTP7	MVUP	O	Main volume up
37	VDD	+5BU		
38	X2	X2		
39	X1	X1		
40	Vss	MG		
41	XT2	XT2		
42	XT1	XT1		
43	$\overline{RESET}$	/RES		
44	P00/INTP0	INT928	I	YSS928 IPINT/MUTE/DIR
45	P01/INTP1	/PDET	I	Power down detect interrupt
46	P02/INTP2	PSW	I	Standby SW input (High edge)
47	P03/INTP3	REM1	I	Remote controller signal
48	P04/INTP4		I	NC
49	P05/INTP5		O	NC
50	P06/INTP6		O	NC

No.	PORT	Function name	I/O	Detail of function
100	Vss	MG		
99	P57/A15	CEL	O	Serial CE for sanyo device
98	P56/A14		O	
97	P55/A13	SCK	O	Serial data clock for audio IC
96	P54/A12	SO	O	Serial data for audio IC
95	P53/A11		O	NC
94	P52/A10		O	NC
93	P51/A9		O	NC
92	P50/A8		O	NC
91	P47/AD7	/FMT	O	Full mute
90	P46/AD6	/MTSW	O	LFE mute
89	P45/AD5	/MTC	O	Center mute
88	P44/AD4	/MTMR	O	Main, rear mute
87	P43/AD3	/TMT	O	Tuner mute
86	P42/AD2	DEST	I	Frequency switch (R destination)
85	P41/AD1	RDSE	I/O	RDS use detect/RDS Enable out
84	P40/AD0	TUN1	I	Tuner destination 1
83	P87/A7	TUN0	I	Tuner destination 0
82	P86/A6	/ST	I	Tuner/ST (stereo)
81	P85/A5	TUNED	I	Tuned
80	P84/A4	SCKR	O	RDS data clock
79	P83/A3	SDTR	O	RDS data
78	P82/A2	SDRR	I	RDS data receive
77	P81/A1	/ICD	O	YSS928/DA/AD/CODEC/DEM
76	P80/A0	CSY	O	YSS928 CE
75	P27/$\overline{SCK0}$	/SCK0	O	FL Driver Clock/Flash Clock
74	P26/SO0	SDF	O	FL Driver TxD/Flash RxD
73	P25/SI0	CEFD	O	FL Driver CE/Flash TxD
72	P24/BUZ	VPP2	O	Control of flash write
71	P23/PCL	CEP	O	PLL IC Enable
70	P22/ASCK1/$\overline{SCK1}$	SCKP	O	PLL data clock
69	P21/TXD1/SO1	SDTP	O	PLL data
68	P20/RXD1/SI1	SDRP	I	PLL data receive
67	P72/ASCK2/$\overline{SCK2}$	YSSCK	O	YSS928 data clock
66	P71/TXD2/SO2	SDM	O	YSS928 data
65	P70/RXD2/SI2	SDD	I	YSS928 data receive
64	AVref1	AVref		
63	P131/ANO1	/BLK	O	FL Driver all lights out
62	P130/ANO0		O	NC
61	AVss	AVss		
60	P17/ANI7	PRV	I	PS protection detect
59	P16/ANI6	PRD	I	DC protection detect
58	P15/ANI5	PRI	I	I protection detect
57	P14/ANI4	ADKEY0	I	Body key detection 0
56	P13/ANI3	ADKEY1	I	Body key detection 1
55	P12/ANI2	ADKEY2	I	Body key detection 2
54	P11/ANI1	MODEL	I	Model select
53	P10/ANI0	PREMT	I	Power limiter detection
52	AVref0	AVref0		
51	AVdd	AVdd		

■ BLOCK DIAGRAM (1/2)

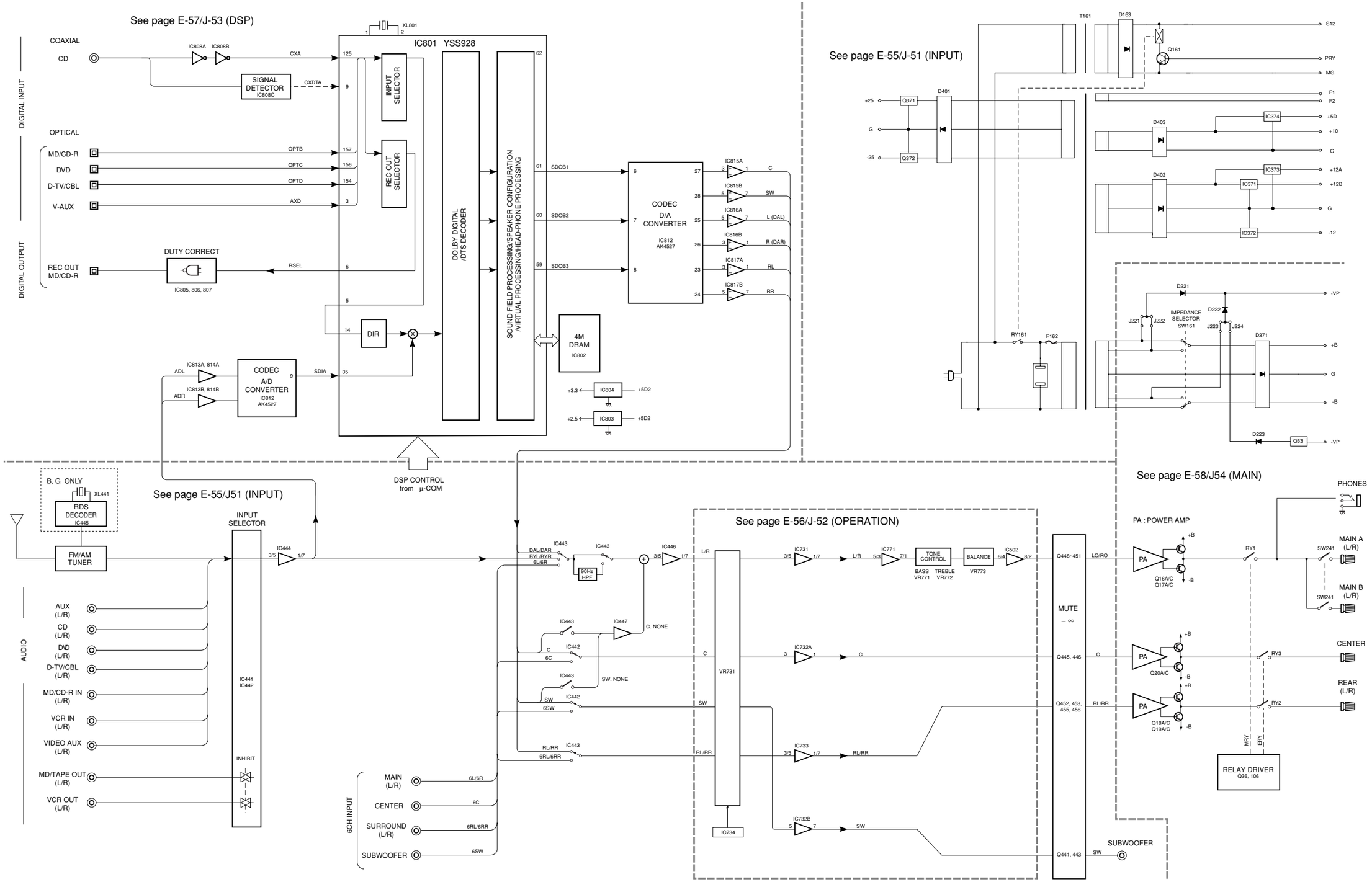

■ BLOCK DIAGRAM (2/2)

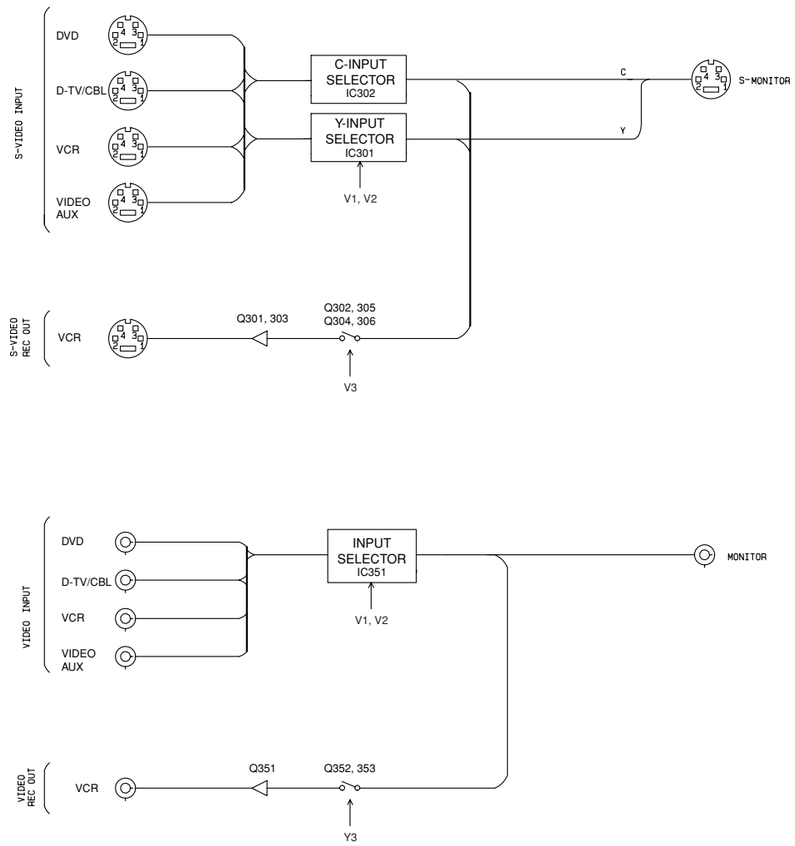

See page E-55/J-51 (INPUT)

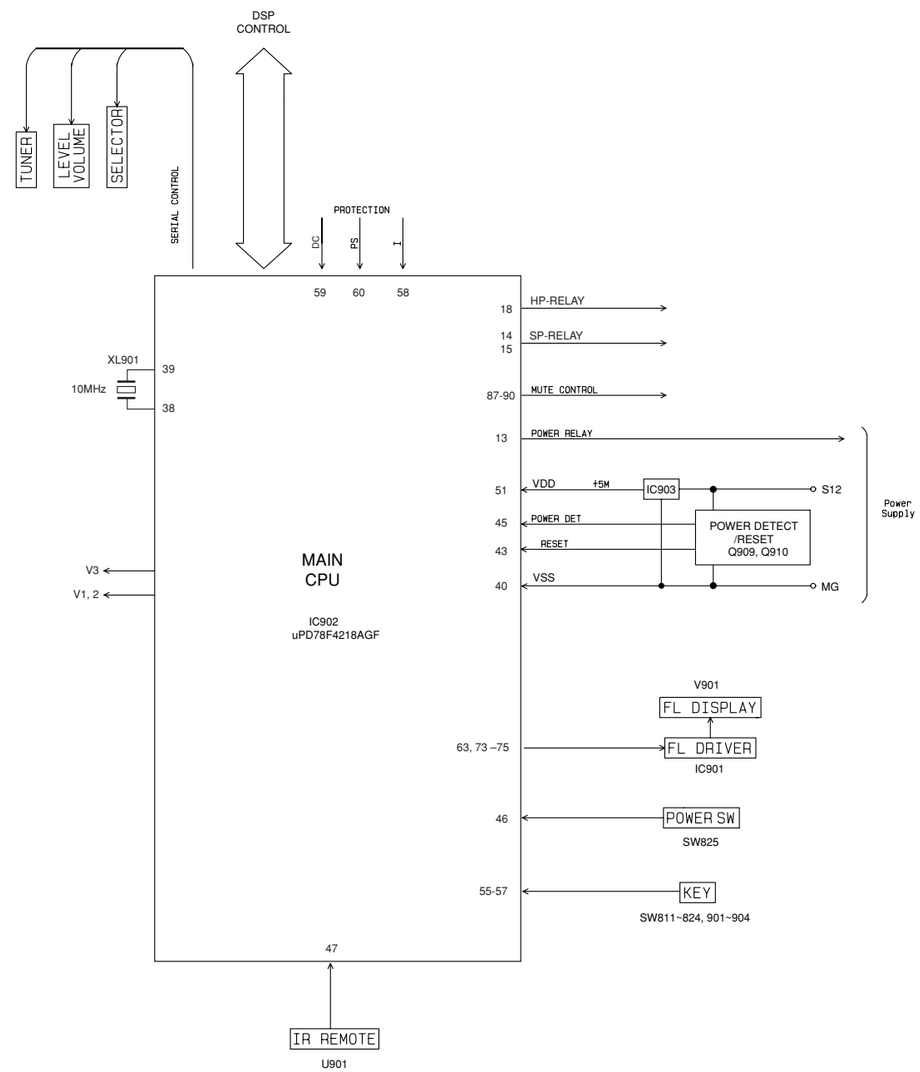

See page E-56/J-52 (OPERATION)

■ PRINTED CIRCUIT BOARD (Foil side)

INPUT (1) P. C. B.

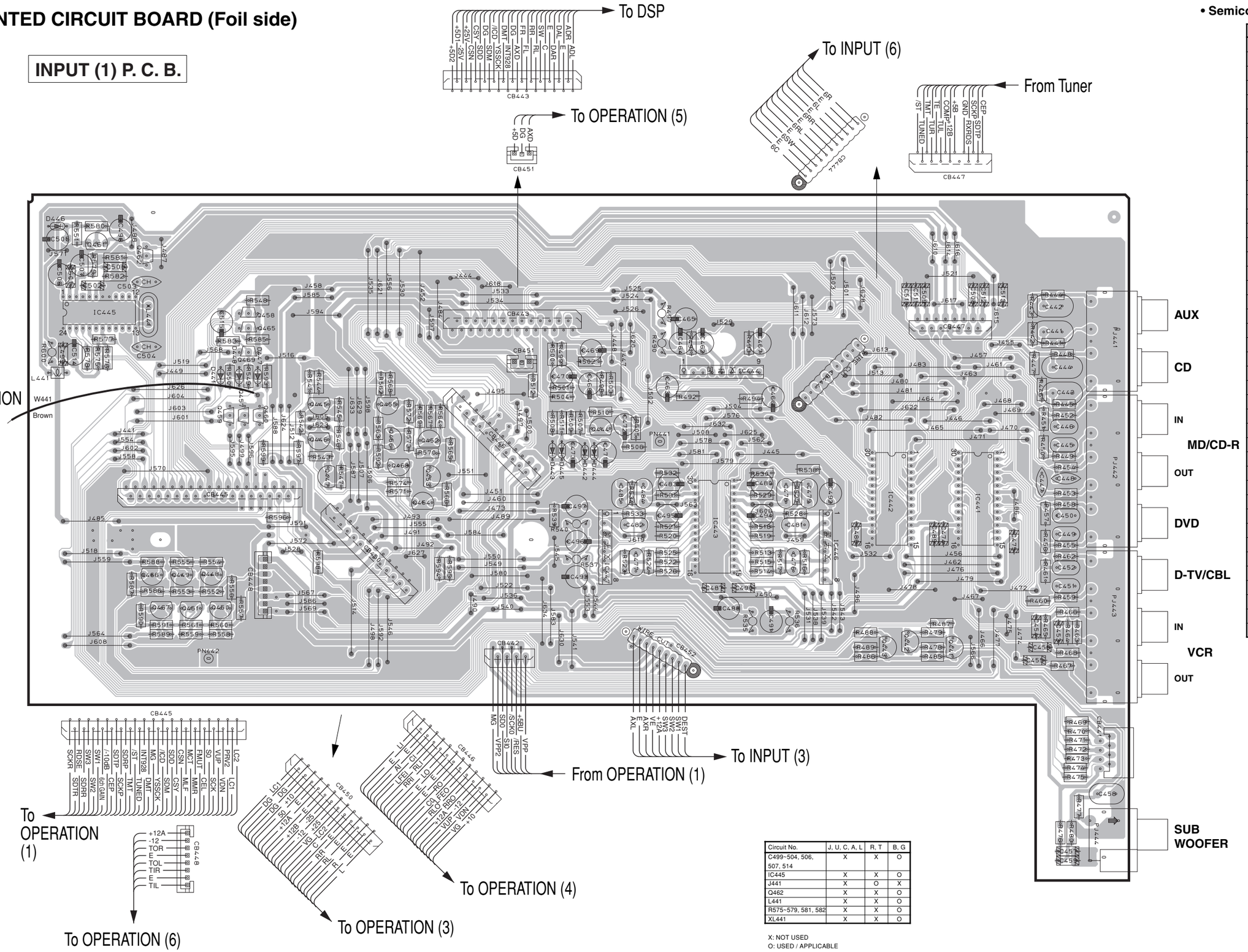

• **Semiconductor Location**

Ref. No.	Location
D441	C3
D442	E4
D443	E4
D444	E4
D445	E4
D446	A2
D447	C3
D448	C3
IC441	H4
IC442	G4
IC443	F4
IC444	F3
IC445	B3
IC446	G4
IC447	E5
Q441	G5
Q442	G5
Q443	G5
Q444	E4
Q445	C4
Q446	C4
Q447	C4
Q448	C5
Q449	B5
Q450	C5
Q451	B5
Q452	D4
Q453	D4
Q454	D4
Q455	D4
Q456	D4
Q457	C4
Q458	C3
Q459	C4
Q460	C4
Q461	B2
Q462	B3
Q465	C3
Q466	B5
Q467	B5
Q468	D4
Q469	C3

Circuit No.	J, U, C, A, L	R, T	B, G
C499~504, 506, 507, 514	X	X	O
IC445	X	X	O
J441	X	O	X
Q462	X	X	O
L441	X	X	O
R575~579, 581, 582	X	X	O
XL441	X	X	O

X: NOT USED
O: USED / APPLICABLE

■ PRINTED CIRCUIT BOARD (Foil side)

INPUT (2) P. C. B.

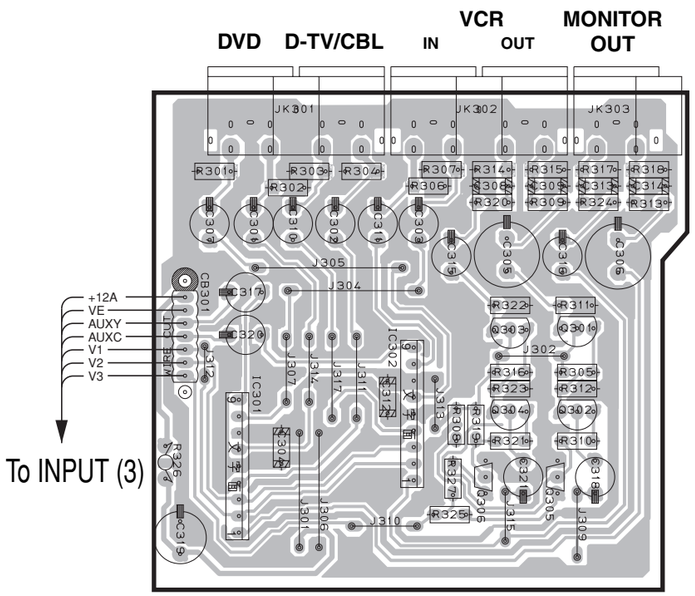

INPUT (3) P. C. B.

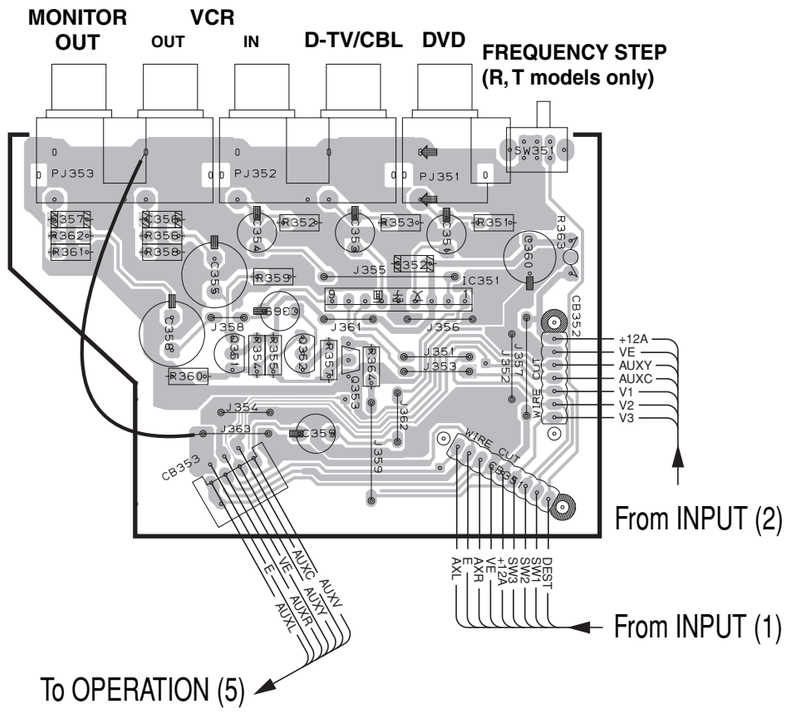

INPUT (6) P. C. B.

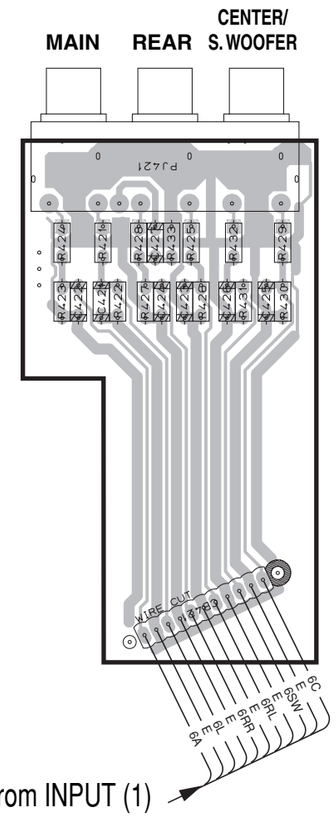

INPUT (4) P. C. B.

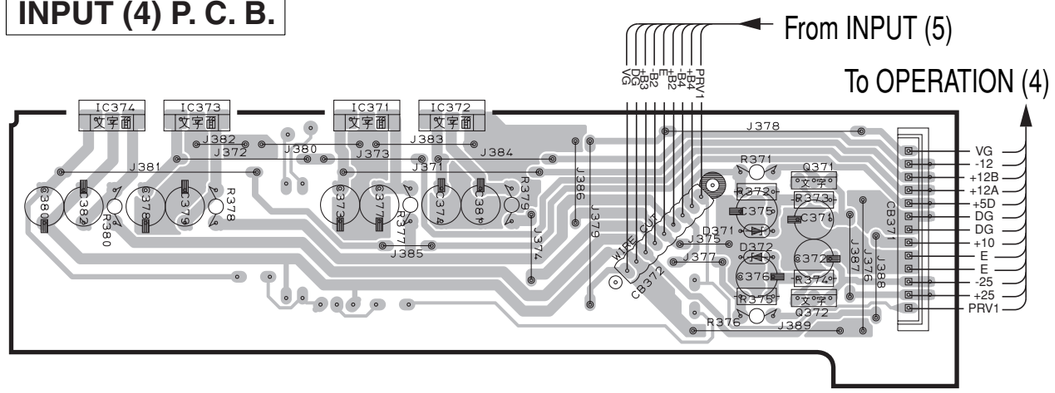

INPUT (5) P. C. B.

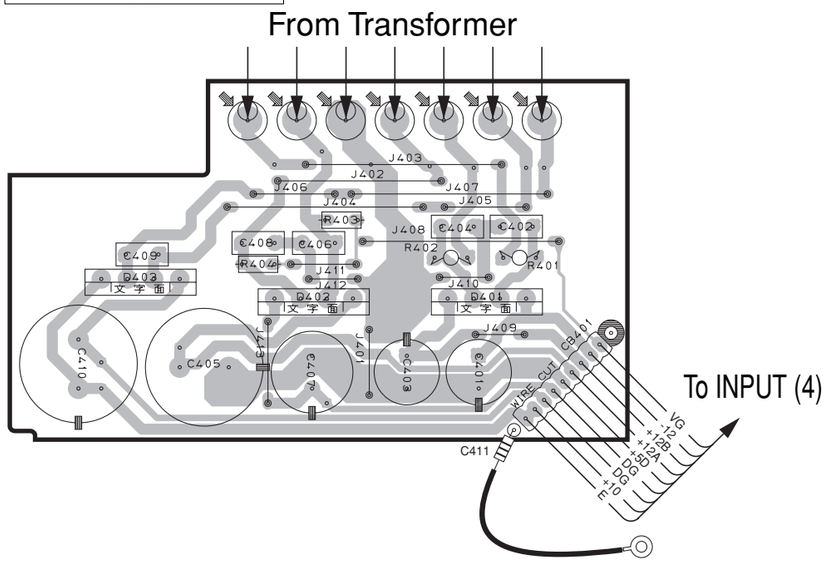

• Semiconductor Location

Ref. No.	Location
D371	D6
D372	D6
D401	G6
D402	G6
D403	F6
IC301	B3
IC302	B3
IC351	E3
IC371	B5
IC372	C5
IC373	B5
IC374	A5
Q301	C3
Q302	C3
Q303	C3
Q304	C3
Q305	C3
Q306	C3
Q351	E3
Q352	E3
Q353	E3
Q371	D5
Q372	D6

■ PRINTED CIRCUIT BOARD (Foil side)

Circuit No.	J	U, C	R, T	A, L	B, G
J901	X	X	X	O	O
J902	X	X	O	X	X
J903	O	X	X	O	O
J904	O	O	X	X	X
J1005	X	X	O	O	O
R908	X	O	O	X	X
R909	X	X	O	O	O
R916, 919, 920	X	X	X	X	O
R935	X	X	O	X	X
R936	O	O	O	O	X
R937	X	X	X	X	O
SW901~904	X	X	X	X	O

X: NOT USED
O: USED / APPLICABLE

• Semiconductor Location

Ref. No.	Location
D901	B3
D902	C4
D903	D4
D904	D4
D905	D4
D906	D4
D907	B3
D908	B3
D909	B4
D910	B3
D911	B3
D912	B3
IC901	E4
IC902	C3
IC903	B3
Q901	F4
Q902	F4
Q903	E4
Q904	D4
Q906	D4
Q907	D3
Q909	B3
Q910	B3
Q911	G3
Q912	F3

OPERATION (1) P. C. B.

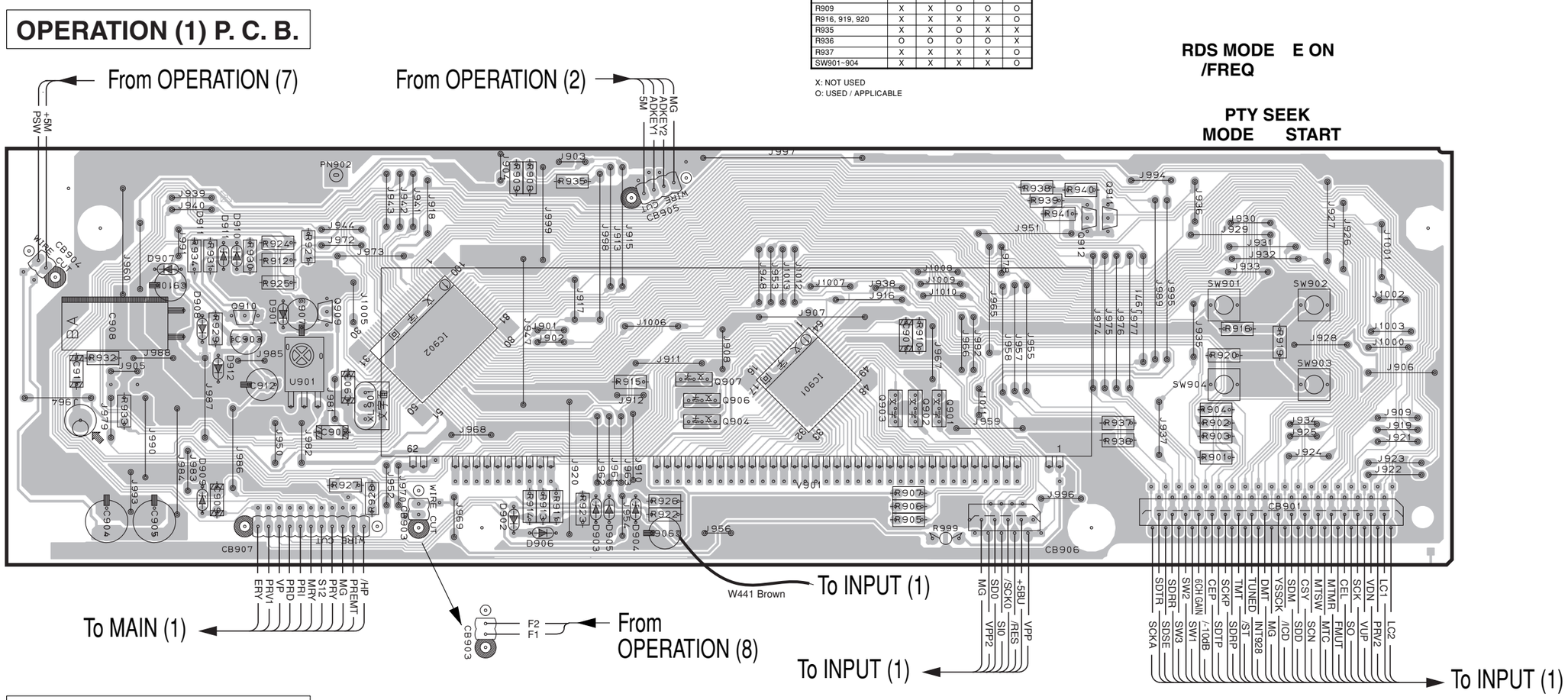

OPERATION (2) P. C. B.

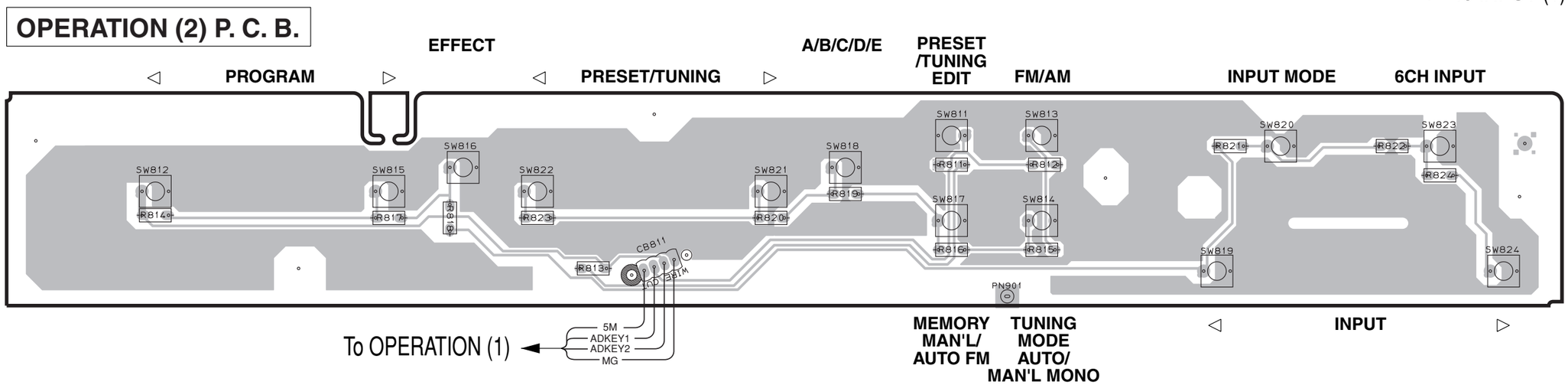

■ PRINTED CIRCUIT BOARD (Foil side)

OPERATION (3) P. C. B.

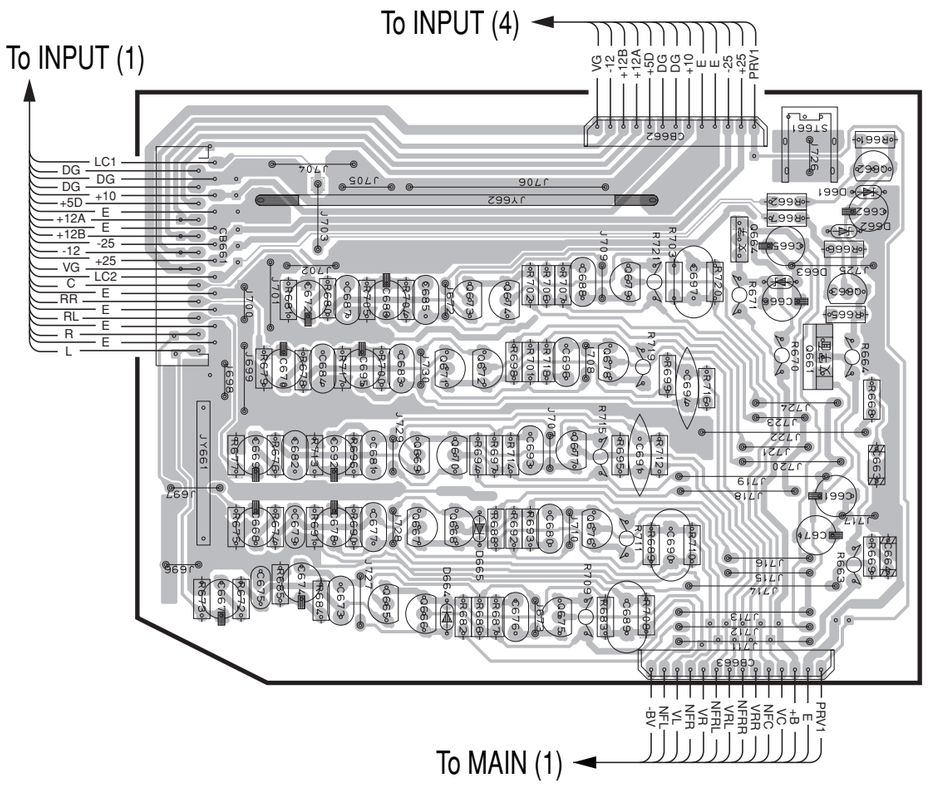

• **Semiconductor Location**

Ref. No.	Location	Ref. No.	Location	Ref. No.	Location	Ref. No.	Location	Ref. No.	Location
D661	D2	IC732	F3	Q663	D3	Q670	C3	Q677	C3
D662	D2	IC733	E3	Q664	D2	Q671	C3	Q678	C3
D663	D3	IC734	E5	Q665	B4	Q672	C3	Q679	C3
D664	C4	IC771	H3	Q666	B4	Q673	C3		
D665	C4	IC772	I3	Q667	B4	Q674	C3		
D731	E4	Q661	D3	Q668	C4	Q675	C4		
IC731	F3	Q662	D2	Q669	B3	Q676	C4		

OPERATION (4) P. C. B.

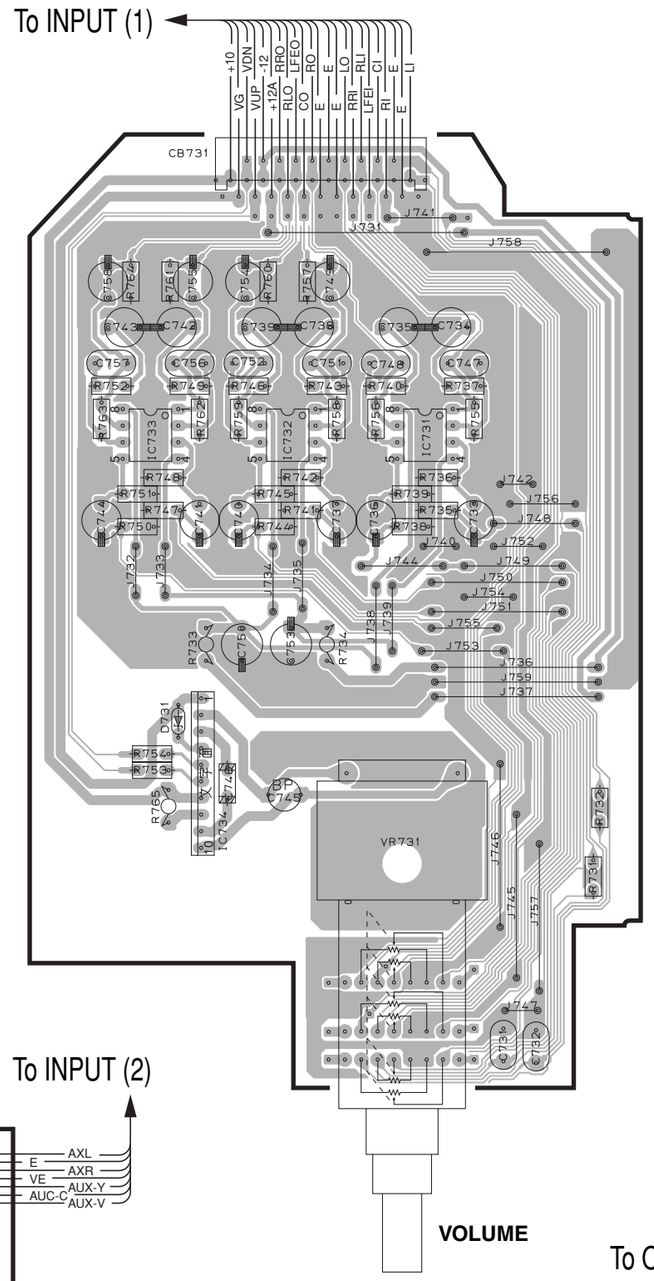

Circuit No.	J	U, C	R, T	A, L	B, G
C835, 839, 840	X	X	O	O	O
D661	X	O	O	O	O
Q662	X	O	O	O	O
R661, 662	X	O	O	O	O
R839	X	X	O	O	O

X: NOT USED
O: USED / APPLICABLE

OPERATION (6) P. C. B.

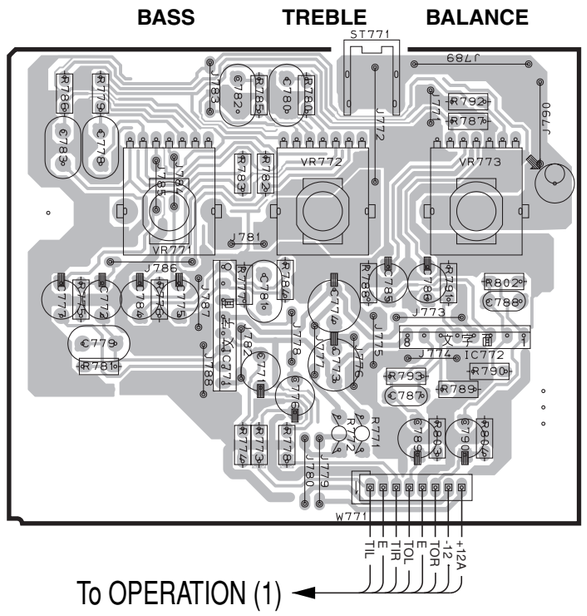

OPERATION (7) P. C. B.

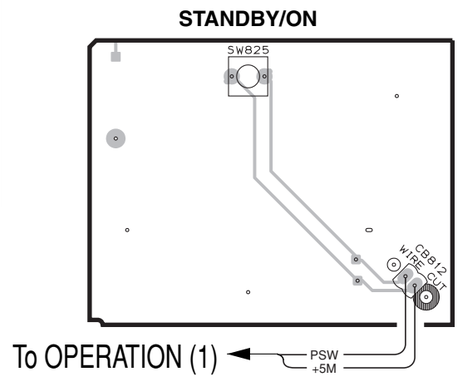

OPERATION (8) P. C. B.

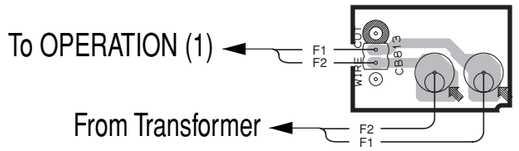

OPERATION (5) P. C. B.

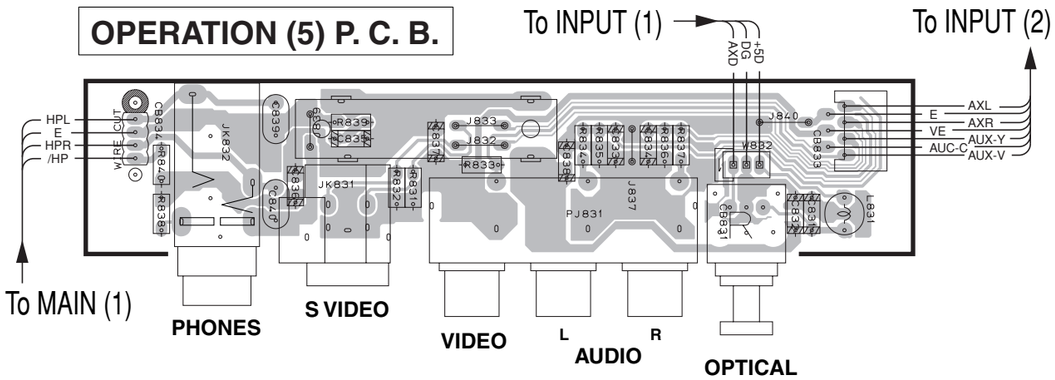

■ PRINTED CIRCUIT BOARD (Foil side)

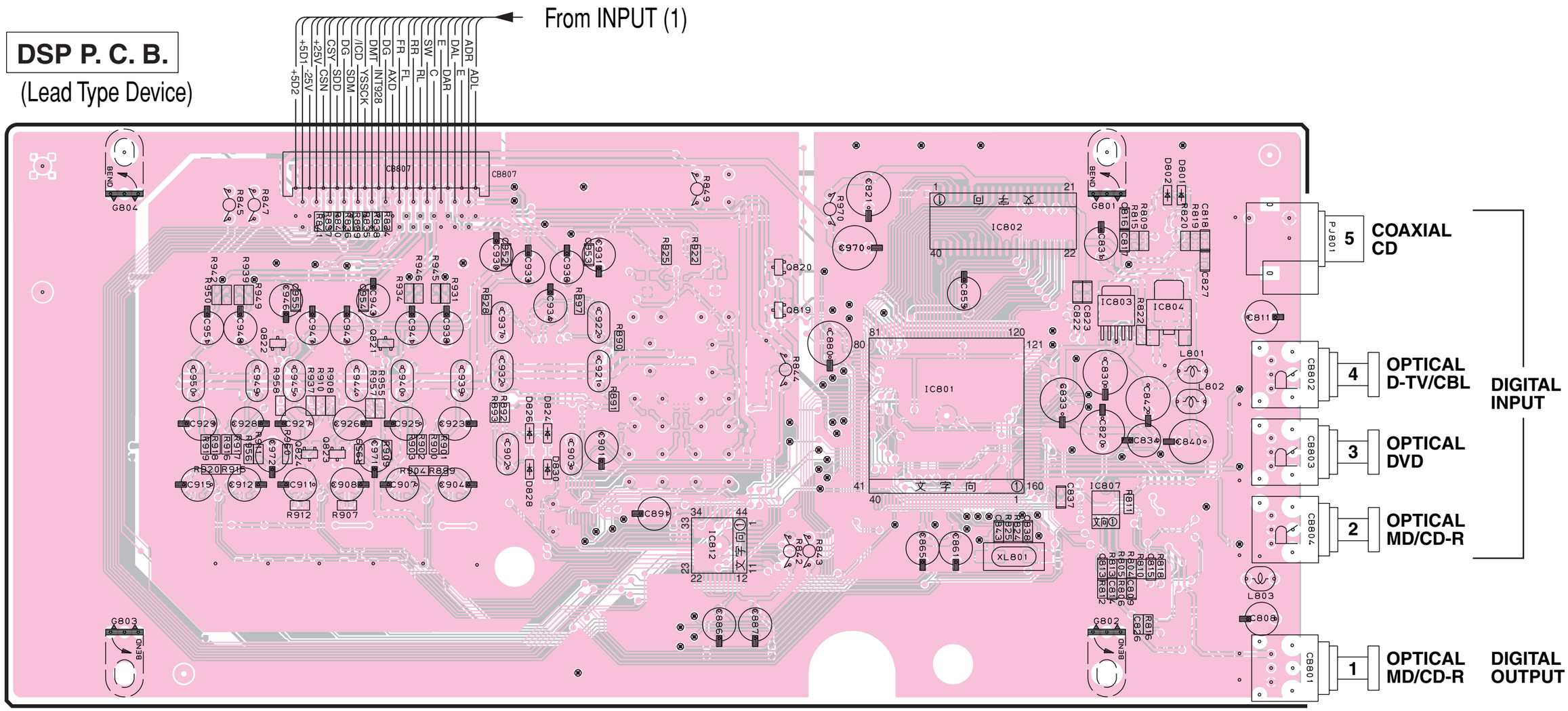

• **Semiconductor Location**

Ref. No.	Location	Ref. No.	Location	Ref. No.	Location
D801	H2	IC802	G3	Q821	C3
D802	H2	IC803	G3	Q822	B3
D824	D4	IC804	H3	Q823	C4
D826	D4	IC807	G4	Q824	C4
D828	D4	IC812	E4		
D830	D4	Q819	E3		
IC801	F4	Q820	E3		

■ PRINTED CIRCUIT BOARD (Foil side)

DSP P. C. B. (Surface Mount Device)

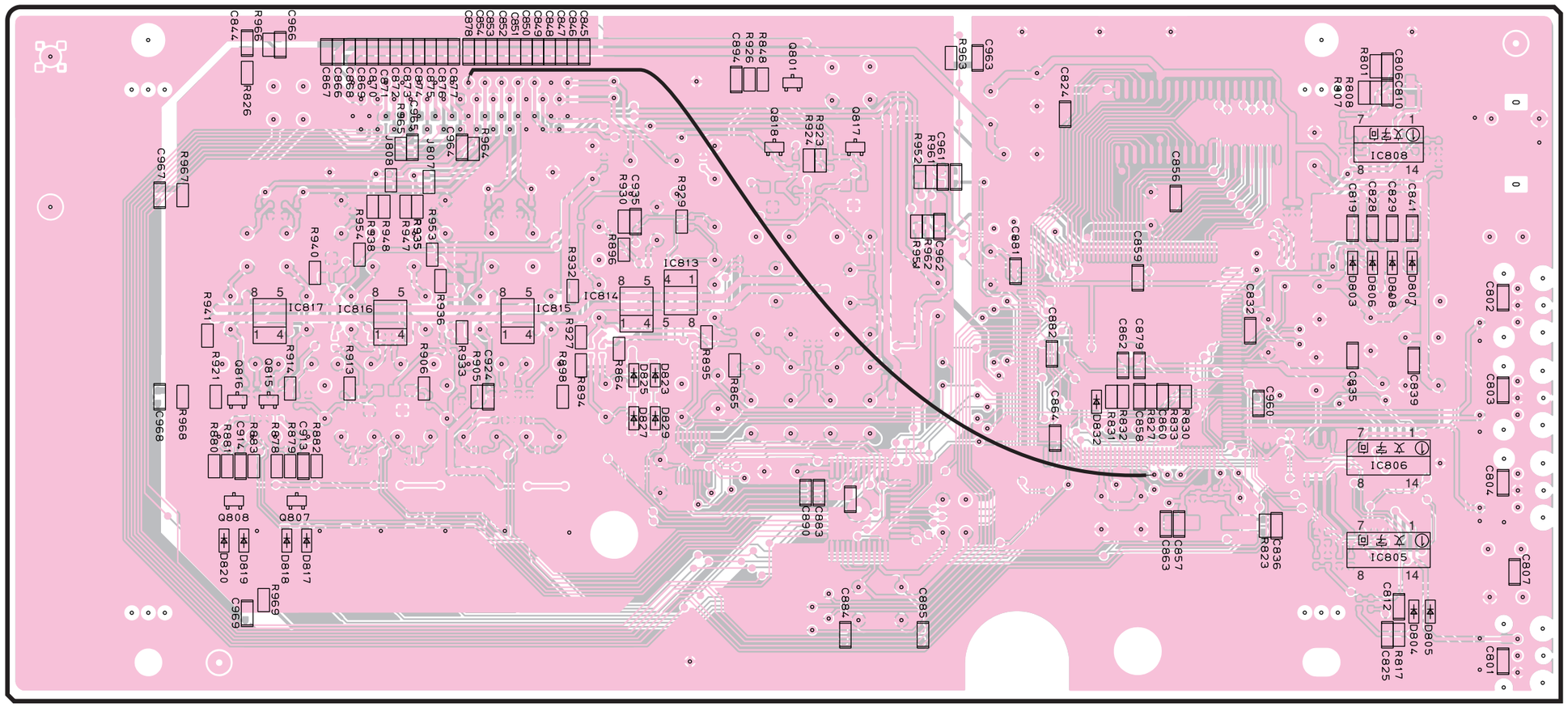

• **Semiconductor Location**

Ref. No.	Location	Ref. No.	Location	Ref. No.	Location	Ref. No.	Location
D803	G3	D818	B6	D832	F4	IC816	C3
D804	H5	D819	B6	IC805	H5	IC817	B3
D805	H5	D820	B6	IC806	H4	Q801	E2
D806	G3	D823	D4	IC808	H3	Q807	B4
D807	H3	D825	D4	IC813	D3	Q808	B4
D808	H3	D827	D4	IC814	D3	Q817	E3
D817	B6	D829	D4	IC815	C3	Q818	E3

■ PRINTED CIRCUIT BOARD (Foil side)

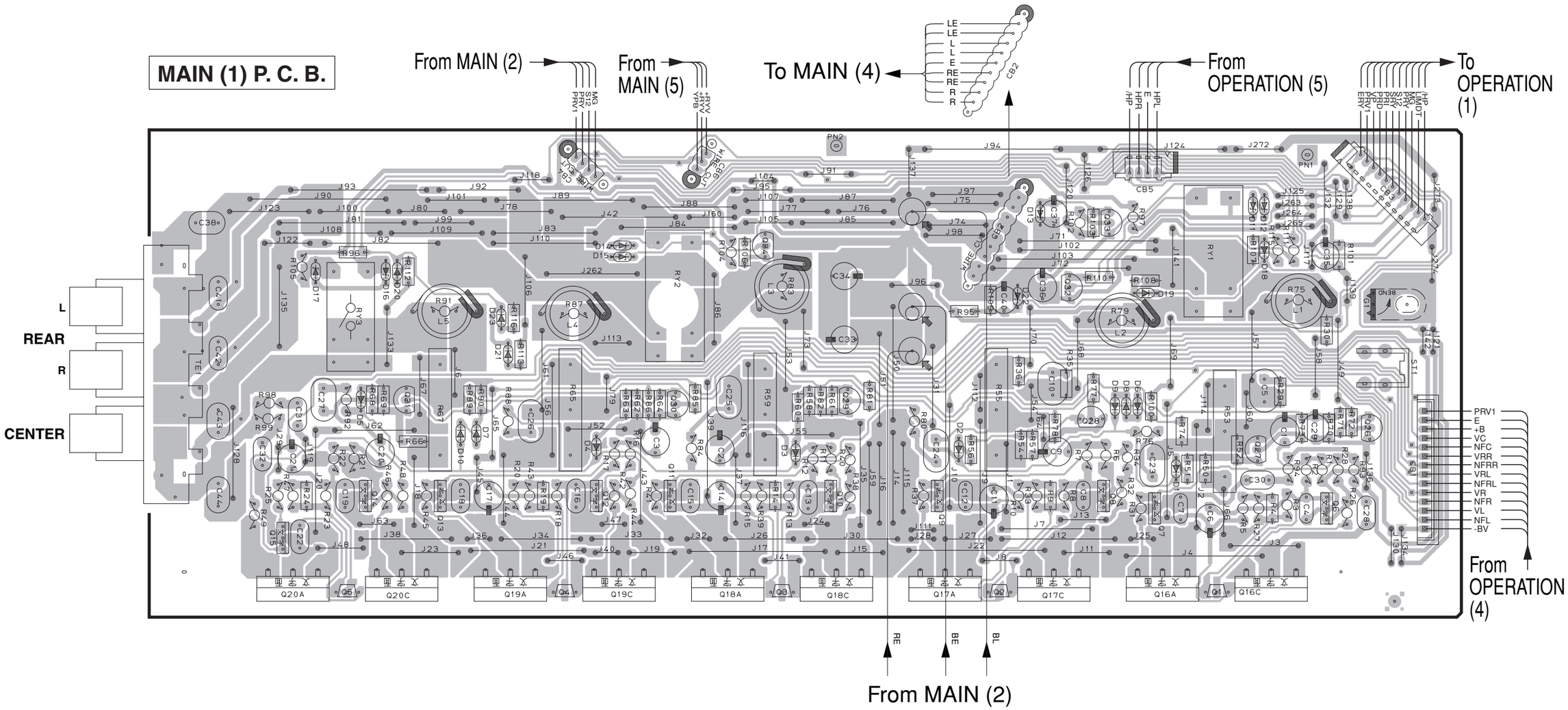

• **Semiconductor Location**

Ref. No.	Location	Ref. No.	Location	Ref. No.	Location	Ref. No.	Location	Ref. No.	Location	Ref. No.	Location
D1	H4	D11	H2	D21	D3	Q8	G4	Q17A	F5	Q28	G4
D2	F4	D12	H2	D22	G3	Q9	F4	Q17C	G5	Q29	F4
D3	E3	D13	G2	D23	D3	Q10	F4	Q18A	E5	Q30	E4
D4	D4	D14	D3	Q1	H5	Q11	E4	Q18C	F5	Q31	C3
D5	C4	D15	D3	Q2	G5	Q12	E4	Q19A	D5	Q32	G3
D6	G4	D16	C3	Q3	E5	Q13	C4	Q19C	D5	Q33	G2
D7	D4	D17	C3	Q4	D5	Q14	C4	Q20A	B5	Q34	E3
D8	G4	D18	H3	Q5	C5	Q15	B4	Q20C	C5		
D9	G4	D19	G3	Q6	H4	Q16A	H5	Q26	I4		
D10	C4	D20	C3	Q7	H4	Q16C	H5	Q27	H4		

Circuit No.	J	U, C	R, T	A, B, G, L
C38, 41~44	X	X	X	O

X: NOT USED
O: USED / APPLICABLE

■ PRINTED CIRCUIT BOARD (Foil side)

MAIN (2) P. C. B.

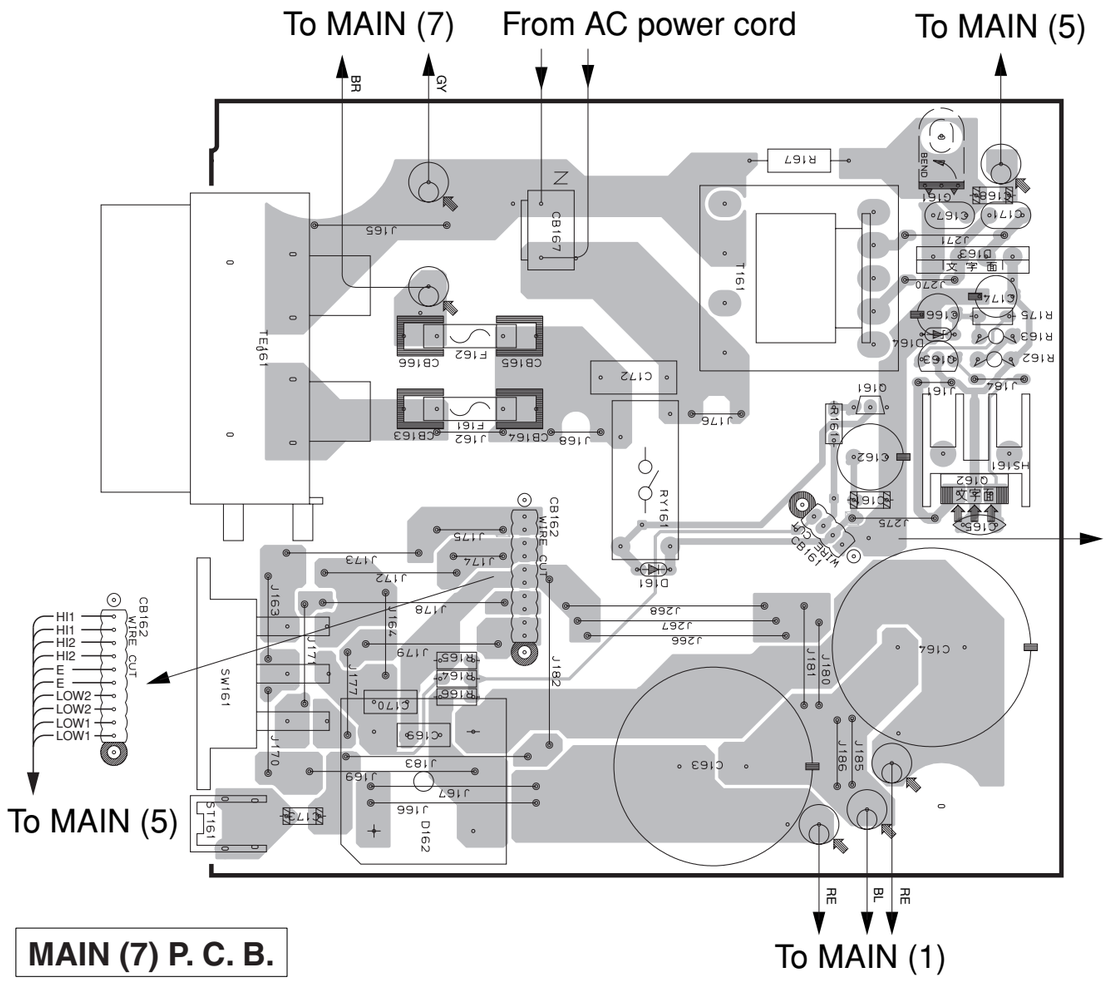

VOLTAGE SELECTOR

240V	1-2/5-6
220V	2-3/6-7
110V	3-4/7-8
120V	4-5/8-1

MAIN (3) P. C. B.

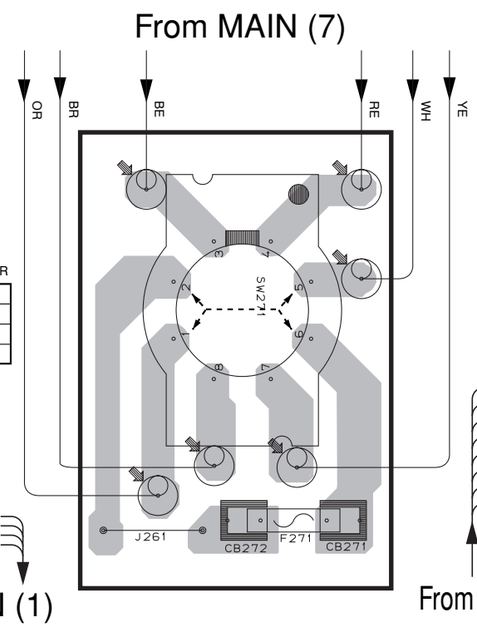

MAIN (4) P. C. B.

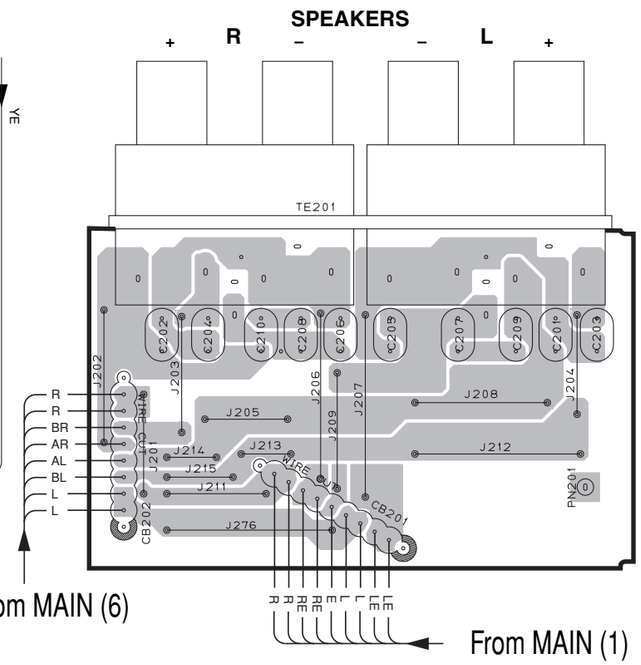

MAIN (6) P. C. B.

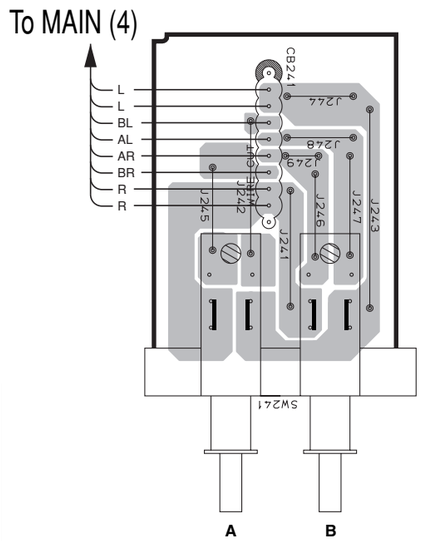

MAIN (5) P. C. B.

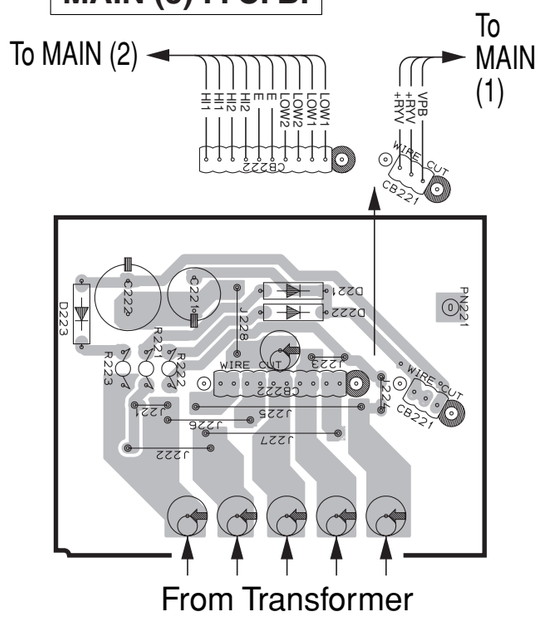

MAIN (7) P. C. B.

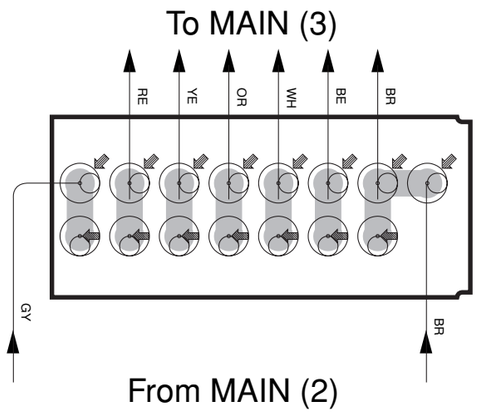

• **Semiconductor Location**

Ref. No.	Location	Ref. No.	Location
D161	C4	Q161	D3
D162	B5	Q162	E3
D163	E3	Q163	D3
D164	D3		
D221	I5		
D222	I6		
D223	H6		

Circuit No.	J	U, C	R, T	A, B, L	G
C165, 166, 174	X	X	O	X	X
C201~210	X	X	X	O	O
CB163, 164	X	O	X	X	O
CB271, 272	X	X	O	X	X
D164	X	X	O	X	X
F161	X	O	X	X	O
F271	X	X	O	X	X
J161	O	O	X	O	O
J162	O	O	O	O	X
J163, 164, 221, 224	O	X	X	X	X
J178, 179, 222, 223	X	O	O	O	O
Q162, 163	X	X	O	X	X
R162, 163, 175	X	X	O	X	X
R167	X	O	X	X	X
SW161	X	O	O	O	O
SW271	X	X	O	X	X
W261~266	X	X	O	X	X

X: NOT USED
O: USED / APPLICABLE

■ IC BLOCK DIAGRAM

IC301, 302, 351: LA7956
Video Switch

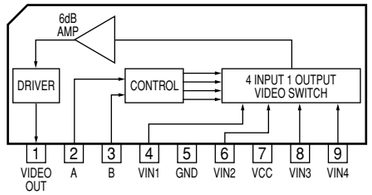

IC371, 373: NJM7812FA
IC374: NJM7805FA
Voltage Regulator

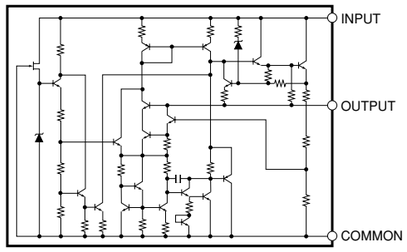

IC372: NJM79M12FA
Voltage Regulator

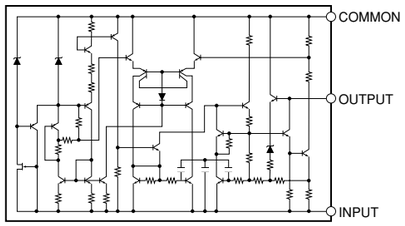

IC441: LC78211
Analog Function Switch

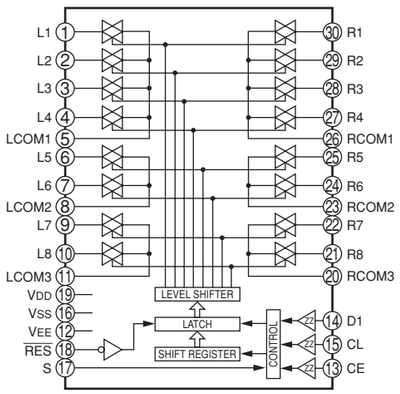

IC442: LC78213
Analog Function Switch

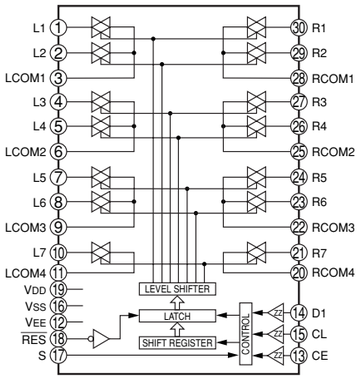

IC443: LC78212
Analog Function Switch

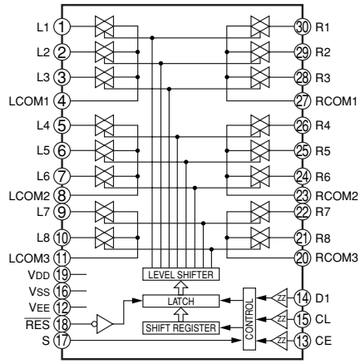

IC444: μPC4570HA
Dual OP-Amp

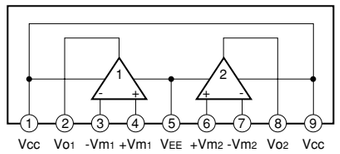

IC445: LC72722
RDS Decoder

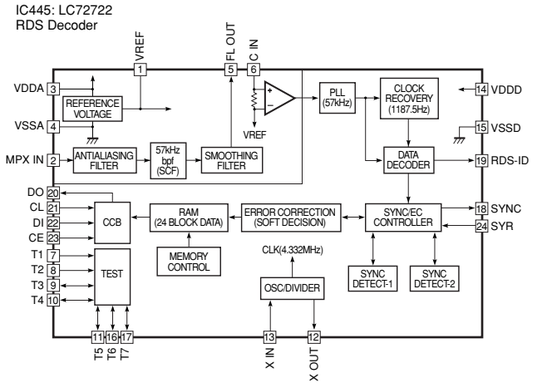

IC446, 447: M5220L
Dual OP-Amp.

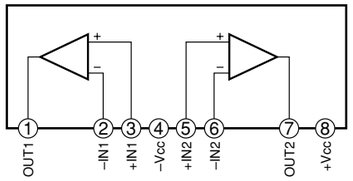

IC731~733: μPC4570C
Dual OP-Amp

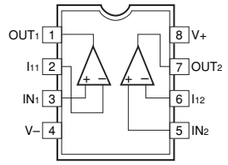

IC734: LB1641
Motor Driver

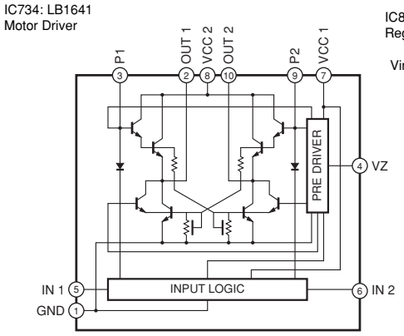

IC771, 772: NJM2068L-D
Dual OP-Amp

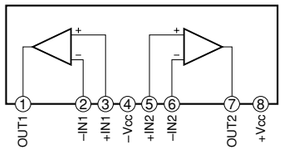

IC802: MSM514260C-60JS
4Mbit DRAM

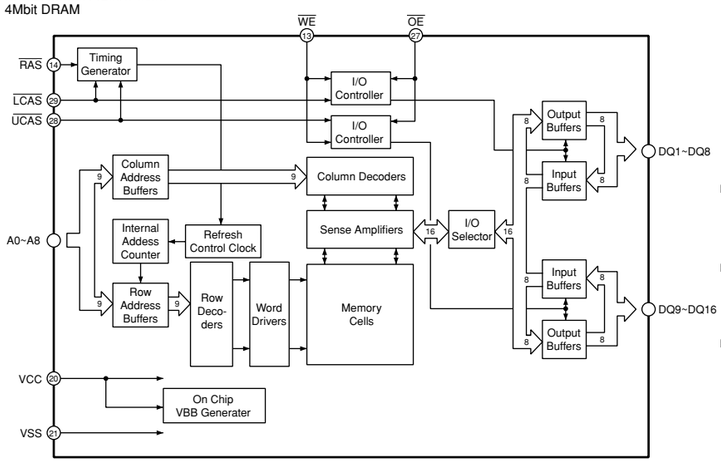

IC803: PQ025EZ5MZP
Regulator

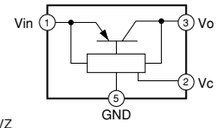

IC804: μPC29M33T-E1
Voltage Regulator

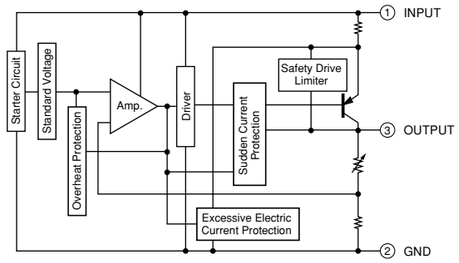

IC805: TC74HC00AF
IC808: TC74HCU04AF
Quad 2-Input Nand Gate

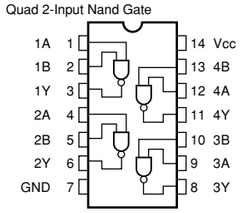

IC806: TC74VHCT08AF
Quad 2-Input And Gate

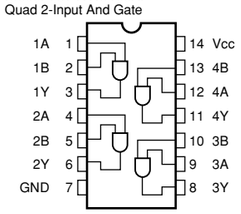

IC807: NJM2904M
Dual OP-Amp

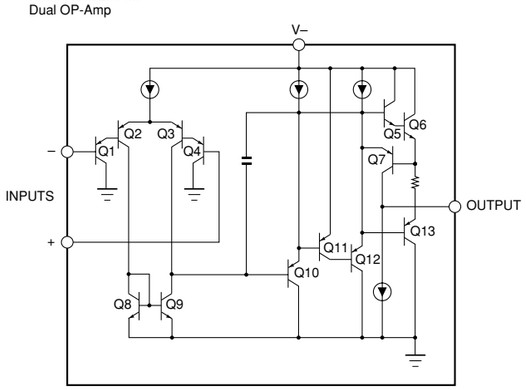

IC812: AK4527VQ
24bit CODEC

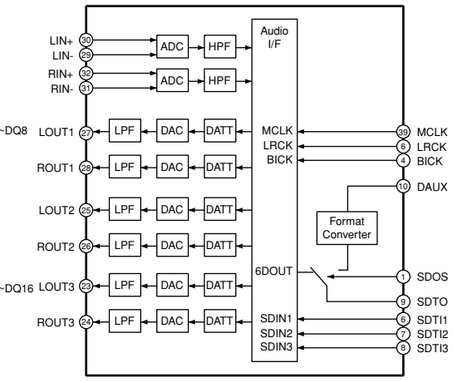

IC813~817 : M5220FP

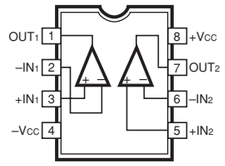

IC901: LC75725E
LCD Driver

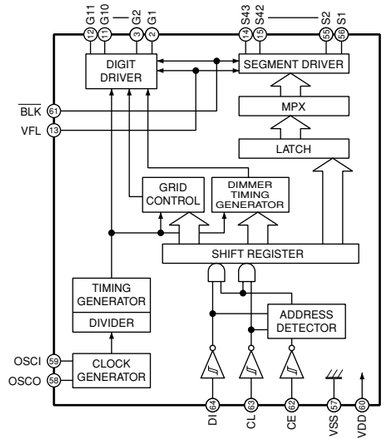

IC903: NJM78L05A-T3
Voltage Regulator

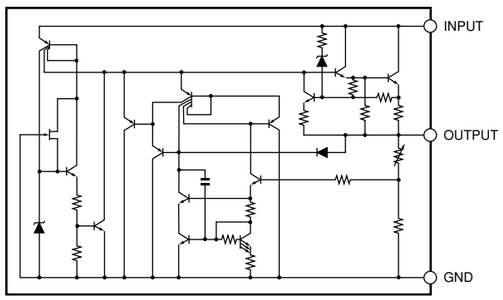

■ SCHEMATIC DIAGRAM (INPUT)

CAPACITOR

REMARKS	PARTS NAME
NO MARK	ELECTROLYTIC CAPACITOR
⊗	TANTALUM CAPACITOR
NO MARK	CERAMIC CAPACITOR
⊕	CERAMIC TUBULAR CAPACITOR
⊕	POLYESTER FILM CAPACITOR
⊕	POLYSTIRENE FILM CAPACITOR
⊕	MICA CAPACITOR
⊕	POLYPROPYLENE FILM CAPACITOR
⊕	SEMICONDUCTIVE CERAMIC CAPACITOR

RESISTOR

REMARKS	PARTS NAME
NO MARK	CARBON FILM RESISTOR (P=5)
☑	CARBON FILM RESISTOR (P=10)
△	METAL OXIDE FILM RESISTOR
△	METAL FILM RESISTOR
◇	METAL PLATE RESISTOR
◪	FIRE PROOF CARBON FILM RESISTOR
○	CEMENT MOLDED RESISTOR
⊗	SEMI VARIABLE RESISTOR
■	CHIP RESISTOR

NOTICE (model)
(J)····· JAPANESE (B)····· BRITISH
(U)····· U.S.A (G)····· EUROPEAN
(C)····· CANADIAN (T)····· CHINA
(R)····· GENERAL (L)····· SINGAPORE
(A)····· AUSTRALIAN

Point ① Pin 12 of IC445

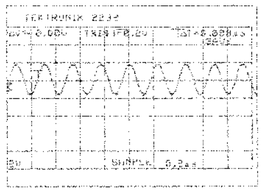

PIN CONNECTION DIAGRAM OF TRANSISTORS, DIODES AND ICS.

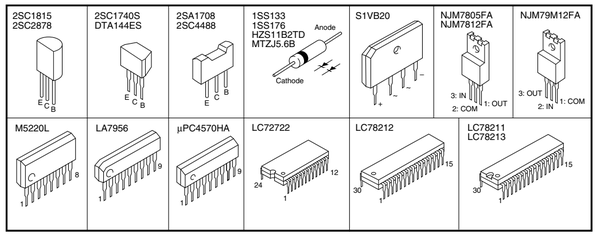

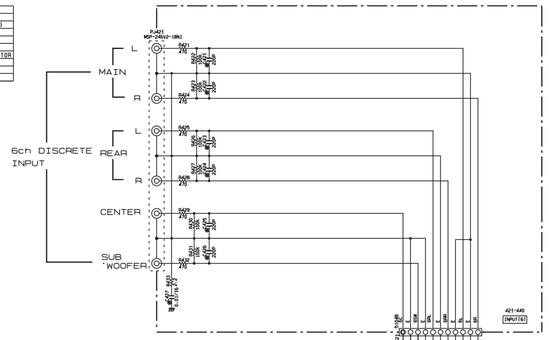

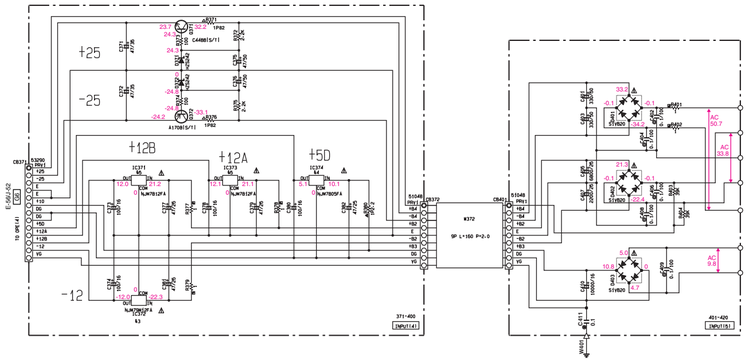

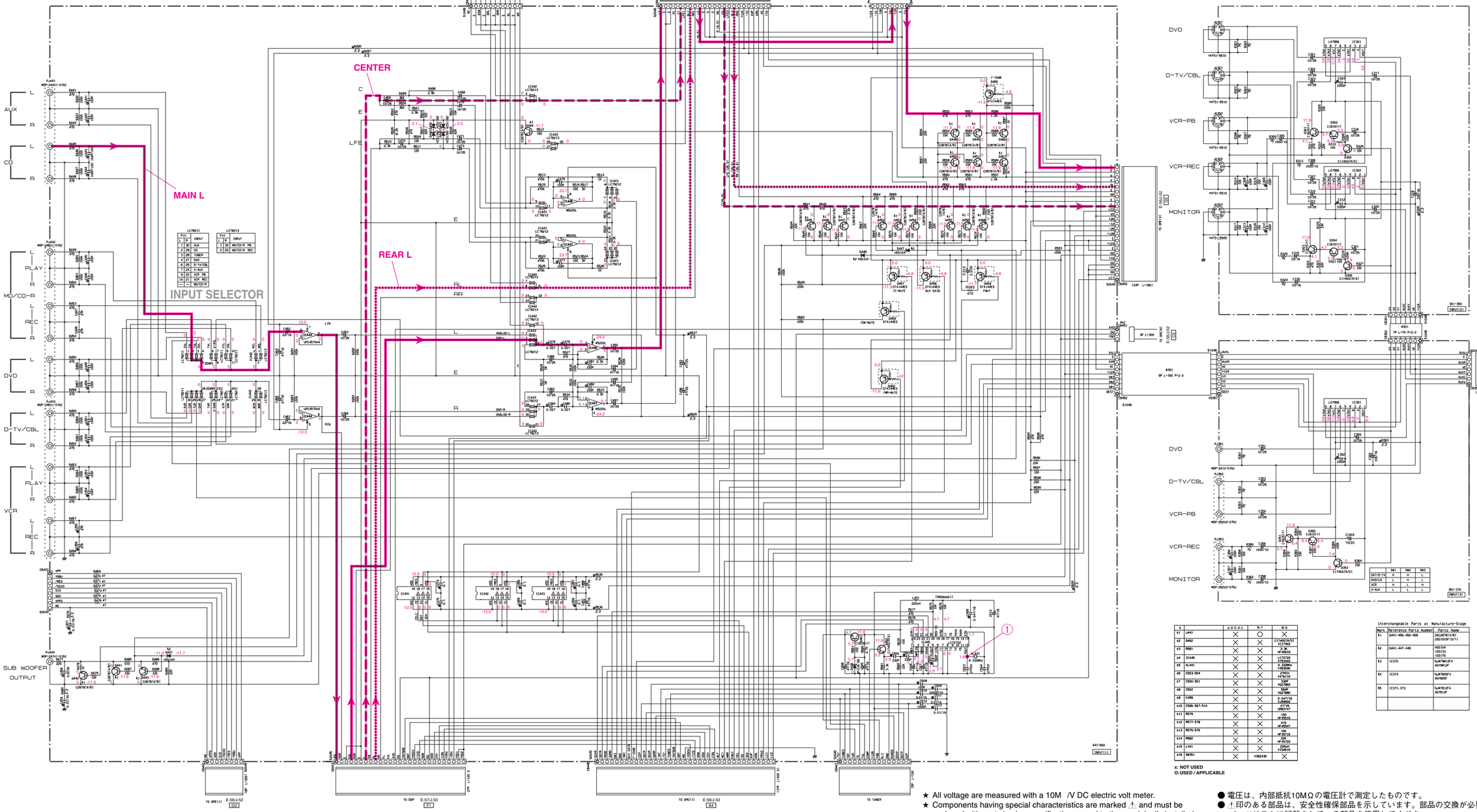

Pin	L	R	INPUT
1	30		AUX
2	29		CD
3	28		TUNER
4	27		DVD
5	26		D-TV/CBL
7	24		V-AUX
9	22		VCR PB
10	21		VCR REC
—	—		MD/CD-R

Pin	L	R	INPUT
1	30		MD/CD-R PB
2	29		MD/CD-R REC

SW	SW1	SW2	SW3
SAT/D-TV	H	H	L
DVD/LD	L	H	L
VCR	H	L	H
V-AUX	L	L	L

S	J.U.C.A.L	R.T	B.S
S1	J441	×	○
S2	D462	×	×
S3	R581	×	×
S4	IC445	×	×
S5	RL441	×	×
S6	C503-504	×	×
S7	C500-501	×	×
S8	C502	×	×
S9	C499	×	×
S10	C506-507-514	×	×
S11	R579	×	×
S12	R577-578	×	×
S13	R575-576	×	×
S14	R582	×	×
S15	L441	×	×
S16	SW351	×362430	×

x: NOT USED
O:USED / APPLICABLE

Interchangeable Parts at Manufacture-Stage

Mark	Reference Parts Number	Parts Name
K1	D441-456-466-468	2SC2878(A/B) 2SD2018(S/T)
K2	D441-447.448	HSS104 1SS133 1SS176
K3	IC372	NJM79M12FA AN7812F
K4	IC374	NJM7805FA AN7805F
K5	IC371-373	NJM79L12FA AN7912F

★ All voltage are measured with a 10M /V DC electric volt meter.
★ Components having special characteristics are marked ⚠ and must be replaced with parts having specifications equal to those originally installed.
★ Schematic diagram is subject to change without notice.

● 電圧は、内部抵抗10MΩの電圧計で測定したものです。
● ⚠印のある部品は、安全性確保部品を示しています。部品の交換が必要な場合、パーツリストに記載されている部品を使用してください。
● 本回路図は標準回路図です。改良のため予告なく変更することがございます。

■ SCHEMATIC DIAGRAM (OPERATION)

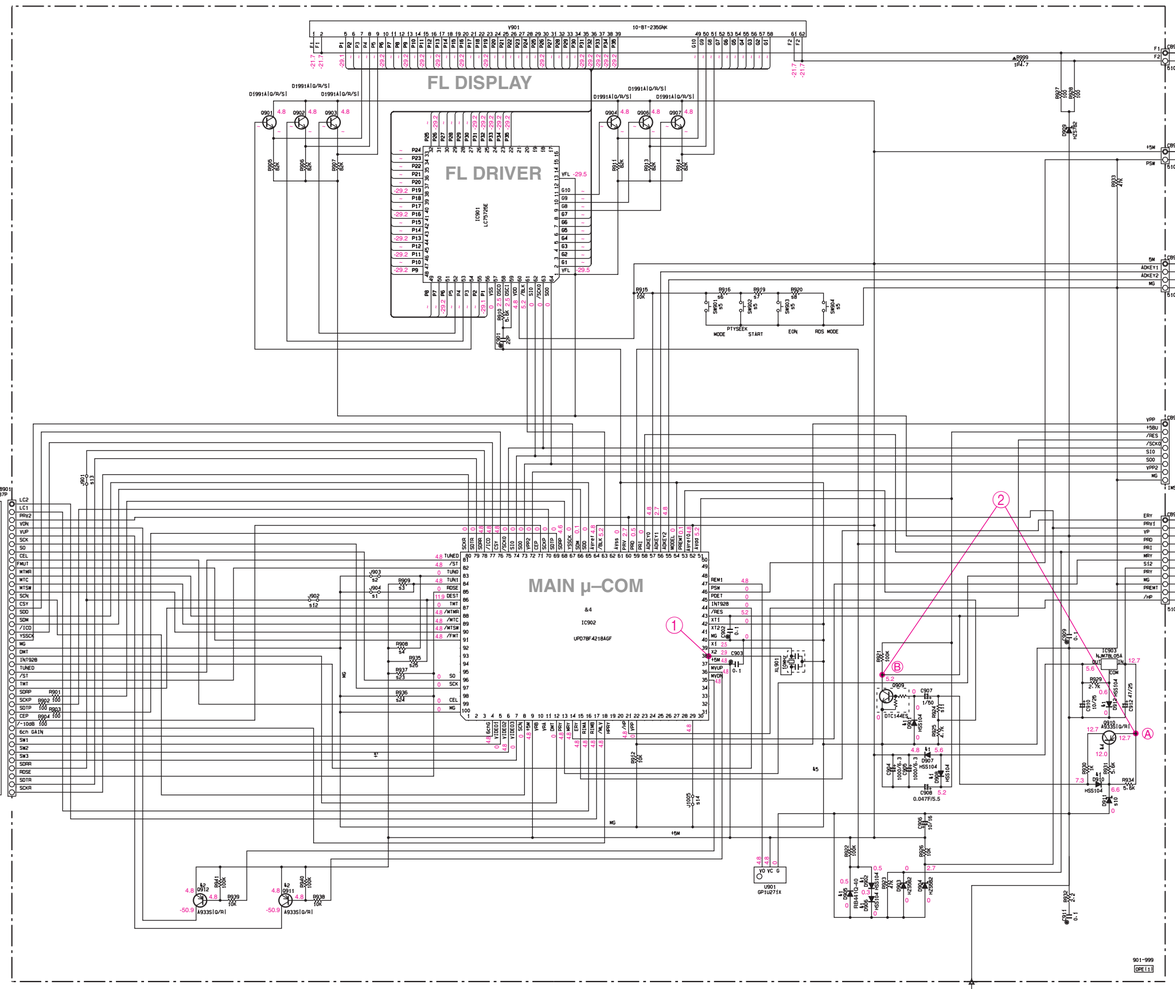

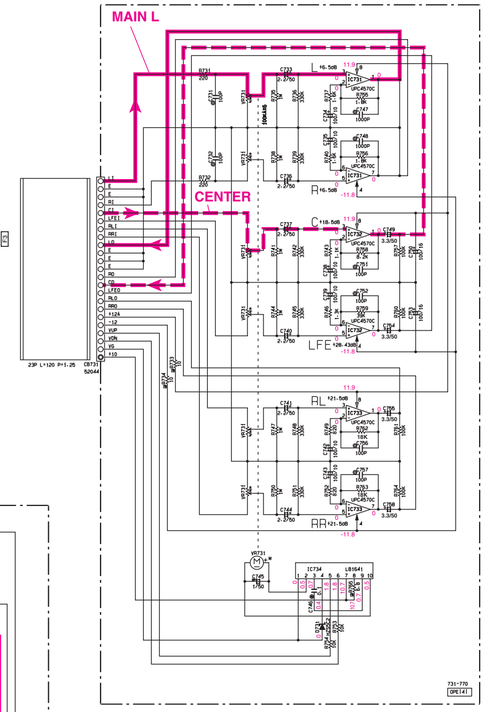

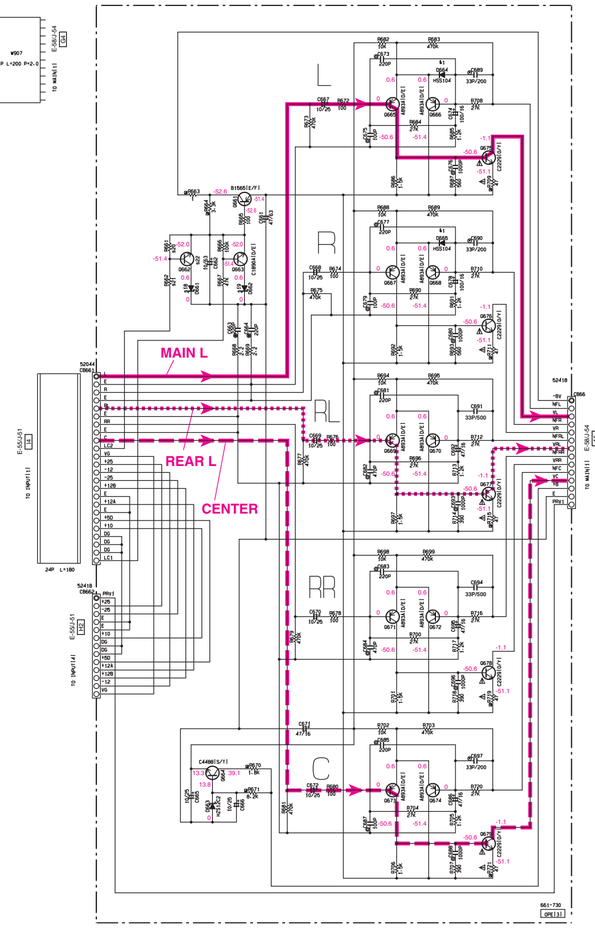

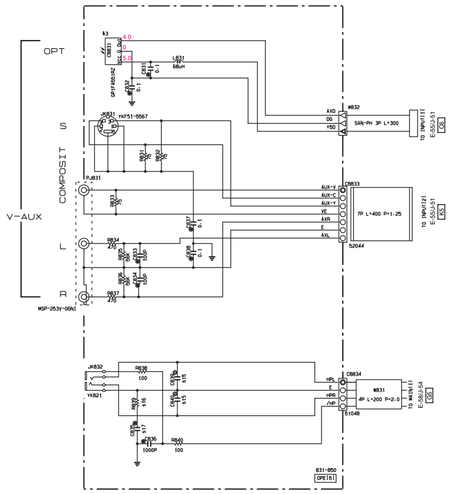

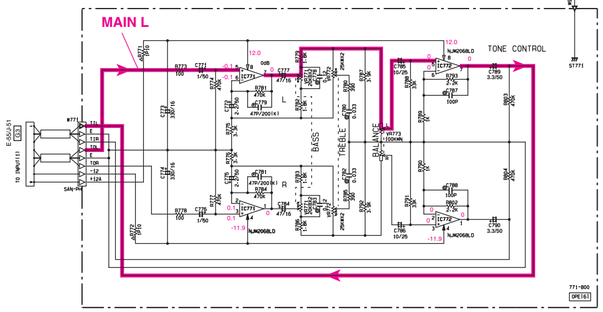

Point ① Pin 38 of IC902

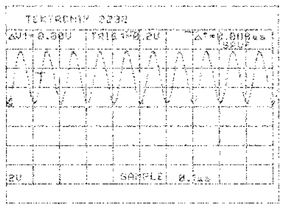

Point ② emitter of Q910 and collector of Q911

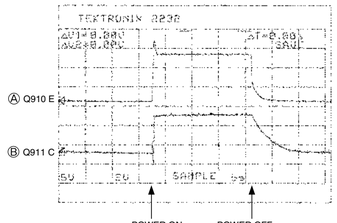

		J	U-C	R-T	A-L	B-S
s1	J904	○	○	×	×	×
s2	J903	○	×	×	○	○
s3	R909	×	×	100K HF45810	100K HF45810	100K HF45810
s4	R908	×	100K HF45810	100K HF45810	×	×
s5	SW901~904	×	×	×	×	VG39290
s6	R916	×	×	×	×	2.2K HF45620
s7	R919	×	×	×	×	1.5K HF45615
s8	R920	×	×	×	×	2.2K HF45620
s10	D911	HZS7A2 VW07460	HZS7A2 VW07460	HZS6B2 VW07440	HZS7A2 VW07460	HZS7A2 VW07460
s11	R924	2.2K HF45620	2.2K HF45620	1.5K HF45615	2.2K HF45620	2.2K HF45620
s12	J902	×	×	○	×	×
s13	J901	○	○	×	○	○
s14	J1005	×	×	○	○	○
s15	CB39~CB40	×	×	0.01 [U46541G]	0.01 [U46541G]	0.01 [U46541G]
s16	R839	×	×	2.2 [HF45321]	2.2 [HF45321]	2.2 [HF45321]
s17	CB35	×	×	0.01/16 [VF45730]	0.01/16 [VF45730]	0.01/16 [VF45730]
s18	D661	×	HZS10B2 VW07600 MTZJ10C VG44180 [Alt.Part]	HZS20 VW07610 MTZJ20C VG44190 [Alt.Part]	HZS20 VW07610 MTZJ20C VG44190 [Alt.Part]	HZS20 VW07610 MTZJ20C VG44190 [Alt.Part]
s19	D662	HZS20 VW07610 MTZJ20C VG44190 [Alt.Part]	HZS20 VW01450	HZS40 VW07630 MTZJ40C VG44270 [Alt.Part]	HZS40 VW07630 MTZJ40C VG44270 [Alt.Part]	HZS40 VW07630 MTZJ40C VG44270 [Alt.Part]
s20	R661	×	100K HF45810	100K HF45810	100K HF45810	100K HF45810
s21	R662	×	47K HF45747	47K HF45747	47K HF45747	47K HF45747
s22	D662	×	CD190A1D/E1 VP08310	CD190A1D/E1 VP08310	CD190A1D/E1 VP08310	CD190A1D/E1 VP08310
s23	R937	×	×	×	×	100K HF45810
s24	R936	100K HF45810	100K HF45810	100K HF45810	100K HF45810	×
s25	R935	×	×	100K HF45810	×	×

x: NOT USED
O: USED / APPLICABLE

CAPACITOR

REMARKS	PARTS NAME
NO MARK	ELECTROLYTIC CAPACITOR
⊗	TANTALUM CAPACITOR
NO MARK	CERAMIC CAPACITOR
◉	CERAMIC TUBULAR CAPACITOR
◎	POLYESTER FILM CAPACITOR
◎	POLYSTYRENE FILM CAPACITOR
◎	MICA CAPACITOR
◎	POLYPROPYLENE FILM CAPACITOR
◉	SEMICONDUCTIVE CERAMIC CAPACITOR
◎	POLYPHENYLENE SULFIDE FILM CAPACITOR

RESISTOR

REMARKS	PARTS NAME
NO MARK	CARBON FILM RESISTOR (P±5)
☑	CARBON FILM RESISTOR (P±10)
△	METAL OXIDE FILM RESISTOR
▲	METAL FILM RESISTOR
⊠	METAL PLATE RESISTOR
◪	FIRE PROOF CARBON FILM RESISTOR
◎	CEMENT MOLDED RESISTOR
◇	SEMI VARIABLE RESISTOR
■	CHIP RESISTOR

NOTICE (model)
(J)····· JAPANESE
(U)····· U.S.A
(C)····· CANADIAN
(B)····· GENERAL
(A)····· AUSTRALIAN
(B)····· BRITISH
(G)····· EUROPEAN
(T)····· CHINA
(L)····· SINGAPORE

Interchangeable Parts at Manufacture-Stage

Mark	Reference Parts Number	Parts Name
k1	D664~D69 901~902~905~908~910~912	HSS104 1SS133 HSS178
k2	Q910~912	2SA933S[D/R] 2SA1115[F/T] 2SA1309R[D/R/S]
k3	CB831	GP1F405A02 TDK179
k4	IC902	UPD78F4218AGF-3BA UPD78F4218A
k5		

PIN CONNECTION DIAGRAM OF TRANSISTORS, DIODES AND ICS.

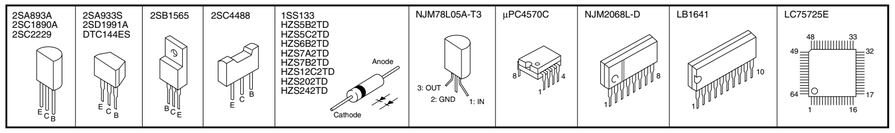

★ All voltage are measured with a 10M /V DC electric volt meter.
★ Components having special characteristics are marked ⚠ and must be replaced with parts having specifications equal to those originally installed.
★ Schematic diagram is subject to change without notice.

● 電圧は、内部抵抗10MΩの電圧計で測定したものです。
● ⚠印のある部品は、安全性確保部品を示しています。部品の交換が必要な場合、パーツリストに記載されている部品を使用してください。
● 本回路図は標準回路図です。改良のため予告なく変更することがございます。

■ SCHEMATIC DIAGRAM (DSP)

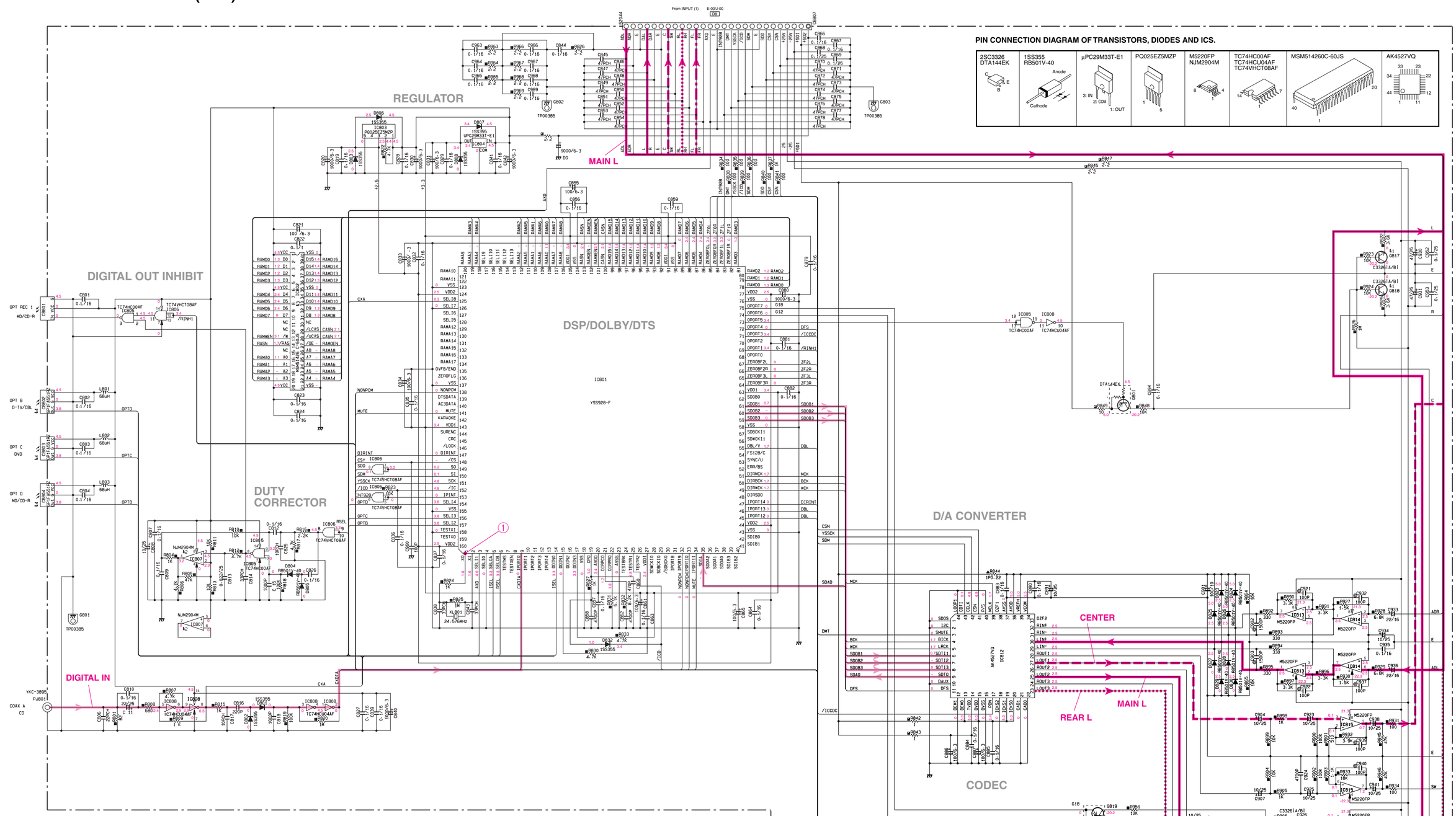

PIN CONNECTION DIAGRAM OF TRANSISTORS, DIODES AND ICS.

2SC3326 DTA144EK	1SS355 RB501V-40	μPC29M33T-E1	PQ025EZ5MZP	M5220FP NJM2904M	TC74HC00AF TC74HCU04AF TC74VHCT08AF	MSM514260C-60JS	AK4527VQ
C, B, E	Anode, Cathode	3: IN, 2: COM, 1: OUT	1, 5	8, 4, 1	14, 7, 1	40, 20, 1	33, 23, 34, 22, 44, 12, 1, 11

RESISTOR

REMARKS	PARTS NAME
NO MARK	CARBON FILM RESISTOR (P=5)
☑	CARBON FILM RESISTOR (P=10)
△	METAL OXIDE FILM RESISTOR
◭	METAL FILM RESISTOR
⊠	METAL PLATE RESISTOR
◪	FIRE PROOF CARBON FILM RESISTOR
□	CEMENT MOLDED RESISTOR
⊘	SEMI VARIABLE RESISTOR
■	CHIP RESISTOR

CAPACITOR

REMARKS	PARTS NAME	
NO MARK	ELECTROLYTIC CAPACITOR	⊟
⊗	TANTALUM CAPACITOR	⊟
NO MARK	CERAMIC CAPACITOR	⫼
◉	CERAMIC TUBULAR CAPACITOR	⫼
◎	POLYESTER FILM CAPACITOR	⫼
○	POLYSTYRENE FILM CAPACITOR	⫼
ⓘ	MICA CAPACITOR	⫼
ⓟ	POLYPROPYLENE FILM CAPACITOR	⫼
◉	SEMICONDUCTIVE CERAMIC CAPACITOR	⫼
ⓢ	POLYPHENYLENE SULFIDE FILM CAPACITOR	⫼

NOTICE (model)

(J)····· JAPANESE
(U)····· U.S.A
(C)····· CANADIAN
(R)····· GENERAL
(A)····· AUSTRALIAN
(B)····· BRITISH
(G)····· EUROPEAN
(T)····· CHINA
(L)····· SINGAPORE

Interchangeable Parts at Manufacture-Stage

Mark	Reference Parts Number	Parts Name
k1	QB17.81B.B21-B24	2SC3326(A/B) 2SC3326(B)
k2	IC807	NJM2904M NJM2904G
k3	IC802	MSM514260C-60JS SDM4260CLU-65 MSM514260E-60JS
k4	CB802-804	GP1FA551RZ TQRX179

Point ① Pin 1 of IC801

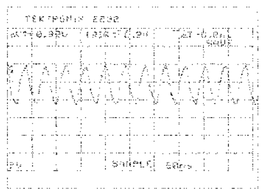

★ All voltage are measured with a 10M /V DC electric volt meter.
★ Components having special characteristics are marked ⚠ and must be replaced with parts having specifications equal to those originally installed.
★ Schematic diagram is subject to change without notice.

● 電圧は、内部抵抗10MΩの電圧計で測定したものです。
● ⚠印のある部品は、安全性確保部品を示しています。部品の交換が必要な場合、パーツリストに記載されている部品を使用してください。
● 本回路図は標準回路図です。改良のため予告なく変更することがございます。

■ SCHEMATIC DIAGRAM (MAIN)

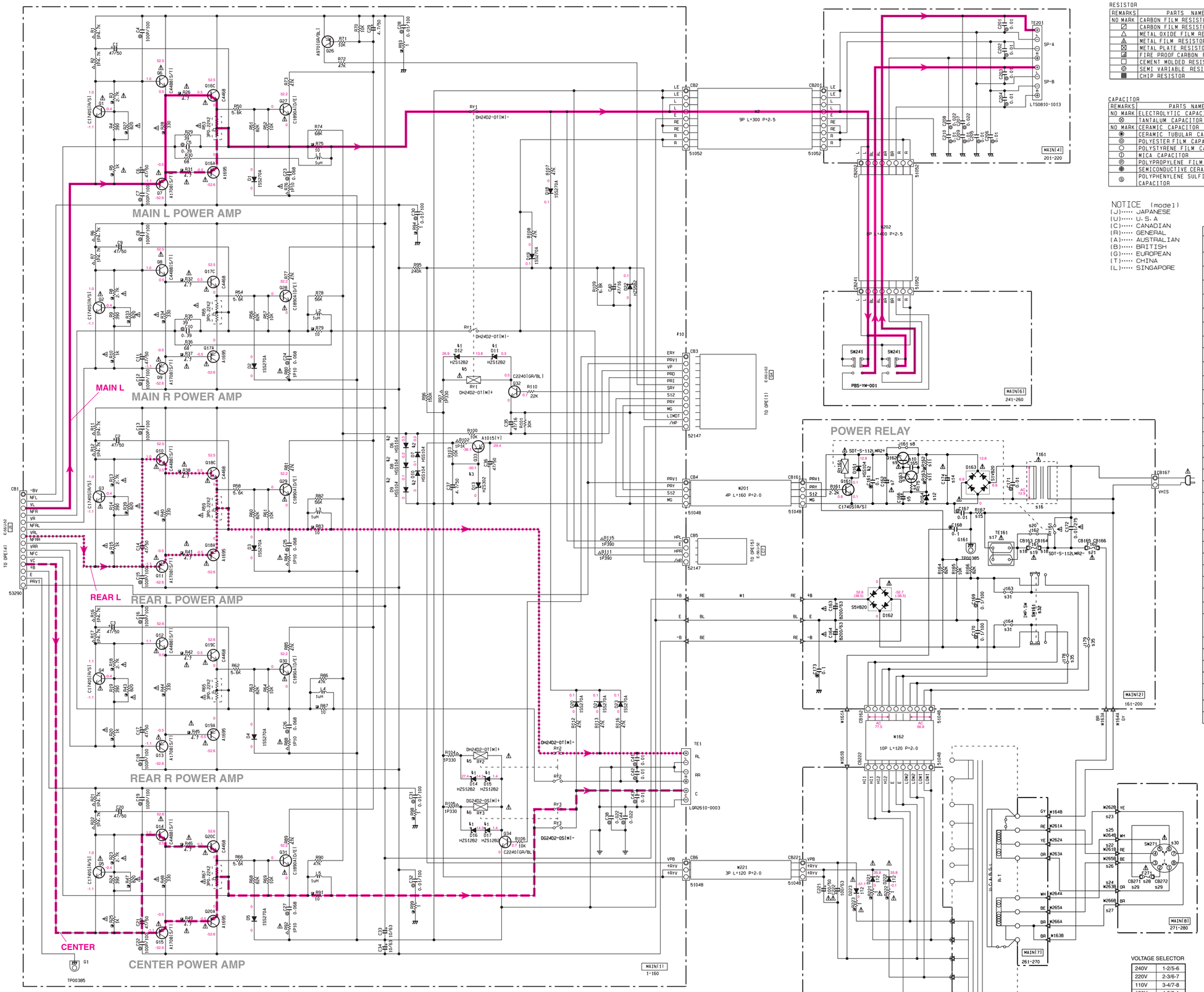

RESISTOR

REMARKS	PARTS NAME
NO MARK	CARBON FILM RESISTOR (P=5)
◪	CARBON FILM RESISTOR (P=10)
△	METAL OXIDE FILM RESISTOR
⚠	METAL FILM RESISTOR
⊠	METAL PLATE RESISTOR
◪	FIRE PROOF CARBON FILM RESISTOR
□	CEMENT MOLDED RESISTOR
⊘	SEMI VARIABLE RESISTOR
■	CHIP RESISTOR

CAPACITOR

REMARKS	PARTS NAME	
NO MARK	ELECTROLYTIC CAPACITOR	電解
⊗	TANTALUM CAPACITOR	電解
NO MARK	CERAMIC CAPACITOR	其他
◉	CERAMIC TUBULAR CAPACITOR	其他
◎	POLYESTER FILM CAPACITOR	其他
○	POLYSTYRENE FILM CAPACITOR	其他
Ⓘ	MICA CAPACITOR	其他
⊚	POLYPROPYLENE FILM CAPACITOR	其他
◉	SEMICONDUCTIVE CERAMIC CAPACITOR	其他
⊙	POLYPHENYLENE SULFIDE FILM CAPACITOR	其他

Interchangeable Parts at Manufacture-Stage

Mark	Reference Parts Number	Parts Name
⚠1	D11-12-14-15-16-17	HZS12B2 MTZJ13B
⚠2	D6-10-161	HSS104 1SS133 1SS176
⚠3	D13	HZS302 MTZJ30D
⚠5	RY1-2	DH24D2-0T[W] DH24D2-0T[W]-SL (V632260)
⚠6	RY3	DG24D2-0S[W] DS24D2-0S[W] (V596630)

NOTICE (model)
(J)····· JAPANESE
(U)····· U.S.A
(C)····· CANADIAN
(R)····· GENERAL
(A)····· AUSTRALIAN
(B)····· BRITISH
(G)····· EUROPEAN
(T)····· CHINA
(L)····· SINGAPORE

S	Circuit No.	MODEL No.						
		J	U·C	R·T	A	L	B	G
1	C41-42.43 201-206.209.210	X	X	X	0.01 [UA65410]	0.01 [UA65410]	0.01 [UA65410]	0.01 [UA65410]
2	C38.44.207.208	X	X	X	0.022 [UA65422]	0.022 [UA65422]	0.022 [UA65422]	0.022 [UA65422]
3	Q163	X	X	2SC1890[E] [VP88290]	X	X	X	X
4	R175	X	X	100 [HF45510]	X	X	X	X
5	C166	X	X	10/16 [UR83710]	X	X	X	X
6	TE201	V677120	V677120	V677120	V677120	V591220	V591220	V591220
7	C162	470/25 [UR84847]	470/25 [UR84847]	220/25 [UR84822]	470/25 [UR84847]	470/25 [UR84847]	470/25 [UR84847]	470/25 [UR84847]
8	J161	0	0	X	0	0	0	0
9	Q162	X	X	D2396[J/K] VR51080	X	X	X	X
10	C165	X	X	1000P FG61310	X	X	X	X
11	R162-163	X	X	5.6K HV75656	X	X	X	X
12	D164	X	X	HZS12B2TD VM97560	X	X	X	X
13	R96	220K HF45822	150K HF45815	150K HF45815	150K HF45815	150K HF45815	150K HF45815	150K HF45815
14	C174	X	X	10/100 UR89710	X	X	X	X
15	R167	X	1/2P2.2M V673000	X	X	X	X	X
16	T161	XW605	XW606	XW607	XW608	XW608	XW608	XW608
17	TE161	VU54310	VU54310	V586740	VT91500	VU54340	VU54330	VU54340
18	CB163-164	X	VP20650	X	X	X	X	VP20650
19	F161	X	2A125V VS62250	X	X	X	X	T2.5AH250V V194290
20	J162	0	0	0	0	0	0	X
21	F162	7A125V VP90990	7A125V VP90990	7A125V VP90990	T3.15AL250V KB00076	T3.15AL250V KB00076	T3.15AL250V KB00076	T3.15AL250V KB00076
22	W261	X	X	MH02025	X	X	X	X
23	W262	X	X	MH04025	X	X	X	X
24	W263	X	X	MH03020	X	X	X	X
25	W264	X	X	MH09025	X	X	X	X
26	W265	X	X	MH06025	X	X	X	X
27	W266	X	X	MH01025	X	X	X	X
28	F271	X	X	T3.15AL250V KB00076	X	X	X	X
29	CB271-272	X	X	VP20650	X	X	X	X
30	SW271	X	X	MATSUSHITA VA96180 TKB V718230	X	X	X	X
31	J163-164	0	X	X	X	X	X	X
32	SW161	X	V410420 SL13B-022	V410420 SL13B-022	V410420 SL13B-022	V410420 SL13B-022	V410420 SL13B-022	V410420 SL13B-022
34	J221-224	0	X	X	X	X	X	X
35	J178-179 J222-223	X	0	0	0	0	0	0
36	R97-104-105	VP94090 1P560	VP94070 1P330	VP94070 1P330	VP94070 1P330	VP94070 1P330	VP94070 1P330	VP94070 1P330
37	TE1	V447070 LQR2610-0001	V447070 LQR2610-0001	V447070 LQR2610-0001	V447070 LQR2610-0001	V447090 LQR2610-0003	V447090 LQR2610-0003	V447090 LQR2610-0003

x: NOT USED
O: USED / APPLICABLE

PIN CONNECTION DIAGRAM OF TRANSISTORS, DIODES AND ICS.

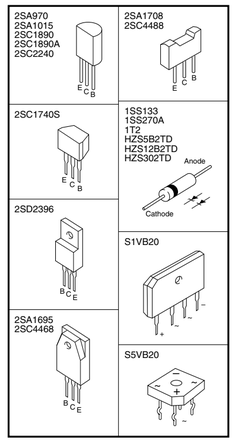

VOLTAGE SELECTOR

240V	1-2/5-6
220V	2-3/6-7
110V	3-4/7-8
120V	4-5/8-1

★ All voltage are measured with a 10M /V DC electric volt meter.
★ Components having special characteristics are marked ⚠ and must be replaced with parts having specifications equal to those originally installed.
★ Schematic diagram is subject to change without notice.

● 電圧は、内部抵抗10MΩの電圧計で測定したものです。
● ⚠印のある部品は、安全性確保部品を示しています。部品の交換が必要な場合、パーツリストに記載されている部品を使用してください。
● 本回路図は標準回路図です。改良のため予告なく変更することがございます。

PARTS LIST

■ ELECTRICAL PARTS

■ **WARNING**

Components having special characteristics are marked ⚠ and must be replaced with parts having specifications equal to those originally installed.

- Carbon resistors (1/6W or 1/4W) are not included in the ELECTRICAL PARTS List. For the parts No. of the carbon resistors, refer to last page.

ABBREVIATIONS IN THIS LIST ARE AS FOLLOWS:

C.A.EL.CHP	: CHIP ALUMI.ELECTROLYTIC CAP
C.CE	: CERAMIC CAP
C.CE.ARRAY	: CERAMIC CAP ARRAY
C.CE.CHP	: CHIP CERAMIC CAP
C.CE.ML	: MULTILAYER CERAMIC CAP
C.CE.M.CHP	: CHIP MULTILAYER CERAMIC CAP
C.CE.SAFTY	: RECOGNIZED CERAMIC CAP
C.CE.TUBLR	: CERAMIC TUBULAR CAP
C.CE.SMI	: SEMI CONDUCTIVE CERAMIC CAP
C.EL	: ELECTROLYTIC CAP
C.MICA	: MICA CAP
C.ML.FLM	: MULTILAYER FILM CAP
C.MP	: METALLIZED PAPER CAP
C.MYLAR	: MYLAR FILM CAP
C.MYLAR.ML	: MULTILAYER MYLAR FILM CAP
C.PAPER	: PAPER CAPACITOR
C.PLS	: POLYSTYRENE FILM CAP
C.POL	: POLYESTER FILM CAP
C.POLY	: POLYETHYLENE FILM CAP
C.PP	: POLYPROPYLENE FILM CAP
C.TNTL	: TANTALUM CAP
C.TNTL.CHP	: CHIP TANTALUM CAP
C.TRIM	: TRIMMER CAP
CN	: CONNECTOR
CN.BS.PIN	: CONNECTOR,BASE PIN
CN.CANNON	: CONNECTOR,CANNON
CN.DIN	: CONNECTOR,DIN
CN.FLAT	: CONNECTOR,FLAT CABLE
CN.POST	: CONNECTOR,BASE POST
COIL.MX.AM	: COIL,AM MIX
COIL.AT.FM	: COIL,FM ANTENNA
COIL.DT.FM	: COIL,FM DETECT
COIL.MX.FM	: COIL,FM MIX
COIL,OUTPT	: OUTPUT COIL
DIOD.ARRAY	: DIODE ARRAY
DIODE.BRG	: DIODE BRIDGE
DIODE.CHP	: CHIP DIODE
DIODE.SHOT	: SCHOTTKY BARRIER DIODE
DIODE.VAR	: VARACTOR DIODE
DIOD.Z.CHP	: CHIP ZENER DIODE
DIODE.ZENR	: ZENER DIODE
DSCR.CE	: CERAMIC DISCRIMINATOR
FER.BEAD	: FERRITE BEADS
FER.CORE	: FERRITE CORE
FET.CHP	: CHIP FET
FL.DSPLY	: FLUORESCENT DISPLAY
FLTR.CE	: CERAMIC FILTER
FLTR.COMB	: COMB FILTER MODULE
FLTR.LC.RF	: LC FILTER,EMI
GND.MTL	: GROUND PLATE
GND.TERM	: GROUND TERMINAL
HOLDER.FUS	: FUSE HOLDER
IC.PRTCT	: IC PROTECTOR
JUMPER.CN	: JUMPER CONNECTOR
JUMPER.TST	: JUMPER,TEST POINT
L.DTCT	: LIGHT DETECTING MODULE
L.EMIT	: LIGHT EMITTING MODULE
LED.DSPLY	: LED DISPLAY
LED.INFRD	: LED,INFRARED
MODUL.RF	: MODULATOR,RF
PHOT.CPL	: PHOTO COUPLER
PHOT.INTR	: PHOTO INTERRUPTER
PHOT.RFLCT	: PHOTO REFLECTOR
PIN.TEST	: PIN,TEST POINT
PLST.RIVET	: PLASTIC RIVET
R.ARRAY	: RESISTOR ARRAY
R.CAR.	: CARBON RESISTOR
R.CAR.CHP	: CHIP RESISTOR
R.CAR.FP	: FLAME PROOF CARBON RESISTOR
R.FUS	: FUSABLE RESISTOR
R.MTL.CHP	: CHIP METAL FILM RESISTOR
R.MTL.FLM	: METAL FILM RESISTOR
R.MTL.OXD	: METAL OXIDE FILM RESISTOR
R.MTL.PLAT	: METAL PLATE RESISTOR
RSNR.CE	: CERAMIC RESONATOR
RSNR.CRYS	: CRYSTAL RESONATOR
R.TW.CEM	: TWIN CEMENT FIXED RESISTOR
R.WW	: WIRE WOUND RESISTOR
SCR.BND.HD	: BIND HEAD B-TITE SCREW
SCR.BW.HD	: BW HEAD TAPPING SCREW
SCR.CUP	: CUP TITE SCREW
SCR.TERM	: SCREW TERMINAL
SCR.TR	: SCREW,TRANSISTOR
SUPRT.PCB	: SUPPORT,P.C.B.
SURG.PRTCT	: SURGE PROTECTOR
SW.TACT	: TACT SWITCH
SW.LEAF	: LEAF SWITCH
SW.LEVER	: LEVER SWITCH
SW.MICRO	: MICRO SWITCH
SW.PUSH	: PUSH SWITCH
SW.RT.ENC	: ROTARY ENCODER
SW.RT.MTR	: ROTARY SWITCH WITH MOTOR
SW.RT	: ROTARY SWITCH
SW.SLIDE	: SLIDE SWITCH
TERM.SP	: SPEAKER TERMINAL
TERM.WRAP	: WRAPPING TERMINAL
THRMST.CHP	: CHIP THERMISTOR
TR.CHP	: CHIP TRANSISTOR
TR.DGT	: DIGITAL TRANSISTOR
TR.DGT.CHP	: CHIP DIGITAL TRANSISTOR
TRANS	: TRANSFORMER
TRANS.PULS	: PULSE TRANSFORMER
TRANS.PWR	: POWER TRANSFORMER ASS'Y
TUNER.AM	: TUNER PACK,AM
TUNER.FM	: TUNER PACK,FM
TUNER.PK	: FRONT-END TUNER PACK
VR	: ROTARY POTENTIOMETER
VR.MTR	: POTENTIOMETER WITH MOTOR
VR.SW	: POTENTIOMETER WITH ROTARY SW
VR.SLIDE	: SLIDE POTENTIOMETER
VR.TRIM	: TRIMMER POTENTIOMETER

Note) Those parts marked with "#" are not included in the P.C.B. ass'y.

P.C.B. INPUT

Schm Ref.	PART NO.	Description			Markets
* * *	V7261400	P.C.B.	INPUT		UCAL
	V7261500	P.C.B.	INPUT		RT
	V7261600	P.C.B.	INPUT		BG
CB301	Vi878500	CN.BS.PIN	7P		
CB351	Vi878700	CN.BS.PIN	9P		
CB352	Vi878500	CN.BS.PIN	7P		
CB353	VQ044300	CN.BS.PIN	7P		
CB371	VQ963400	CN.BS.PIN	13P		
CB372	Vi878700	CN.BS.PIN	9P		
CB401	Vi878700	CN.BS.PIN	9P		
CB421	Vi878900	CN.BS.PIN	11P		
CB441	VP682300	CN.BS.PIN	8P		
CB442	VP682200	CN.BS.PIN	8P		
CB443	VQ047800	CN.BS.PIN	27P		
CB444	Vi878900	CN.BS.PIN	11P		
CB445	VQ048600	CN	37P TE		
CB446	VM689000	CN.BS.PIN	23P		
CB447	VM859600	CN.BS.PIN	15P		
CB448	VB390400	CN.BS.PIN	8P		
CB450	VP127700	CN	24P		
CB451	VB389900	CN.BS.PIN	3P		
CB452	Vi878700	CN.BS.PIN	9P		
C301	UR847100	C.EL	10uF	25V	
C302	UR847100	C.EL	10uF	25V	
C303	UR847100	C.EL	10uF	25V	
C304	VF467000	C.CE.TUBLR	1000pF	50V	
C305	UR829100	C.EL	1000uF	10V	
C306	UR829100	C.EL	1000uF	10V	
C307	UR847100	C.EL	10uF	25V	
C308	VF466800	C.CE.TUBLR	100pF	50V	
C309	VF466800	C.CE.TUBLR	100pF	50V	
C310	UR847100	C.EL	10uF	25V	
C311	UR847100	C.EL	10uF	25V	
C312	VF467000	C.CE.TUBLR	1000pF	50V	
C313	VF466800	C.CE.TUBLR	100pF	50V	
C314	VF466800	C.CE.TUBLR	100pF	50V	
C315	UR837330	C.EL	33uF	16V	
C316	UR837330	C.EL	33uF	16V	
C317	UR847100	C.EL	10uF	25V	
C318	UR847100	C.EL	10uF	25V	
C319	UR838330	C.EL	330uF	16V	
C320	UR847100	C.EL	10uF	25V	
C321	UR847100	C.EL	10uF	25V	
C351	UR847100	C.EL	10uF	25V	
C352	VF467000	C.CE.TUBLR	1000pF	50V	
C353	UR847100	C.EL	10uF	25V	
C354	UR847100	C.EL	10uF	25V	
C355	UR829100	C.EL	1000uF	10V	
C356	VF466800	C.CE.TUBLR	100pF	50V	
C357	VF466800	C.CE.TUBLR	100pF	50V	
C358	UR829100	C.EL	1000uF	10V	
C359	UR847100	C.EL	10uF	25V	
C360	UR838330	C.EL	330uF	16V	
C369	UR847100	C.EL	10uF	25V	
C371	UR857470	C.EL	47uF	35V	
C372	UR857470	C.EL	47uF	35V	
C373	UR838100	C.EL	100uF	16V	
C374	UR838100	C.EL	100uF	16V	
C375	UR867470	C.EL	47uF	50V	
C376	UR867470	C.EL	47uF	50V	
C377	UR847470	C.EL	47uF	25V	
C378	UR838100	C.EL	100uF	16V	
C379	UR847470	C.EL	47uF	25V	

* New Parts

Schm Ref.	PART NO.	Description			Markets
C380	UR838100	C.EL	100uF	16V	
C381	UR847470	C.EL	47uF	25V	
C382	UR847470	C.EL	47uF	25V	
C401	UR868330	C.EL	330uF	50V	
C402	VS745400	C.POL.MTL	0.1uF	100V	
C403	UR868330	C.EL	330uF	50V	
C404	VS745400	C.POL.MTL	0.1uF	100V	
C405	UR749680	C.EL	6800uF	25V	
C406	VS745400	C.POL.MTL	0.1uF	100V	
C407	UR749220	C.EL	2200uF	25V	
C408	VS745400	C.POL.MTL	0.1uF	100V	
C409	VS745400	C.POL.MTL	0.1uF	100V	
C410	UR73A100	C.EL	10000uF	16V	
C411	VJ599100	C.CE.TUBLR	0.1uF	50V	
C412	VJ599100	C.CE.TUBLR	0.1uF	50V	
C421	VG278400	C.CE.TUBLR	220pF	50V	
C422	VG278400	C.CE.TUBLR	220pF	50V	
C423	VG278400	C.CE.TUBLR	220pF	50V	
C424	VG278400	C.CE.TUBLR	220pF	50V	
C425	VG278400	C.CE.TUBLR	220pF	50V	
C426	VG278400	C.CE.TUBLR	220pF	50V	
C427	VF467300	C.CE.TUBLR	0.01uF	16V	
C441	UA652100	C.MYLAR	100pF	50V	
C442	UA652100	C.MYLAR	100pF	50V	
C443	VR325000	C.MYLAR	100pF	100V	
C444	VR325000	C.MYLAR	100pF	100V	
C445	UA652100	C.MYLAR	100pF	50V	
C446	UA652100	C.MYLAR	100pF	50V	
C447	FG651470	C.CE	47pF	50V	
C448	FG651470	C.CE	47pF	50V	
C449	UA652100	C.MYLAR	100pF	50V	
C450	UA652100	C.MYLAR	100pF	50V	
C451	UA652100	C.MYLAR	100pF	50V	
C452	UA652100	C.MYLAR	100pF	50V	
C453	VF466800	C.CE.TUBLR	100pF	50V	
C454	VF466800	C.CE.TUBLR	100pF	50V	
C455	VF466700	C.CE.TUBLR	47pF	50V	
C456	VF466700	C.CE.TUBLR	47pF	50V	
C457	VF467300	C.CE.TUBLR	0.01uF	16V	
C458	UA655220	C.MYLAR	0.22uF	50V	
C459	VF467300	C.CE.TUBLR	0.01uF	16V	
C462	UR837220	C.EL	22uF	16V	
C463	UR847100	C.EL	10uF	25V	
C464	UR837470	C.EL	47uF	16V	
C465	UR837470	C.EL	47uF	16V	
C466	UR847100	C.EL	10uF	25V	
C467	UR837220	C.EL	22uF	16V	
C468	UR847100	C.EL	10uF	25V	
C469	UR847100	C.EL	10uF	25V	
C470	UR847100	C.EL	10uF	25V	
C471	UR847100	C.EL	10uF	25V	
C472	UR847100	C.EL	10uF	25V	
C473	UR847100	C.EL	10uF	25V	
C474	VJ599100	C.CE.TUBLR	0.1uF	50V	
C475	VJ599100	C.CE.TUBLR	0.1uF	50V	
C476	UA652100	C.MYLAR	100pF	50V	
C477	UA652100	C.MYLAR	100pF	50V	
C478	UA654270	C.MYLAR	0.027uF	50V	
C479	UA654270	C.MYLAR	0.027uF	50V	
C480	UR847100	C.EL	10uF	25V	
C481	UA652100	C.MYLAR	100pF	50V	
C482	UA652100	C.MYLAR	100pF	50V	
C483	UR847100	C.EL	10uF	25V	

* New Parts

P.C.B. INPUT

Schm Ref.	PART NO.	Description		Markets
C484	UA654270	C.MYLAR	0.027uF 50V	
C485	UA654270	C.MYLAR	0.027uF 50V	
C486	VJ599100	C.CE.TUBLR	0.1uF 50V	
C487	VJ599100	C.CE.TUBLR	0.1uF 50V	
C488	UR837470	C.EL	47uF 16V	
C489	VJ599100	C.CE.TUBLR	0.1uF 50V	
C490	VJ599100	C.CE.TUBLR	0.1uF 50V	
C491	UR837470	C.EL	47uF 16V	
C492	UR847100	C.EL	10uF 25V	
C493	UR847470	C.EL	47uF 25V	
C494	UR837470	C.EL	47uF 16V	
C495	UR837470	C.EL	47uF 16V	
C496	UR847470	C.EL	47uF 25V	
C497	UR847100	C.EL	10uF 25V	
C498	UR837470	C.EL	47uF 16V	
C499	VJ599000	C.CE.TUBLR	0.047uF 16V	BG
C500	VG278600	C.CE.TUBLR	330pF 50V	BG
C501	VG278600	C.CE.TUBLR	330pF 50V	BG
C502	VG278800	C.CE.TUBLR	560pF 50V	BG
C503	VA761100	C.CE	27pF 50V	BG
C504	VA761100	C.CE	27pF 50V	BG
C505	UR837470	C.EL	47uF 16V	
C506	UR837470	C.EL	47uF 16V	BG
C507	UR837470	C.EL	47uF 16V	BG
C508	VF466800	C.CE.TUBLR	100pF 50V	
C509	VG279400	C.CE.TUBLR	2200pF 16V	
C510	VF467300	C.CE.TUBLR	0.01uF 16V	
C511	VF467300	C.CE.TUBLR	0.01uF 16V	
C512	VF467000	C.CE.TUBLR	1000pF 50V	
C513	VF467300	C.CE.TUBLR	0.01uF 16V	
C514	UR837470	C.EL	47uF 16V	BG
C515	UR866220	C.EL	2.2uF 50V	
C651	VJ599100	C.CE.TUBLR	0.1uF 50V	
C652	VJ599100	C.CE.TUBLR	0.1uF 50V	
D371	VM976300	DIODE.ZENR	HZS242TD 24V	
D372	VM976300	DIODE.ZENR	HZS242TD 24V	
⚠ D401	VQ379300	DIODE.BRG	S1VB20 1.0A 200V	
⚠ D402	VQ379300	DIODE.BRG	S1VB20 1.0A 200V	
⚠ D403	VQ379300	DIODE.BRG	S1VB20 1.0A 200V	
D441	VD631600	DIODE	1SS133,176	
D442	VM975300	DIODE.ZENR	HZS11B2TD 11V	
D443	VM975300	DIODE.ZENR	HZS11B2TD 11V	
D444	VM975300	DIODE.ZENR	HZS11B2TD 11V	
D445	VM975300	DIODE.ZENR	HZS11B2TD 11V	
D446	VG437700	DIODE.ZENR	MTZJ5.6B 5.6V	
D447	VD631600	DIODE	1SS133,176	
D448	VD631600	DIODE	1SS133,176	
IC301	XH436A00	IC	LA7956	
IC302	XH436A00	IC	LA7956	
IC351	XH436A00	IC	LA7956	
⚠ IC371	XJ608A00	IC	NJM7812FA	
⚠ IC372	XD343A00	IC	NJM79M12FA	
⚠ IC373	XJ608A00	IC	NJM7812FA	
⚠ IC374	XJ607A00	IC	NJM7805FA 5V	
IC441	XP894A00	IC	LC78211	
IC442	XP896A00	IC	LC78213	
IC443	XP895A00	IC	LC78212	
IC444	XB247A00	IC	uPC4570HA	
IC445	XY534A00	IC	LC72722	BG
IC446	iG092000	IC	M5220L	
IC447	iG092000	IC	M5220L	
JK301	VP113600	CN.DIN	2P	
JK302	VP113600	CN.DIN	2P	

* New Parts

Schm Ref.	PART NO.	Description		Markets
JK303	VU245200	CN.DIN	1P	
L441	Vi546100	COIL	220uH	BG
* PJ351	V7189800	JACK.PIN	1P	
* PJ352	V7190000	JACK.PIN	2P	
* PJ353	V7190000	JACK.PIN	2P	
* PJ421	V7190400	JACK.PIN	6P	
* PJ441	V7046700	JACK.PIN	MSP-244V1-01NI	
* PJ442	V7046800	JACK.PIN	MSP-246V1-01NI	
* PJ443	V7046800	JACK.PIN	MSP-246V1-01NI	
* PJ444	V7189700	JACK.PIN	1P	
PN441	V3750200	PIN	L=70	
PN442	V3750200	PIN	L=70	
Q301	iC1815I0	TR	2SC1815 Y	
Q302	iC1815I0	TR	2SC1815 Y	
Q303	iC1815I0	TR	2SC1815 Y	
Q304	iC1815I0	TR	2SC1815 Y	
Q305	iC174020	TR	2SC1740S R,S	
Q306	iC174020	TR	2SC1740S R,S	
Q351	iC1815I0	TR	2SC1815 Y	
Q352	iC1815I0	TR	2SC1815 Y	
Q353	iC174020	TR	2SC1740S R,S	
Q371	VP872700	TR	2SC4488 S,T	
Q372	VP872600	TR	2SA1708 S,T	
Q441	iC287820	TR	2SC2878 A,B	
Q442	iC287820	TR	2SC2878 A,B	
Q443	iC287820	TR	2SC2878 A,B	
Q444	iC287820	TR	2SC2878 A,B	
Q445	iC287820	TR	2SC2878 A,B	
Q446	iC287820	TR	2SC2878 A,B	
Q447	iC287820	TR	2SC2878 A,B	
Q448	iC287820	TR	2SC2878 A,B	
Q449	iC287820	TR	2SC2878 A,B	
Q450	iC287820	TR	2SC2878 A,B	
Q451	iC287820	TR	2SC2878 A,B	
Q452	iC287820	TR	2SC2878 A,B	
Q453	iC287820	TR	2SC2878 A,B	
Q454	iC287820	TR	2SC2878 A,B	
Q455	iC287820	TR	2SC2878 A,B	
Q456	iC287820	TR	2SC2878 A,B	
Q457	VG721700	TR.DGT	DTA144ES	
Q458	VG721700	TR.DGT	DTA144ES	
Q459	VG721700	TR.DGT	DTA144ES	
Q460	VG721700	TR.DGT	DTA144ES	
Q461	iC1815I0	TR	2SC1815 Y	
Q462	iC174020	TR	2SC1740S R,S	BG
Q465	VG721700	TR.DGT	DTA144ES	
Q466	iC287820	TR	2SC2878 A,B	
Q467	iC287820	TR	2SC2878 A,B	
Q468	iC287820	TR	2SC2878 A,B	
Q469	VG721700	TR.DGT	DTA144ES	
R326	HV753220	R.CAR.FP	2.2Ω 1/4W	
R363	HV753220	R.CAR.FP	2.2Ω 1/4W	
R371	VS267200	R.MTL.OXD	82Ω 1W	
R376	VS267200	R.MTL.OXD	82Ω 1W	
R377	HV753100	R.CAR.FP	1Ω 1/4W	
R378	HV753100	R.CAR.FP	1Ω 1/4W	
R379	HV753100	R.CAR.FP	1Ω 1/4W	
R380	VP939600	R.MTL.FLM	2.2Ω 1W	
R401	HV753100	R.CAR.FP	1Ω 1/4W	
R402	HV753100	R.CAR.FP	1Ω 1/4W	
R490	HV753220	R.CAR.FP	2.2Ω 1/4W	
R497	HV753220	R.CAR.FP	2.2Ω 1/4W	
R535	HV753220	R.CAR.FP	2.2Ω 1/4W	

* New Parts

P.C.B. INPUT & P.C.B. OPERATION

Schm Ref.	PART NO.	Description			Markets
R536	HV753220	R.CAR.FP	2.2Ω	1/4W	
R537	HV753220	R.CAR.FP	2.2Ω	1/4W	
R540	HV753220	R.CAR.FP	2.2Ω	1/4W	
R600	HV753220	R.CAR.FP	2.2Ω	1/4W	
SW351	V3624300	SW.SLIDE	SS029-P022MJB-PA6		RT
XL441	V3930900	RSNR.CRYS	4.332MHz		BG
* * * *	V7260100	P.C.B.	OPERATION		UC
	V7260200	P.C.B.	OPERATION		RT
	V7260300	P.C.B.	OPERATION		AL
	V7260400	P.C.B.	OPERATION		BG
CB661	VP798200	CN.BS.PIN	24P		
CB662	VQ961600	CN	13P		
CB663	VQ961700	CN.BS.PIN	14P		
CB731	VQ045300	CN.BS.PIN	23P		
CB811	Vi878200	CN.BS.PIN	4P		
CB812	Vi878000	CN.BS.PIN	2P		
CB813	Vi878000	CN.BS.PIN	2P		
CB831	V5478200	CN.PHOT.SN	1P GP1FA551RZ		
CB833	VQ044300	CN.BS.PIN	7P		
CB834	Vi878200	CN.BS.PIN	4P		
CB901	VU273700	CN	37P TE		
CB903	Vi878000	CN.BS.PIN	2P		
CB904	Vi878000	CN.BS.PIN	2P		
CB905	Vi878200	CN.BS.PIN	4P		
CB906	VU270800	CN	8P		
CB907	Vi878900	CN.BS.PIN	11P		
C661	UR877470	C.EL	47uF	63V	
C662	UR877100	C.EL	10uF	63V	
C663	VG278400	C.CE.TUBLR	220pF	50V	
C664	VG278400	C.CE.TUBLR	220pF	50V	
C665	UR847100	C.EL	10uF	25V	
C666	UR847100	C.EL	10uF	25V	
C667	UR847100	C.EL	10uF	25V	
C668	UR847100	C.EL	10uF	25V	
C669	UR847100	C.EL	10uF	25V	
C670	UR847100	C.EL	10uF	25V	
C671	UR837470	C.EL	47uF	16V	
C672	UR847100	C.EL	10uF	25V	
C673	UA652220	C.MYLAR	220pF	50V	
C674	UR838100	C.EL	100uF	16V	
C675	VQ645600	C.MYLAR	100pF	50V	
C676	UA653100	C.MYLAR	1000pF	50V	
C677	UA652220	C.MYLAR	220pF	50V	
C678	UR838100	C.EL	100uF	16V	
C679	VQ645600	C.MYLAR	100pF	50V	
C680	UA653100	C.MYLAR	1000pF	50V	
C681	UA652220	C.MYLAR	220pF	50V	
C682	UA652470	C.MYLAR	470pF	50V	
C683	UA652220	C.MYLAR	220pF	50V	
C684	UA652470	C.MYLAR	470pF	50V	
C685	UA652220	C.MYLAR	220pF	50V	
C686	UR837470	C.EL	47uF	16V	
C687	UA652100	C.MYLAR	100pF	50V	
C688	UA653100	C.MYLAR	1000pF	50V	
C689	VQ245400	C.PP	33pF	200V	
C690	VQ245400	C.PP	33pF	200V	
C691	VS696700	C.CE	33pF	500V	
C692	UR837470	C.EL	47uF	16V	
C693	UA653100	C.MYLAR	1000pF	50V	
C694	VS696700	C.CE	33pF	500V	

* New Parts

Schm Ref.	PART NO.	Description			Markets
C695	UR837470	C.EL	47uF	16V	
C696	UA653100	C.MYLAR	1000pF	50V	
C697	VQ245400	C.PP	33pF	200V	
C731	UA652100	C.MYLAR	100pF	50V	
C732	UA652100	C.MYLAR	100pF	50V	
C733	UR866220	C.EL	2.2uF	50V	
C734	UR828100	C.EL	100uF	10V	
C735	UR828100	C.EL	100uF	10V	
C736	UR866220	C.EL	2.2uF	50V	
C737	UR866220	C.EL	2.2uF	50V	
C738	UR828100	C.EL	100uF	10V	
C739	UR828100	C.EL	100uF	10V	
C740	UR866220	C.EL	2.2uF	50V	
C741	UR866220	C.EL	2.2uF	50V	
C742	UR828100	C.EL	100uF	10V	
C743	UR828100	C.EL	100uF	10V	
C744	UR866220	C.EL	2.2uF	50V	
C745	UN866100	C.EL	1uF	50V	
C746	VJ599100	C.CE.TUBLR	0.1uF	50V	
C747	UA653100	C.MYLAR	1000pF	50V	
C748	UA653100	C.MYLAR	1000pF	50V	
C749	UR866330	C.EL	3.3uF	50V	
C750	VG287600	C.EL	100uF	25V	
C751	UA652100	C.MYLAR	100pF	50V	
C752	UA652100	C.MYLAR	100pF	50V	
C753	VG287600	C.EL	100uF	25V	
C754	UR866330	C.EL	3.3uF	50V	
C755	UR866330	C.EL	3.3uF	50V	
C756	UA652100	C.MYLAR	100pF	50V	
C757	UA652100	C.MYLAR	100pF	50V	
C758	UR866330	C.EL	3.3uF	50V	
C771	UR866100	C.EL	1uF	50V	
C772	UR866220	C.EL	2.2uF	50V	
C773	UR838330	C.EL	330uF	16V	
C774	UR838330	C.EL	330uF	16V	
C775	UR866220	C.EL	2.2uF	50V	
C776	UR866100	C.EL	1uF	50V	
C777	UR837470	C.EL	47uF	16V	
C778	UA655120	C.MYLAR	0.12uF	50V	
C779	VK533800	C.PP	47pF	200V	
C780	UA654330	C.MYLAR	0.033uF	50V	
C781	VK533800	C.PP	47pF	200V	
C782	UA654330	C.MYLAR	0.033uF	50V	
C783	UA655120	C.MYLAR	0.12uF	50V	
C784	UR837470	C.EL	47uF	16V	
C785	UR847100	C.EL	10uF	25V	
C786	UR847100	C.EL	10uF	25V	
C787	VQ645600	C.MYLAR	100pF	50V	
C788	VQ645600	C.MYLAR	100pF	50V	
C789	UR866330	C.EL	3.3uF	50V	
C790	UR866330	C.EL	3.3uF	50V	
C831	VJ599100	C.CE.TUBLR	0.1uF	50V	
C832	VJ599100	C.CE.TUBLR	0.1uF	50V	
C833	VF466800	C.CE.TUBLR	100pF	50V	
C834	VF466800	C.CE.TUBLR	100pF	50V	
C835	VF467300	C.CE.TUBLR	0.01uF	16V	RTALBG
C836	VF467000	C.CE.TUBLR	1000pF	50V	
C837	VJ599100	C.CE.TUBLR	0.1uF	50V	
C838	VJ599100	C.CE.TUBLR	0.1uF	50V	
C839	UA654100	C.MYLAR	0.01uF	50V	RTALBG
C840	UA654100	C.MYLAR	0.01uF	50V	RTALBG
C901	VG276600	C.CE.TUBLR	22pF	50V	
C902	VJ599100	C.CE.TUBLR	0.1uF	50V	

* New Parts

P.C.B. OPERATION & P.C.B. DSP

	Schm Ref.	PART NO.	Description		Markets
	C903	VJ599100	C.CE.TUBLR	0.1uF 50V	
	C904	UR819100	C.EL	1000uF 6.3V	
	C905	UR819100	C.EL	1000uF 6.3V	
	C906	UM397100	C.EL	10uF 16V	
	C907	UM416100	C.EL	1uF 50V	
	C908	VU545000	C.EL	47000uF 5.5V	
	C909	VJ599100	C.CE.TUBLR	0.1uF 50V	
	C910	UM407100	C.EL	10uF 50V	
	C911	VJ599100	C.CE.TUBLR	0.1uF 50V	
	C912	UR847470	C.EL	47uF 25V	
	D661	VM976000	DIODE.ZENR	HZS182TD 18V	UC
	D661	VM976100	DIODE.ZENR	HZS202TD 20V	RTALBG
	D662	VP914500	DIODE.ZENR	HZS223TD 22V	UC
	D662	VP976300	DIODE.ZENR	HZS242TD 24V	RTALBG
	D663	VM975700	DIODE.ZENR	HZS12C2TD 12V	
	D664	VD631600	DIODE	1SS133,176	
	D665	VD631600	DIODE	1SS133,176	
	D731	VM974200	DIODE.ZENR	HZS5C2TD 5.0V	
	D901	VD631600	DIODE	1SS133,176	
	D902	VD631600	DIODE	1SS133,176	
	D903	VM974100	DIODE.ZENR	HZS5B2TD 5.0V	
	D904	VM974100	DIODE.ZENR	HZS5B2TD 5.0V	
	D905	VD631600	DIODE	1SS133,176	
	D906	VD631600	DIODE	1SS133,176	
	D907	VD631600	DIODE	1SS133,176	
	D908	VD631600	DIODE	1SS133,176	
	D909	VM974700	DIODE.ZENR	HZS7B2TD 7.0V	
	D910	VD631600	DIODE	1SS133,176	
	D911	VM974400	DIODE.ZENR	HZS6B2TD 6.0V	RT
	D911	VM974600	DIODE.ZENR	HZS7A2TD 7.0V	UCALBG
	D912	VD631600	DIODE	1SS133,176	
	IC731	XC520A00	IC	uPC4570C	
	IC732	XC520A00	IC	uPC4570C	
	IC733	XC520A00	IC	uPC4570C	
	IC734	XF494A00	IC	LB1641	
	IC771	XM356A00	IC	NJM2068LD	
	IC772	XM356A00	IC	NJM2068LD	
*	IC901	XZ615A00	IC	LC75725E	
*	IC902	XZ773B00	IC.CPU	UPD784216AGF-510	
	IC903	XJ757A00	IC	NJM78L05A-T3	
	JK831	V2982900	CN	1P	
*	JK832	V7033500	JACK.PHONE	YKB21-5321	
	L831	GE901970	COIL	68uH	
*	PJ831	V7440100	JACK.PIN	MSP-253V-06 NI	
	PN671	V3750200	PIN	L=70	
	PN901	V3750200	PIN	L=70	
	PN902	V3750200	PIN	L=70	
	Q661	VS883300	TR	2SB1565 E,F	
	Q662	VP883100	TR	2SC1890A D,E	UCRTALBG
	Q663	VP883100	TR	2SC1890A D,E	
	Q664	VP872700	TR	2SC4488 S,T	
	Q665	VP883000	TR	2SA893A D,E	
	Q666	VP883000	TR	2SA893A D,E	
	Q667	VP883000	TR	2SA893A D,E	
	Q668	VP883000	TR	2SA893A D,E	
	Q669	VP883000	TR	2SA893A D,E	
	Q670	VP883000	TR	2SA893A D,E	
	Q671	VP883000	TR	2SA893A D,E	
	Q672	VP883000	TR	2SA893A D,E	
	Q673	VP883000	TR	2SA893A D,E	
	Q674	VP883000	TR	2SA893A D,E	
⚠	Q675	VR325600	TR	2SC2229 O,Y	
⚠	Q676	VR325600	TR	2SC2229 O,Y	

✻ New Parts

	Schm Ref.	PART NO.	Description		Markets
⚠	Q677	VR325600	TR	2SC2229 O,Y	
⚠	Q678	VR325600	TR	2SC2229 O,Y	
⚠	Q679	VR325600	TR	2SC2229 O,Y	
	Q901	VV900500	TR	2SD1991A Q,R,S	
	Q902	VV900500	TR	2SD1991A Q,R,S	
	Q903	VV900500	TR	2SD1991A Q,R,S	
	Q904	VV900500	TR	2SD1991A Q,R,S	
	Q906	VV900500	TR	2SD1991A Q,R,S	
	Q907	VV900500	TR	2SD1991A Q,R,S	
	Q909	VG722000	TR.DGT	DTC144ES	
	Q910	iA093320	TR	2SA933S Q,R	
	Q911	iA093320	TR	2SA933S Q,R	
	Q912	iA093320	TR	2SA933S Q,R	
	R663	HV753100	R.CAR.FP	1Ω 1/4W	
	R664	HV756330	R.CAR.FP	3.3KΩ 1/4W	
	R670	HV756180	R.CAR.FP	1.8KΩ 1/4W	
	R671	HV756820	R.CAR.FP	8.2KΩ 1/4W	
⚠	R709	HV754470	R.CAR.FP	47Ω 1/4W	
⚠	R711	HV754470	R.CAR.FP	47Ω 1/4W	
⚠	R715	HV754470	R.CAR.FP	47Ω 1/4W	
⚠	R719	HV754470	R.CAR.FP	47Ω 1/4W	
⚠	R721	HV754470	R.CAR.FP	47Ω 1/4W	
	R733	HV754100	R.CAR.FP	10Ω 1/4W	
	R734	HV754100	R.CAR.FP	10Ω 1/4W	
	R765	HV753680	R.CAR.FP	6.8Ω 1/4W	
	R771	VP939800	R.MTL.OXD	10Ω 1W	
	R772	VP939800	R.MTL.OXD	10Ω 1W	
	R999	VP939700	R.MTL.FLM	4.7Ω 1W	
	ST661	V4040500	SCR.TERM	M3	
	ST771	V4040500	SCR.TERM	M3	
	SW811	VG392900	SW.TACT	SKHVAA	
	SW812	VG392900	SW.TACT	SKHVAA	
	SW813	VG392900	SW.TACT	SKHVAA	
	SW814	VG392900	SW.TACT	SKHVAA	
	SW815	VG392900	SW.TACT	SKHVAA	
	SW816	VG392900	SW.TACT	SKHVAA	
	SW817	VG392900	SW.TACT	SKHVAA	
	SW818	VG392900	SW.TACT	SKHVAA	
	SW819	VG392900	SW.TACT	SKHVAA	
	SW820	VG392900	SW.TACT	SKHVAA	
	SW821	VG392900	SW.TACT	SKHVAA	
	SW822	VG392900	SW.TACT	SKHVAA	
	SW823	VG392900	SW.TACT	SKHVAA	
	SW824	VG392900	SW.TACT	SKHVAA	
	SW825	VG392900	SW.TACT	SKHVAA	
	SW901	VG392900	SW.TACT	SKHVAA	BG
	SW902	VG392900	SW.TACT	SKHVAA	BG
	SW903	VG392900	SW.TACT	SKHVAA	BG
	SW904	VG392900	SW.TACT	SKHVAA	BG
	U901	VU591000	L.DTCT	GP1U271X	
*	V901	V6840400	FL.DSPLY	10-BT-235GNK	
	VR731	VV613500	VR	A100KΩ	
	VR771	V7455900	VR	B 20K RK14K1240	
	VR772	V7456000	VR	W 25K RK14K1240	
	VR773	V7455800	VR	MN 100.0K RK14K124	
*	XL901	V7718300	RSNR.CE	10MHz	
		V5289500	SHEET		
		V6007100	SPACER	4.6/10/32	
*		V6865600	PLATE.GND		
*		V7261200	P.C.B.	DSP	

✻ New Parts

P.C.B. DSP

Schm Ref.	PART NO.	Description			Markets
CB801	V6022800	CN.FBRLINK	1P GP1FA551TZ		
CB802	V5478200	CN.PHOT.SN	1P GP1FA551RZ		
CB803	V5478200	CN.PHOT.SN	1P GP1FA551RZ		
CB804	V5478200	CN.PHOT.SN	1P GP1FA551RZ		
CB807	VQ045600	CN.BS.PIN	27P		
C801	US135100	C.CE.CHP	0.1uF	16V	
C802	US135100	C.CE.CHP	0.1uF	16V	
C803	US135100	C.CE.CHP	0.1uF	16V	
C804	US135100	C.CE.CHP	0.1uF	16V	
C806	US061220	C.CE.M.CHP	22pF	50V	
C807	US135100	C.CE.CHP	0.1uF	16V	
C808	UR847100	C.EL	10uF	25V	
C809	US135100	C.CE.CHP	0.1uF	16V	
C810	US135100	C.CE.CHP	0.1uF	16V	
C811	UR847220	C.EL	22uF	25V	
C812	US135100	C.CE.CHP	0.1uF	16V	
C813	US044220	C.CE.M.CHP	0.022uF	25V	
C814	US061330	C.CE.M.CHP	33pF	50V	
C815	US063100	C.CE.M.CHP	1000pF	50V	
C816	US062220	C.CE.CHP	220pF	50V	
C817	US061100	C.CE.M.CHP	10pF	50V	
C818	US063100	C.CE.M.CHP	1000pF	50V	
C819	US135100	C.CE.CHP	0.1uF	16V	
C820	UR819100	C.EL	1000uF	6.3V	
C821	UR819100	C.EL	1000uF	6.3V	
C822	US135100	C.CE.CHP	0.1uF	16V	
C823	US135100	C.CE.CHP	0.1uF	16V	
C824	US135100	C.CE.CHP	0.1uF	16V	
C825	US061100	C.CE.M.CHP	10pF	50V	
C826	US135100	C.CE.CHP	0.1uF	16V	
C827	US135100	C.CE.CHP	0.1uF	16V	
C828	US135100	C.CE.CHP	0.1uF	16V	
C829	US135100	C.CE.CHP	0.1uF	16V	
C830	UR819100	C.EL	1000uF	6.3V	
C831	UR818100	C.EL	100uF	6.3V	
C832	US135100	C.CE.CHP	0.1uF	16V	
C833	UR819100	C.EL	1000uF	6.3V	
C834	UR818100	C.EL	100uF	6.3V	
C835	US135100	C.CE.CHP	0.1uF	16V	
C836	US135100	C.CE.CHP	0.1uF	16V	
C837	US135100	C.CE.CHP	0.1uF	16V	
C838	US061330	C.CE.M.CHP	33pF	50V	
C839	US135100	C.CE.CHP	0.1uF	16V	
C840	UR819100	C.EL	1000uF	6.3V	
C841	US135100	C.CE.CHP	0.1uF	16V	
C842	UR819100	C.EL	1000uF	6.3V	
C843	US061330	C.CE.M.CHP	33pF	50V	
C844	US135100	C.CE.CHP	0.1uF	16V	
C845	US061470	C.CE.M.CHP	47pF	50V	
C846	US061470	C.CE.M.CHP	47pF	50V	
C847	US061470	C.CE.M.CHP	47pF	50V	
C848	US061470	C.CE.M.CHP	47pF	50V	
C849	US061470	C.CE.M.CHP	47pF	50V	
C850	US061470	C.CE.M.CHP	47pF	50V	
C851	US061470	C.CE.M.CHP	47pF	50V	
C852	US061470	C.CE.M.CHP	47pF	50V	
C853	US061470	C.CE.M.CHP	47pF	50V	
C854	US061470	C.CE.M.CHP	47pF	50V	
C855	UR818100	C.EL	100uF	6.3V	
C856	US135100	C.CE.CHP	0.1uF	16V	
C857	US135100	C.CE.CHP	0.1uF	16V	
C858	US063470	C.CE.CHP	4700pF	50V	
C859	US135100	C.CE.CHP	0.1uF	16V	

✻ New Parts

Schm Ref.	PART NO.	Description			Markets
C860	US062470	C.CE.M.CHP	470pF	50V	
C861	UR818100	C.EL	100uF	6.3V	
C862	US063470	C.CE.CHP	4700pF	50V	
C863	US135100	C.CE.CHP	0.1uF	16V	
C864	US135100	C.CE.CHP	0.1uF	16V	
C865	UR818100	C.EL	100uF	6.3V	
C866	US135100	C.CE.CHP	0.1uF	16V	
C867	US135100	C.CE.CHP	0.1uF	16V	
C868	US145100	C.CE.CHP	0.1uF	25V	✻
C869	US145100	C.CE.CHP	0.1uF	25V	✻
C870	US061470	C.CE.M.CHP	47pF	50V	
C871	US061470	C.CE.M.CHP	47pF	50V	
C872	US061470	C.CE.M.CHP	47pF	50V	
C873	US061470	C.CE.M.CHP	47pF	50V	
C874	US061470	C.CE.M.CHP	47pF	50V	
C875	US061470	C.CE.M.CHP	47pF	50V	
C876	US061470	C.CE.M.CHP	47pF	50V	
C877	US061470	C.CE.M.CHP	47pF	50V	
C878	US061470	C.CE.M.CHP	47pF	50V	
C879	US135100	C.CE.CHP	0.1uF	16V	
C880	UR819100	C.EL	1000uF	6.3V	
C881	US135100	C.CE.CHP	0.1uF	16V	
C882	US135100	C.CE.CHP	0.1uF	16V	
C883	US135100	C.CE.CHP	0.1uF	16V	
C884	US135100	C.CE.CHP	0.1uF	16V	
C885	US135100	C.CE.CHP	0.1uF	16V	
C886	UR818100	C.EL	100uF	6.3V	
C887	UR818100	C.EL	100uF	6.3V	
C890	US135100	C.CE.CHP	0.1uF	16V	
C891	UR847100	C.EL	10uF	25V	
C894	US135100	C.CE.CHP	0.1uF	16V	
C901	UR828100	C.EL	100uF	10V	
C902	UA653150	C.MYLAR	1500pF	50V	
C903	UA653150	C.MYLAR	1500pF	50V	
C912	UR847100	C.EL	10uF	25V	
C913	US135100	C.CE.CHP	0.1uF	16V	
C914	US135100	C.CE.CHP	0.1uF	16V	
C915	UR847100	C.EL	10uF	25V	
C921	UA652100	C.MYLAR	100pF	50V	
C922	UA652100	C.MYLAR	100pF	50V	
C923	UR847100	C.EL	10uF	25V	
C924	US063470	C.CE.CHP	4700pF	50V	
C925	UR847100	C.EL	10uF	25V	
C926	UR847100	C.EL	10uF	25V	
C927	UR847100	C.EL	10uF	25V	
C928	UR847100	C.EL	10uF	25V	
C929	UR847100	C.EL	10uF	25V	
C930	UR847470	C.EL	47uF	25V	
C931	UR847470	C.EL	47uF	25V	
C932	UA652100	C.MYLAR	100pF	50V	
C933	UR837220	C.EL	22uF	16V	
C934	UR847100	C.EL	10uF	25V	
C935	US135100	C.CE.CHP	0.1uF	16V	
C936	UR837220	C.EL	22uF	16V	
C937	UA652100	C.MYLAR	100pF	50V	
C938	UR847100	C.EL	10uF	25V	
C939	UA652100	C.MYLAR	100pF	50V	
C940	UA652100	C.MYLAR	100pF	50V	
C941	UR847100	C.EL	10uF	25V	
C942	UR847100	C.EL	10uF	25V	
C943	UR847470	C.EL	47uF	25V	
C944	UA652100	C.MYLAR	100pF	50V	
C945	UA652100	C.MYLAR	100pF	50V	

✻ New Parts

P.C.B. DSP & P.C.B. MAIN

Schm Ref.	PART NO.	Description			Markets
C946	UR847470	C.EL	47uF	25V	
C947	UR847100	C.EL	10uF	25V	
C948	UR847100	C.EL	10uF	25V	
C949	UA652100	C.MYLAR	100pF	50V	
C950	UA652100	C.MYLAR	100pF	50V	
C951	UR847100	C.EL	10uF	25V	
* C952	US145100	C.CE.CHP	0.1uF	25V	
* C953	US145100	C.CE.CHP	0.1uF	25V	
* C954	US145100	C.CE.CHP	0.1uF	25V	
* C955	US145100	C.CE.CHP	0.1uF	25V	
C960	US062100	C.CE.M.CHP	100pF	50V	
C961	US135100	C.CE.CHP	0.1uF	16V	
C962	US135100	C.CE.CHP	0.1uF	16V	
C963	US062560	C.CE.CHP	560pF	50V	
C969	US135100	C.CE.CHP	0.1uF	16V	
C970	UR819100	C.EL	1000uF	6.3V	
C971	UR828100	C.EL	100uF	10V	
C972	UR828100	C.EL	100uF	10V	
C973	VG278800	C.CE.TUBLR	560pF	50V	
D801	VT332900	DIODE	1SS355		
D802	VT332900	DIODE	1SS355		
D803	VT332900	DIODE	1SS355		
D804	VV220700	DIODE.SHOT	RB501V-40		
D805	VV220700	DIODE.SHOT	RB501V-40		
D806	VT332900	DIODE	1SS355		
D807	VT332900	DIODE	1SS355		
D808	VT332900	DIODE	1SS355		
D817	VT332900	DIODE	1SS355		
D818	VT332900	DIODE	1SS355		
D819	VT332900	DIODE	1SS355		
D820	VT332900	DIODE	1SS355		
D823	VV220700	DIODE.SHOT	RB501V-40		
D824	VV220700	DIODE.SHOT	RB501V-40		
D825	VV220700	DIODE.SHOT	RB501V-40		
D826	VV220700	DIODE.SHOT	RB501V-40		
D827	VV220700	DIODE.SHOT	RB501V-40		
D828	VV220700	DIODE.SHOT	RB501V-40		
D829	VV220700	DIODE.SHOT	RB501V-40		
D830	VV220700	DIODE.SHOT	RB501V-40		
D832	VT332900	DIODE	1SS355		
G801	VR463400	TERM.GND	D3.5		
G802	VR463400	TERM.GND	D3.5		
G803	VR463400	TERM.GND	D3.5		
G804	VR463400	TERM.GND	D3.5		
IC801	XY580A00	IC	YSS928		
IC802	XV077A00	IC	MSM514260C-60JS		
IC803	XZ003A00	IC	PQ025EZ5MZP 2.5V		
IC804	XU965A00	IC	uPC29M33T-E1 3.3V		
IC805	XD655A00	IC	TC74HC00AF NAND		
IC806	XV495A00	IC	TC74VHCT08AF AND		
IC807	XR038A00	IC	NJM2904M OP AMP		
IC808	XD660A00	IC	TC74HCU04AF-TP1		
IC812	XZ002A00	IC	AK4527VQ		
IC813	XV039A00	IC	M5220FP OP AMP		
IC814	XV039A00	IC	M5220FP OP AMP		
IC815	XV039A00	IC	M5220FP OP AMP		
IC816	XV039A00	IC	M5220FP OP AMP		
IC817	XV039A00	IC	M5220FP OP AMP		
L801	V2726500	COIL	68uH		
L802	V2726500	COIL	68uH		
L803	V2726500	COIL	68uH		
PJ801	V4483900	JACK.PIN	YKC21-3895		
Q801	VC124000	TR.DGT	DTA144EK		

* New Parts

Schm Ref.	PART NO.	Description			Markets
Q807	VC124000	TR.DGT	DTA144EK		
Q808	VC124000	TR.DGT	DTA144EK		
Q815	VD303700	TR	2SC3326 A,B		
Q816	VD303700	TR	2SC3326 A,B		
Q817	VD303700	TR	2SC3326 A,B		
Q818	VD303700	TR	2SC3326 A,B		
Q819	VC124000	TR.DGT	DTA144EK		
Q820	VC124000	TR.DGT	DTA144EK		
Q821	VD303700	TR	2SC3326 A,B		
Q822	VD303700	TR	2SC3326 A,B		
Q823	VD303700	TR	2SC3326 A,B		
Q824	VD303700	TR	2SC3326 A,B		
R842	HV753100	R.CAR.FP	1Ω	1/4W	
R843	HV753100	R.CAR.FP	1Ω	1/4W	
R844	VU224000	R.MTL.FLM	0.22Ω	1W J	
R845	HV753220	R.CAR.FP	2.2Ω	1/4W	
R847	HV753220	R.CAR.FP	2.2Ω	1/4W	
R849	HV754100	R.CAR.FP	10Ω	1/4W	
R970	HV753220	R.CAR.FP	2.2Ω	1/4W	
XL801	V3625700	RSNR.CRYS	24.576MHz		
*	V7262300	P.C.B.	MAIN		UC
*	V7262400	P.C.B.	MAIN		RT
*	V7262500	P.C.B.	MAIN		A
*	V7262600	P.C.B.	MAIN		B
*	V7262700	P.C.B.	MAIN		G
*	V7262800	P.C.B.	MAIN		L
CB1	VQ963500	CN.BS.PIN	14P		
CB2	VQ585100	CN.BS.PIN	9P		
CB3	VK025500	CN.BS.PIN	11P		
CB4	Vi878200	CN.BS.PIN	4P		
CB5	VK024800	CN.BS.PIN	4P		
CB6	Vi878100	CN.BS.PIN	3P		
CB161	Vi878200	CN.BS.PIN	4P		
CB162	Vi878800	CN.BS.PIN	10P		
CB163	VP206500	HOLDER.FUS	EYF-52BCT		UCG
CB164	VP206500	HOLDER.FUS	EYF-52BCT		UCG
CB165	VP206500	HOLDER.FUS	EYF-52BCT		
CB166	VP206500	HOLDER.FUS	EYF-52BCT		
CB167	VG879900	CN.BS.PIN	2P		
CB201	VQ585100	CN.BS.PIN	9P		
CB202	VQ585000	CN.BS.PIN	8P		
CB221	Vi878100	CN.BS.PIN	3P		
CB222	Vi878800	CN.BS.PIN	10P		
CB241	VQ585000	CN.BS.PIN	8P		
CB271	VP206500	HOLDER.FUS	EYF-52BCT		RT
CB272	VP206500	HOLDER.FUS	EYF-52BCT		RT
C1	UR867470	C.EL	47uF	50V	
C2	UR867470	C.EL	47uF	50V	
C3	UR867470	C.EL	47uF	50V	
C4	VR325000	C.MYLAR	100pF	100V	
C5	VK399200	C.MYLAR.ML	0.39uF	50V	
C6	UR867470	C.EL	47uF	50V	
C7	VR325000	C.MYLAR	100pF	100V	
C8	VR325000	C.MYLAR	100pF	100V	
C9	UR867470	C.EL	47uF	50V	
C10	VK399200	C.MYLAR.ML	0.39uF	50V	
C11	UR867470	C.EL	47uF	50V	
C12	VR325000	C.MYLAR	100pF	100V	
C13	VR325000	C.MYLAR	100pF	100V	
C14	UR867470	C.EL	47uF	50V	

* New Parts

P.C.B. MAIN

Schm Ref.	PART NO.	Description			Markets
C15	VR325000	C.MYLAR	100pF	100V	
C16	VR325000	C.MYLAR	100pF	100V	
C17	UR867470	C.EL	47uF	50V	
C18	VR325000	C.MYLAR	100pF	100V	
C19	VR325000	C.MYLAR	100pF	100V	
C20	UR867470	C.EL	47uF	50V	
C21	UR867470	C.EL	47uF	50V	
C22	VR325000	C.MYLAR	100pF	100V	
C23	UA654680	C.MYLAR	0.068uF	50V	
C24	UA654680	C.MYLAR	0.068uF	50V	
C25	UA654680	C.MYLAR	0.068uF	50V	
C26	UA654680	C.MYLAR	0.068uF	50V	
C27	UA654680	C.MYLAR	0.068uF	50V	
C28	VR325100	C.MYLAR	0.01uF	100V	
C29	UR866470	C.EL	4.7uF	50V	
C30	VR325100	C.MYLAR	0.01uF	100V	
C31	VR325100	C.MYLAR	0.01uF	100V	
C32	VR325100	C.MYLAR	0.01uF	100V	
C33	UR877100	C.EL	10uF	63V	
C34	UR877100	C.EL	10uF	63V	
C35	UR837470	C.EL	47uF	16V	
C36	UR867470	C.EL	47uF	50V	
C37	UR866470	C.EL	4.7uF	50V	
C38	UA654220	C.MYLAR	0.022uF	50V	ALBG
C40	UR837470	C.EL	47uF	16V	
C41	UA654100	C.MYLAR	0.01uF	50V	ALBG
C42	UA654100	C.MYLAR	0.01uF	50V	ALBG
C43	UA654100	C.MYLAR	0.01uF	50V	ALBG
C44	UA654220	C.MYLAR	0.022uF	50V	ALBG
C161	VJ599100	C.CE.TUBLR	0.1uF	50V	
⚠ C162	UR848220	C.EL	220uF	25V	RT
C162	UR848470	C.EL	470uF	25V	UCALBG
⚠ C163	V4926300	C.EL	8200uF	63V	
⚠ C164	V4926300	C.EL	8200uF	63V	
C165	FG613100	C.CE	1000pF	50V	RT
C166	UR837100	C.EL	10uF	16V	RT
⚠ C167	Vi716700	C.MYLAR	0.01uF	50V	
C168	VJ599100	C.CE.TUBLR	0.1uF	50V	
C169	VS745400	C.POL.MTL	0.1uF	100V	
C170	VS745400	C.POL.MTL	0.1uF	100V	
C171	UA654100	C.MYLAR	0.01uF	50V	
⚠ C172	V6185300	C.CE.SAFTY	0.01uF	275V	
C173	VJ599100	C.CE.TUBLR	0.1uF	50V	
⚠ C174	UR897100	C.EL	10uF	100V	RT
C201	UA654100	C.MYLAR	0.01uF	50V	GL
C201	UA654100	C.MYLAR	0.01uF	50V	
C201	UA654100	C.MYLAR	0.01uF	50V	ALBG
C202	UA654100	C.MYLAR	0.01uF	50V	ALBG
C203	UA654100	C.MYLAR	0.01uF	50V	ALBG
C204	UA654100	C.MYLAR	0.01uF	50V	ALBG
C205	UA654100	C.MYLAR	0.01uF	50V	ALBG
C206	UA654100	C.MYLAR	0.01uF	50V	ALBG
C207	UA654220	C.MYLAR	0.022uF	50V	ALBG
C208	UA654220	C.MYLAR	0.022uF	50V	ALBG
C209	UA654100	C.MYLAR	0.01uF	50V	ALBG
C210	UA654100	C.MYLAR	0.01uF	50V	ALBG
⚠ C221	UR868100	C.EL	100uF	50V	
⚠ C222	UR878100	C.EL	100uF	63V	
D1	VN008700	DIODE	1SS270A		
D2	VN008700	DIODE	1SS270A		
D3	VN008700	DIODE	1SS270A		
D4	VN008700	DIODE	1SS270A		
D5	VN008700	DIODE	1SS270A		

✻ New Parts

Schm Ref.	PART NO.	Description		Markets
D6	VD631600	DIODE	1SS133,176	
D7	VD631600	DIODE	1SS133,176	
D8	VD631600	DIODE	1SS133,176	
D9	VD631600	DIODE	1SS133,176	
D10	VD631600	DIODE	1SS133,176	
D11	VM975600	DIODE.ZENR	HZS12B2TD 12V	
D12	VM975600	DIODE.ZENR	HZS12B2TD 12V	
D13	VM976500	DIODE.ZENR	HZS302TD 30V	
D14	VM975600	DIODE.ZENR	HZS12B2TD 12V	
D15	VM975600	DIODE.ZENR	HZS12B2TD 12V	
D16	VM975600	DIODE.ZENR	HZS12B2TD 12V	
D17	VM975600	DIODE.ZENR	HZS12B2TD 12V	
D18	VN008700	DIODE	1SS270A	
D19	VN008700	DIODE	1SS270A	
D20	VN008700	DIODE	1SS270A	
D21	VN008700	DIODE	1SS270A	
D22	VM974100	DIODE.ZENR	HZS5B2TD 5.0V	
D23	VN008700	DIODE	1SS270A	
D161	VD631600	DIODE	1SS133,176	
⚠ D162	VM702000	DIODE.BRG	S5VB20 3.5A 200V	
⚠ D163	VQ379300	DIODE.BRG	S1VB20 1.0A 200V	
D164	VM975600	DIODE.ZENR	HZS12B2TD 12V	RT
⚠ D221	VS997800	DIODE	1T2	
⚠ D222	VS997800	DIODE	1T2	
⚠ D223	VS997800	DIODE	1T2	
⚠ F161	VS822500	FUSE	2.0A 125V	UC
⚠ F161	VT942900	FUSE	TH2.5A 250V	G
⚠ F162	KB000760	FUSE	T3.15A 250V	ALBG
⚠ F162	VP909900	FUSE	T7.0A 125V	UCRT
⚠ F271	KB000760	FUSE	T3.15A 250V	RT
G1	VR463400	TERM.GND	D3.5	
G161	VR463400	TERM.GND	D3.5	
HS161	VR506800	HEAT.SINK	PUH16-25	RT
L1	V2604200	COIL	1uH	
L2	V2604200	COIL	1uH	
L3	V2604200	COIL	1uH	
L4	V2604200	COIL	1uH	
L5	V2604200	COIL	1uH	
PN1	V3750200	PIN	L=70	
PN2	V3750200	PIN	L=70	
PN201	V3750200	PIN	L=70	
PN221	V3750200	PIN	L=70	
⚠ Q1	iC174020	TR	2SC1740S R,S	
⚠ Q2	iC174020	TR	2SC1740S R,S	
⚠ Q3	iC174020	TR	2SC1740S R,S	
⚠ Q4	iC174020	TR	2SC1740S R,S	
⚠ Q5	iC174020	TR	2SC1740S R,S	
⚠ Q6	VP872700	TR	2SC4488 S,T	
⚠ Q7	VP872600	TR	2SA1708 S,T	
⚠ Q8	VP872700	TR	2SC4488 S,T	
⚠ Q9	VP872600	TR	2SA1708 S,T	
⚠ Q10	VP872700	TR	2SC4488 S,T	
⚠ Q11	VP872600	TR	2SA1708 S,T	
⚠ Q12	VP872700	TR	2SC4488 S,T	
⚠ Q13	VP872600	TR	2SA1708 S,T	
⚠ Q14	VP872700	TR	2SC4488 S,T	
⚠ Q15	VP872600	TR	2SA1708 S,T	
⚠ Q16A	iX630850	TR	2SA1695 O,P,Y	
⚠ Q16C	iX630860	TR	2SC4468 O,P,Y	
⚠ Q17A	iX630850	TR	2SA1695 O,P,Y	
⚠ Q17C	iX630860	TR	2SC4468 O,P,Y	
⚠ Q18A	iX630850	TR	2SA1695 O,P,Y	
⚠ Q18C	iX630860	TR	2SC4468 O,P,Y	

✻ New Parts

P.C.B. MAIN

	Schm Ref.	PART NO.	Description		Markets
⚠	Q19A	iX630850	TR	2SA1695 O,P,Y	
⚠	Q19C	iX630860	TR	2SC4468 O,P,Y	
⚠	Q20A	iX630850	TR	2SA1695 O,P,Y	
⚠	Q20C	iX630860	TR	2SC4468 O,P,Y	
	Q26	iA097030	TR	2SA970 GR,BL	
⚠	Q27	VP883100	TR	2SC1890A D,E	
⚠	Q28	VP883100	TR	2SC1890A D,E	
⚠	Q29	VP883100	TR	2SC1890A D,E	
⚠	Q30	VP883100	TR	2SC1890A D,E	
⚠	Q31	VP883100	TR	2SC1890A D,E	
	Q32	iC224030	TR	2SC2240 GR,BL	
	Q33	iA1015I0	TR	2SA1015 Y	
	Q34	iC224030	TR	2SC2240 GR,BL	
	Q161	iC174020	TR	2SC1740S R,S	
⚠	Q162	VR510800	TR	2SD2396 J,K	RT
	Q163	VP882900	TR	2SC1890 E	RT
	R1	VP941500	R.MTL.OXD	4.7KΩ 1W	
	R2	VP941500	R.MTL.OXD	4.7KΩ 1W	
⚠	R3	HV756270	R.CAR.FP	2.7KΩ 1/4W	
⚠	R5	HV756100	R.CAR.FP	1KΩ 1/4W	
	R6	VP941500	R.MTL.OXD	4.7KΩ 1W	
	R7	VP941500	R.MTL.OXD	4.7KΩ 1W	
⚠	R8	HV756270	R.CAR.FP	2.7KΩ 1/4W	
⚠	R10	HV756100	R.CAR.FP	1KΩ 1/4W	
	R11	VP941500	R.MTL.OXD	4.7KΩ 1W	
	R12	VP941500	R.MTL.OXD	4.7KΩ 1W	
⚠	R13	HV756270	R.CAR.FP	2.7KΩ 1/4W	
⚠	R15	HV756100	R.CAR.FP	1KΩ 1/4W	
	R16	VP941500	R.MTL.OXD	4.7KΩ 1W	
	R17	VP941500	R.MTL.OXD	4.7KΩ 1W	
⚠	R18	HV756270	R.CAR.FP	2.7KΩ 1/4W	
⚠	R20	HV756100	R.CAR.FP	1KΩ 1/4W	
	R21	VP941500	R.MTL.OXD	4.7KΩ 1W	
	R22	VP941500	R.MTL.OXD	4.7KΩ 1W	
⚠	R23	HV756270	R.CAR.FP	2.7KΩ 1/4W	
⚠	R25	HV756100	R.CAR.FP	1KΩ 1/4W	
	R26	HV753470	R.CAR.FP	4.7Ω 1/4W	
⚠	R27	HV755820	R.CAR.FP	820Ω 1/4W	
⚠	R28	HV755330	R.CAR.FP	330Ω 1/4W	
⚠	R31	HV753470	R.CAR.FP	4.7Ω 1/4W	
⚠	R32	HV753470	R.CAR.FP	4.7Ω 1/4W	
⚠	R33	HV755820	R.CAR.FP	820Ω 1/4W	
⚠	R34	HV755330	R.CAR.FP	330Ω 1/4W	
⚠	R37	HV753470	R.CAR.FP	4.7Ω 1/4W	
⚠	R38	HV753470	R.CAR.FP	4.7Ω 1/4W	
⚠	R39	HV755820	R.CAR.FP	820Ω 1/4W	
⚠	R40	HV755330	R.CAR.FP	330Ω 1/4W	
⚠	R41	HV753470	R.CAR.FP	4.7Ω 1/4W	
⚠	R42	HV753470	R.CAR.FP	4.7Ω 1/4W	
⚠	R43	HV755820	R.CAR.FP	820Ω 1/4W	
⚠	R44	HV755330	R.CAR.FP	330Ω 1/4W	
⚠	R45	HV753470	R.CAR.FP	4.7Ω 1/4W	
⚠	R46	HV753470	R.CAR.FP	4.7Ω 1/4W	
⚠	R47	HV755820	R.CAR.FP	820Ω 1/4W	
⚠	R48	HV755330	R.CAR.FP	330Ω 1/4W	
⚠	R49	HV753470	R.CAR.FP	4.7Ω 1/4W	
⚠	R53	VU981700	R.MTL.PLAT	0.22Ω+0.22 3W	
⚠	R55	VU981700	R.MTL.PLAT	0.22Ω+0.22 3W	
⚠	R59	VU981700	R.MTL.PLAT	0.22Ω+0.22 3W	
⚠	R65	VU981700	R.MTL.PLAT	0.22Ω+0.22 3W	
⚠	R67	VU981700	R.MTL.PLAT	0.22Ω+0.22 3W	
	R75	HV754100	R.CAR.FP	10Ω 1/4W	
⚠	R76	VP939800	R.MTL.OXD	10Ω 1W	

⁎ New Parts

	Schm Ref.	PART NO.	Description		Markets
	R79	HV754100	R.CAR.FP	10Ω 1/4W	
⚠	R80	VP939800	R.MTL.OXD	10Ω 1W	
	R83	HV754100	R.CAR.FP	10Ω 1/4W	
⚠	R84	VP939800	R.MTL.OXD	10Ω 1W	
	R87	HV754100	R.CAR.FP	10Ω 1/4W	
⚠	R88	VP939800	R.MTL.OXD	10Ω 1W	
	R91	HV754100	R.CAR.FP	10Ω 1/4W	
⚠	R92	VP939800	R.MTL.OXD	10Ω 1W	
	R93	HV753100	R.CAR.FP	1Ω 1/4W	
	R94	HV753100	R.CAR.FP	1Ω 1/4W	
	R97	VP940700	R.MTL.OXD	330Ω 1W	UCRTALBG
	R98	HV753100	R.CAR.FP	1Ω 1/4W	
	R99	HV753100	R.CAR.FP	1Ω 1/4W	
	R102	VP941100	R.MTL.OXD	1KΩ 1W	
	R104	VP940700	R.MTL.OXD	330Ω 1W	UCRTALBG
	R105	VP940700	R.MTL.OXD	330Ω 1W	UCRTALBG
	R111	VP944500	R.MTL.OXD	390Ω 1W	
	R115	VP944500	R.MTL.OXD	390Ω 1W	
	R162	HV756560	R.CAR.FP	5.6KΩ 1/4W	RT
	R163	HV756560	R.CAR.FP	5.6KΩ 1/4W	RT
*	R167	V6730000	R.CAR.	2.2MΩ 1/2W	UC
⚠	R221	HV753100	R.CAR.FP	1Ω 1/4W	
⚠	R222	HV753100	R.CAR.FP	1Ω 1/4W	
⚠	R223	HV753100	R.CAR.FP	1Ω 1/4W	
⚠	RY1	VK438300	RELAY	DH24D2-OT/M2	
⚠	RY2	VK438300	RELAY	DH24D2-OT/M2	
⚠	RY3	VU566700	RELAY	DG24D2-OS/M	
⚠	RY161	V6017400	RELAY	DC SDT-S-112LMR2	
	ST1	V4040500	SCR.TERM	M3	
	ST161	V4040500	SCR.TERM	M3	
	SW161	V4104200	SW.SLIDE	SL13B-022-AMCS	UCRTALBG
	SW241	VV523900	SW.PUSH	PBS-YM-001	
⚠	SW271	V7182300	VOLT.SELCT	R8140213	RT
⚠	T161	XW606A00	TRANS.PWR		UC
⚠	T161	XW607A00	TRANS.PWR		RT
⚠	T161	XW608A00	TRANS.PWR		ALBG
	TE1	V4470700	TERM.SP	6P	UCRTA
	TE1	V4470900	TERM.SP	6P	LBG
⚠	TE161	V5867400	OUTLET.AC	2P AC-182-GB-11V	RT
⚠	TE161	VT915000	OUTLET.AC	2P	A
⚠	TE161	VU543100	OUTLET.AC	2P	UC
⚠	TE161	VU543300	OUTLET.AC	1P	B
⚠	TE161	VU543400	OUTLET.AC	2P	GL
	TE201	V5912200	TERM.SP	8P LTS0810	LBG
*	TE201	V6771200	TERM.SP	8P LTS0810	UCRTA
		EP600140	SCR.BND.HD	3x10 MFZN2-BL	RT

⁎ New Parts

Chip Resistors

Schm Ref.	PART NO.	Description			Markets
	RD350000	R.CAR.CHP	0Ω	1/10W	
	RD353220	R.CAR.CHP	2.2Ω	1/10W	
	RD354820	R.CAR.CHP	82Ω	1/10W	
	RD355100	R.CAR.CHP	100Ω	1/10W	
	RD355330	R.CAR.CHP	330Ω	1/10W	
	RD355470	R.CAR.CHP	470Ω	1/10W	
	RD355510	R.CAR.CHP	510Ω	1/10W	
	RD355680	R.CAR.CHP	680Ω	1/10W	
	RD356100	R.CAR.CHP	1KΩ	1/10W	
	RD356110	R.CAR.CHP	1.1KΩ	1/10W	
	RD356120	R.CAR.CHP	1.2KΩ	1/10W	
	RD356150	R.CAR.CHP	1.5KΩ	1/10W	
	RD356220	R.CAR.CHP	2.2KΩ	1/10W	
	RD356330	R.CAR.CHP	3.3KΩ	1/10W	
	RD356360	R.CAR.CHP	3.6KΩ	1/10W	
	RD356390	R.CAR.CHP	3.9KΩ	1/10W	
	RD356470	R.CAR.CHP	4.7KΩ	1/10W	
	RD356510	R.CAR.CHP	5.1KΩ	1/10W	
	RD356680	R.CAR.CHP	6.8KΩ	1/10W	
	RD356820	R.CAR.CHP	8.2KΩ	1/10W	
	RD357100	R.CAR.CHP	10KΩ	1/10W	
	RD357180	R.CAR.CHP	18KΩ	1/10W	
	RD357470	R.CAR.CHP	47KΩ	1/10W	
	RD358100	R.CAR.CHP	100KΩ	1/10W	
	RD359100	R.CAR.CHP	1MΩ	1/10W	

⁎ New Parts

Schm Ref.	PART NO.	Description		Markets

⁎ New Parts

■ EXPLODED VIEW

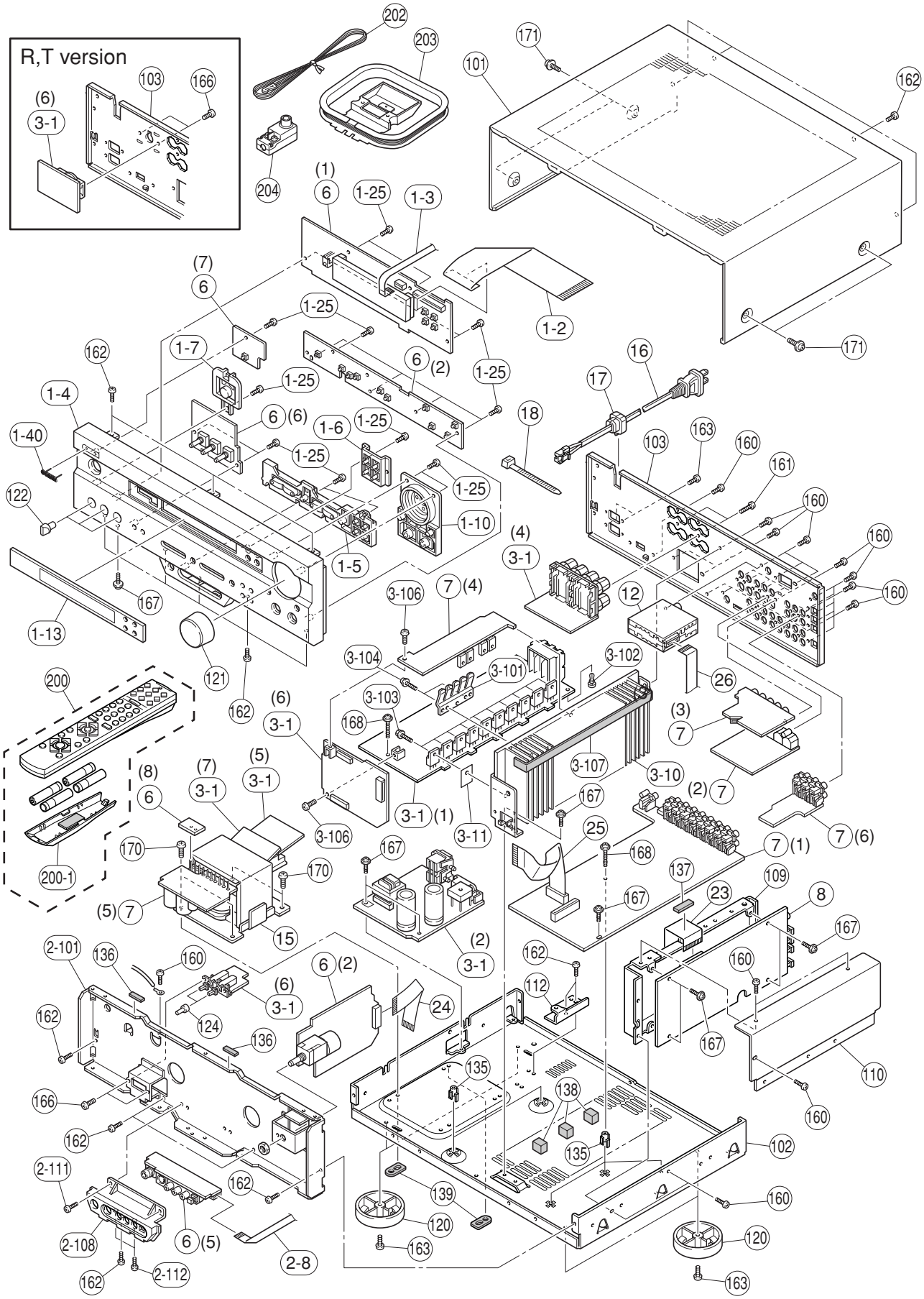

■ MECHANICAL PARTS

	Ref. No.	PART NO.	Description		Remarks	Markets
*	1-2	V7450600	S FLEXIBLE FLAT CABLE	37P 200mm P=1.25		
*	1-3	MF108300	FLEXIBLE FLAT CABLE	8P 300mm P=1.25		
*	1-4	V7641200	FRONT PANEL		V520GD	
*	1-4	V7641400	FRONT PANEL		V520RDSGD	
*	1-4	V6871900	FRONT PANEL		V520BL	
*	1-4	V6872100	FRONT PANEL		V520RDSBL	
*	1-4	V6872300	FRONT PANEL		V520RDSTI	
*	1-4	V6872900	FRONT PANEL		5450GD	
*	1-4	V6872800	FRONT PANEL		5450BL	
*	1-4	V6873200	FRONT PANEL		5450RDSBL	
*	1-4	V7641900	FRONT PANEL		5450SI	
*	1-5	V6875200	BUTTON/11P		V520/5450GD	
*	1-5	V6875100	BUTTON/11P		V520/5450BL	
*	1-5	V6875300	BUTTON/11P		V520TI	
*	1-5	V6875400	BUTTON/11P		5450SI	
*	1-6	V6874900	BUTTON/RDS		V520RDSGD	
*	1-6	V6874800	BUTTON/RDS		V520/5450RDSBL	
*	1-6	V6875000	BUTTON/RDS		V520RDSTI	
*	1-7	V6875700	BUTTON/POWER		V520/5450GD	
*	1-7	V6875500	BUTTON/POWER		V520BL	
*	1-7	V6875800	BUTTON/POWER		V520TI	
*	1-7	V6875900	BUTTON/POWER		5450BL	
*	1-7	V6876000	BUTTON/POWER		5450SI	
*	1-10	V6879300	ESCUTCHEN		V520GD	
*	1-10	V6879200	ESCUTCHEN		V520/5450BL	
*	1-10	V6879400	ESCUTCHEN		V520TI,5450GD	
*	1-10	V6879700	ESCUTCHEN		5450SI	
*	1-13	V6879900	SHEET/WINDOW		V520	
*	1-13	V6880000	SHEET/WINDOW		V520RDS	
*	1-13	V7391100	SHEET/WINDOW		5450	
*	1-13	V7391200	SHEET/WINDOW		5450RDS	
	1-25	EP630220	BIND HEAD P-TITE SCREW	3x8 ZMC2-BL		
	1-40	V6034200	EMBLEM	GD	V520GD,5450GDBL	
	1-40	V6034100	EMBLEM	BL	V520BLTI,5450SI	
*	2-8	MF107400	FLEXIBLE FLAT CABLE	7P 400mm P=1.25		
*	2-101	V6864700	SUB CHASSIS			
*	2-108	V6876600	SUPPORT/PJ		V520/5450GD	
*	2-108	V6876500	SUPPORT/PJ		V520/5450BL	
*	2-108	V6876700	SUPPORT/PJ		V520TI	
*	2-108	V6876800	SUPPORT/PJ		5450SI	
	2-111	EP600830	BIND HEAD B-TITE SCREW	3x8 MFC2-BL		
	2-112	VN413300	BIND HEAD BONDING B-T. SCREW	3x8 MFZN2-BL		
*	3-1	V7262300	P.C.B. ASS'Y	MAIN		UC
*	3-1	V7262400	P.C.B. ASS'Y	MAIN		RT
*	3-1	V7262500	P.C.B. ASS'Y	MAIN		A
*	3-1	V7262600	P.C.B. ASS'Y	MAIN		B
*	3-1	V7262700	P.C.B. ASS'Y	MAIN		G
*	3-1	V7262800	P.C.B. ASS'Y	MAIN		L
*	3-10	V6865100	HEAT SINK			
	3-11	VV849300	SHEET	19x24		
	3-101	V2461000	SUPPORT, TR			
	3-102	VQ368600	PUSH RIVET	P3555-B		
	3-103	VK173200	SCREW, TRANSISTOR	3x15 SP FCM3		

* New Parts

	Ref. No.	PART NO.	Description		Remarks	Markets
	3-104	VT669300	PW HEAD B-TITE SCREW	3x8-8 MFC2		
	3-106	EG330030	BIND HEAD SCREW	3x6 FCRM3-BL		
	3-107	V5454200	DAMPER	2x10x260		
*	6	V7260100	P.C.B. ASS'Y	OPERATION		UC
*	6	V7260200	P.C.B. ASS'Y	OPERATION		RT
*	6	V7260300	P.C.B. ASS'Y	OPERATION		AL
*	6	V7260400	P.C.B. ASS'Y	OPERATION		BG
*	7	V7261400	P.C.B. ASS'Y	INPUT		UCAL
*	7	V7261500	P.C.B. ASS'Y	INPUT		RT
*	7	V7261600	P.C.B. ASS'Y	INPUT		BG
*	8	V7261200	P.C.B. ASS'Y	DSP		
	12	V6782300	AM/FM TUNER	TFCE1U115A U,C		UCRT
	12	V6782400	AM/FM TUNER	TFCE1E317A A,B,G		ABGL
* ⚠	15	X0024B00	POWER TRANSFORMER			U
* ⚠	15	X0025B00	POWER TRANSFORMER			C
* ⚠	15	X0026B00	POWER TRANSFORMER			RT
* ⚠	15	X0027B00	POWER TRANSFORMER			A
* ⚠	15	X0028B00	POWER TRANSFORMER			BGL
⚠	16	V2363800	POWER CORD ASS'Y			UC
⚠	16	VZ542500	POWER CORD ASS'Y			RT
⚠	16	V2296800	POWER CORD ASS'Y			A
⚠	16	VV437300	POWER CORD ASS'Y			B
⚠	16	VN363700	POWER CORD ASS'Y			GL
	17	V2438700	CORD STOPPER	10P1		
	18	VU590000	BINDING TIE	CBTD001B		
	23	MF227160	S FLEXIBLE FLAT CABLE	27P 160mm		
*	24	MF123120	FLEXIBLE FLAT CABLE	23P 120mm P=1.25		
	25	MF124180	FLEXIBLE FLAT CABLE	24P 180mm		
*	26	MF115120	FLEXIBLE FLAT CABLE	15P 120mm P=1.25		
	101	VZ884500	TOP COVER		V520/5450GD	
	101	VV121300	TOP COVER		V520/5450BL	
	101	VV121500	TOP COVER		V520TI,5450SI	
*	102	V6864500	CHASSIS			
*	103	V6867500	REAR PANEL		V520	U
*	103	V6867600	REAR PANEL		V520	C
*	103	V6867700	REAR PANEL		V520	RT
*	103	V6867800	REAR PANEL		V520	A
*	103	V6867900	REAR PANEL		V520	L
*	103	V6868000	REAR PANEL		V520RDS	B
*	103	V6868100	REAR PANEL		V520RDS	G
*	103	V6868400	REAR PANEL		5450	U
*	103	V6868500	REAR PANEL		5450	C
*	103	V6868600	REAR PANEL		5450	RT
*	103	V6868700	REAR PANEL		5450	A
*	103	V6868800	REAR PANEL		5450RDS	G
*	109	V6864900	SHIELD CASE			
*	110	V6865000	SHIELD CASE COVER			
	112	V4168900	FRAME, PCB			
	120	V0042500	LEG	D60xH21	V520/5450GD	
	120	VS025000	LEG	D60xH21	V520BLTI,5450SI	
	120	VV544300	LEG	D60xH21	5450BL	UCAG
	120	V0042500	LEG	D60xH21	5450BL	T
*	121	V7124700	KNOB/D43(M)		V520/5450GD	

* New Parts

	Ref. No.	PART NO.	Description			Remarks	Markets
*	121	V7124600	KNOB/D43(M)			V520/5450BL	
*	121	V7124800	KNOB/D43(M)			V520RDSTI	
*	121	V7124900	KNOB/D43(M)			5450SI	
*	122	V6878300	KNOB/D12			V520/5450GD	
*	122	V6878200	KNOB/D12			V520/5450BL	
*	122	V6878400	KNOB/D12			V520RDSTI	
*	122	V6878500	KNOB/D12			5450SI	
*	124	V6876200	BUTTON/D5			V520/5450GD	
*	124	V6876100	BUTTON/D5			V520/5450BL	
*	124	V6876300	BUTTON/D5			V520RDSTI	
*	124	V6876400	BUTTON/D5			5450SI	
	135	VR264400	SPACER	H8			
*	136	V7716700	DAMPER	5x5x15			
*	137	VP857500	DAMPER	4x10x30			
	138	V2879500	SPACER PCB-M				
*	139	V7616600	DAMPER				
	160	VN413300	BIND HEAD BONDING B-T. SCREW	3x8	MFZN2-BL		
	161	VY731200	BONDING HEAD TAPPING SCREW	3x10	MFNI33		
	162	EP600830	BIND HEAD B-TITE SCREW	3x8	MFC2-BL		
	163	EP600250	BIND HEAD B-TITE SCREW	3x8	ZMC2-Y		
	166	EG330030	BIND HEAD SCREW	3x6	FCRM3-BL		
	167	VT669300	PW HEAD B-TITE SCREW	3x8-8	MFC2		
	168	VT669400	PW HEAD B-TITE SCREW	3x15-8	MFC2		
	170	21991500	PW HEAD S-TITE SCREW	4x8-10	FCRM3-BL		
	171	VD069600	PW HEAD S-TITE SCREW	4x8-10	MFNI-33	V520/5450GD	
	171	21991500	PW HEAD S-TITE SCREW	4x8-10	FCRM3-BL	V520/5450BL	
	171	VH313200	BW HEAD S-TITE SCREW	4x8-10	FNM3-BL	V520TI,5450SI	
			ACCESSORIES				
*	200	V6940900	REMOTE CONTROL TRANSMITTER	RAV206		BW069	UCRALT
*	200	V6941000	REMOTE CONTROL TRANSMITTER	RAV207		BW065A	BG
	200-1	AAX04810	LID			710650020	
	202	V6267000	ANTENNA, FM	1.4m 1pc			UCRT
	202	VQ147100	ANTENNA, FM	1.4m 1pc			ABGL
	203	VR248500	ANTENNA, AM LOOP	1.0m 1pc			
	204	VE364900	ANTENNA ADAPTER	PAL	75-300Ω		B
			BATTERY, MANGANESE	SUM-4,AAA,R03			

* New Parts

Parts List for Carbon Resistors

Value	**1/4W** Type Part No.	**1/6W** Type Part No.	Value	**1/4W** Type Part No.	**1/6W** Type Part No.
1.0 Ω	HJ35 3100	HF85 3100	10 kΩ	HF45 7100	HF45 7100
1.8 Ω	HJ35 3180	✻	11 kΩ	HF45 7110	HF45 7110
2.2 Ω	HJ35 3220	HF85 3220	12 kΩ	HJ35 7120	HF85 7120
3.3 Ω	HJ35 3330	HF85 3330	13 kΩ	HF45 7130	HF45 7130
4.7 Ω	HJ35 3470	HF85 3470	15 kΩ	HF45 7150	HF45 7150
5.6 Ω	HJ35 3560	HF85 3560	18 kΩ	HF45 7180	HF45 7180
10 Ω	HF45 4100	HF45 4100	22 kΩ	HF45 7220	HF45 7220
15 Ω	HJ35 4150	HF85 4150	24 kΩ	HF45 7240	HF45 7240
22 Ω	HF45 4220	HF45 4220	27 kΩ	HJ35 7270	HF85 7270
27 Ω	HJ35 4270	HF85 4270	30 kΩ	HF45 7300	HF45 7300
33 Ω	HF45 4330	HF45 4330	33 kΩ	HF45 7330	HF45 7330
39 Ω	HJ35 4470	HF85 4390	36 kΩ	HF45 7360	HF45 7360
47 Ω	HF45 4470	HF45 4470	39 kΩ	HF45 7390	HF45 7390
56 Ω	HF45 4560	HF45 4560	47 kΩ	HF45 7470	HF45 7470
68 Ω	HF45 4680	HF45 4680	51 kΩ	HF45 7510	HF45 7510
75 Ω	HF45 4750	HF45 4750	56 kΩ	HF45 7560	HF45 7560
82 Ω	HF45 4820	HF45 4820	62 kΩ	HF45 7620	HF45 7620
91 Ω	HF45 4910	HF45 4910	68 kΩ	HF45 7680	HF45 7680
100 Ω	HF45 5100	HF45 5100	82 kΩ	HF45 7820	HF45 7820
110 Ω	HJ35 5110	HF85 5110	91 kΩ	HF45 7910	HF45 7910
120 Ω	HF45 5120	HF45 5120	100 kΩ	HF45 8100	HF45 8100
150 Ω	HF45 5150	HF45 5150	110 kΩ	HF45 8110	HF45 8110
160 Ω	HJ35 5160	✻	120 kΩ	HF45 8120	HF45 8120
180 Ω	HF45 5180	HF45 5180	150 kΩ	HF45 8150	HF45 8150
200 Ω	HF45 5200	HF45 5200	180 kΩ	HF45 8180	HF45 8180
220 Ω	HF45 5220	HF45 5220	220 kΩ	HJ35 8220	HF85 8220
270 Ω	HF45 5270	HF45 5270	270 kΩ	HF45 8270	HF45 8270
330 Ω	HF45 5330	HF45 5330	300 kΩ	HF45 8300	HF45 8300
390 Ω	HF45 5390	HF45 5390	330 kΩ	HF45 8330	HF45 8330
430 Ω	HF45 5430	HF45 5430	390 kΩ	HJ35 8390	HF85 8390
470 Ω	HF45 5470	HF45 5470	470 kΩ	HF45 8470	HF45 8470
510 Ω	HF45 5510	HF45 5510	560 kΩ	HJ35 8560	HF85 8560
560 Ω	HF45 5560	HF45 5560	680 kΩ	HJ35 8680	HF85 8680
680 Ω	HF45 5680	HF45 5680	820 kΩ	HJ35 8820	HF85 8820
820 Ω	HF45 5820	HF45 5820	1.0 MΩ	HF45 9100	HF45 9100
910 Ω	HF45 5910	HF45 5910	1.2 MΩ	HJ35 9120	✻
1.0 kΩ	HF45 6100	HF45 6100	1.5 MΩ	HJ35 9150	HF85 9150
1.2 kΩ	HF45 6120	HF45 6120	1.8 MΩ	HJ35 9180	HF85 9180
1.5 kΩ	HF45 6150	HF45 6150	2.2 MΩ	HJ35 9220	HF85 9220
1.8 kΩ	HF45 6180	HF45 6180	3.3 MΩ	HJ35 9330	HF85 9330
2.0 kΩ	HJ35 6200	HF85 6200	3.9 MΩ	HJ35 9390	✻
2.2 kΩ	HF45 6220	HF45 6220	4.7 MΩ	HJ35 9470	HF85 9470
2.4 kΩ	HJ35 6240	HF85 6240			
2.7 kΩ	HF45 6270	HF45 6270			
3.0 kΩ	HF45 6300	HF45 6300			
3.3 kΩ	HF45 6330	HF45 6330			
3.6 kΩ	HJ35 6360	HF85 6360			
3.9 kΩ	HF45 6390	HF45 6390			
4.7 kΩ	HF45 6470	HF45 6470			
5.1 kΩ	HF45 6510	HF45 6510			
5.6 kΩ	HF45 6560	HF45 6560			
6.8 kΩ	HF45 6680	HF45 6680			
8.2 kΩ	HF45 6820	HF45 6820			
9.1 kΩ	HF45 6910	HF45 6910			

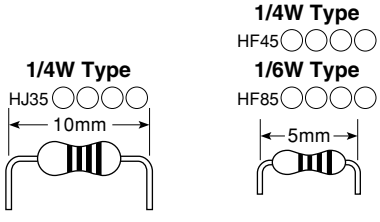

✻ : Not available

■ REMOTE CONTROL TRANSMITTER

● SCHEMATIC DIAGRAM

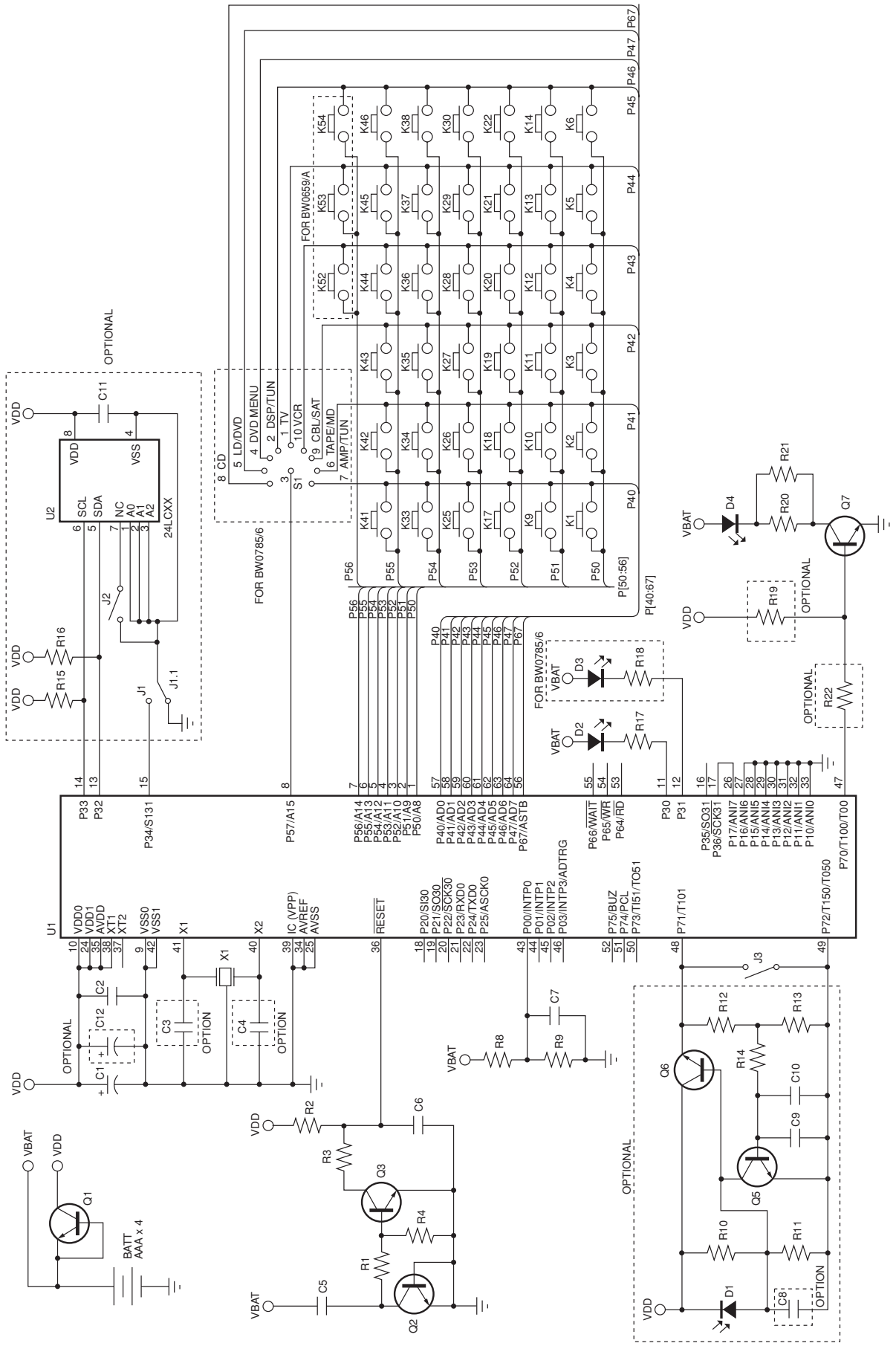

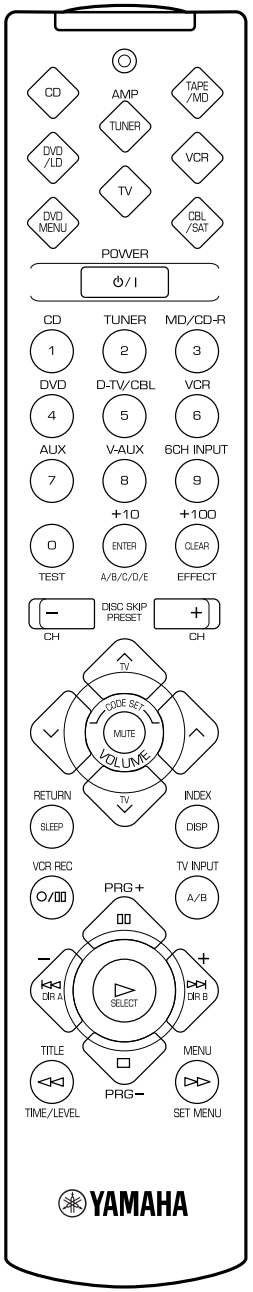

Function Keychart

NO	Key Label	Key Type	TV	CABLE/DBS	VCR	DVD MENU	DVD/LD	CD	TAPE/MD	AMP/TUNER
1	CD	Device	N/A							
2	AMP/TUNER	Device								
3	TAPE/MD	Device								
4	DVD/LD	Device								
5	TV	Device								
6	VCR	Device								
7	DVD MENU	Device								
8	CABLE/DBS	Device								
9	POWER	Primary	TV POWER	CBL/DBS POWER	VCR POWER	DVD/LD	POWER	CD POWER	TAPE/MD POWER	AMP POWER
10	1	Primary	CH1	CH1	CH1	1	CD			
11	2	Primary	CH2	CH2	CH2	2	TUNER			
12	3	Primary	CH3	CH3	CH3	3	MD/CD-R			
13	4	Primary	CH4	CH4	CH4	4	DVD			
14	5	Primary	CH5	CH5	CH5	5	D-TV/CBL			
15	6	Primary	CH6	CH6	CH6	6	VCR			
16	7	Primary	CH7	CH7	CH7	7	AUX			
17	8	Primary	CH8	CH8	CH8	8	V-AUX			
18	9	Primary	CH9	CH9	CH9	9	6CH INPUT			
19	0	Primary	CH0/CH10(J)	CH0	CH0	0	-	-	-	TEST
20	ENTER	Primary	CH Enter/CH1(J)	CH Enter	CH Enter	+10	-	-	-	A/B/C/D/E
21	EFFECT	Primary	TV EFFECT/CH12(J)	+100	TV EFFECT	CLEAR	AMP EFFECT			
22	CH-	Primary	TV CH-	CBL/DBS CH-	VCR CH-	DISC	DISC -	DISC -	-	PRESET -
23	CH+	Primary	TV CH+	CBL/DBS CH+	VCR CH+	DISC	DISC +	DISC +	-	PRESET +
24	TV VOL+	Primary				TV VOL+				
25	VOL-	Primary				VOL-				
26	MUTE	Primary	TV MUTE				AMP MUTE			
27	VOL+	Primary				VOL+				
28	TV VOL-	Primary				TV VOL-				
29	SLEEP	Primary	TV SLEEP			RETURN	SLEEP			
30	DISPLAY	Primary	DISPLAY	DISPLAY	DISPLAY	INDEX	DISPLAY	DISPLAY	DISPLAY	-
31	REC	Primary	VCR REC	-	VCR REC	-	-	-	REC/PAUSE	-
32	TV INPUT	Primary	TV INPUT						A/B	TV INPUT
33	PAUSE	Primary	VCR PAUSE	Up	VCR PAUSE	Up	PAUSE	PAUSE	PAUSE	PRG+
34	SKIP-	Primary	-	Left	-	Left	SKIP/CHAP-	SKIP-	DIR A/SKIP-	Down
35	PLAY	Primary	VCR PLAY	Menu Select	VCR PLAY	Select	PLAY	PLAY	PLAY	-
36	SKIP+	Primary	-	Right	-	Right	SKIP/CHAP+	SKIP+	DIR B/SKIP+	Up
37	STOP	Primary	VCR STOP	Down	VCR STOP	Down	STOP	STOP	STOP	PRG-
38	REW	Primary	VCR REW	RACALL	VCR REW	TITLE	REW	STOP	REW	TIME/LEVEL
39	FF	Primary	VCR FF	MENU	VCR FF	MENU	FF	FF	FF	SET MENU
		Library	TV	CABLE DBS (SAT) AUX	VCR	DVD (MENU) AUX	DVD (MENU) LD	CD	TAPE MD CD-R	x
		Default	Your recommend			Yamaha DVD (MENU)		Yamaha CD	Yamaha MD	AMP

RX-V520/RX-V520RDS/
HTR-5450/HTR-5450RDS

List of the Yamaha Code (NEC Format)

Key No.	Key Name	DVD	Yamaha 0008	DVD MENU	Yamaha 0008	LD	Yamaha 0007	CD	Yamaha 0005	Yamaha 0015
3	1	1	7C-94	1	7C-94	1	7C-17	1	79-11	79-11
4	2	2	7C-95	2	7C-95	2	7C-18	2	79-12	79-12
5	3	3	7C-96	3	7C-96	3	7C-19	3	79-13	79-13
6	4	4	7C-97	4	7C-97	4	7C-1A	4	79-14	79-14
7	5	5	7C-98	5	7C-98	5	7C-1B	5	79-15	79-15
8	6	6	7C-99	6	7C-99	6	7C-1C	6	79-16	79-16
9	7	7	7C-9A	7	7C-9A	7	7C-1D	7	79-17	79-17
10	8	8	7C-9B	8	7C-9B	8	7C-1E	8	79-18	79-18
11	9	9	7C-9C	9	7C-9C	9	7C-1F	9	79-19	79-19
12	0	0	7C-93	0	7C-93	0	7C-16	0	79-10	79-10
13	ENTER	INDEX	7C-9E	INDEX	7C-9E	CHP/TIME	7C-15	INDEX	79-0B	79-0B
14	>10	+10	7C-9D	+10	7C-9D	+10	7C-5D	+10	79-1A	79-1A
15	CH+	DISC+	7C-8B	DISC+	7C-8B	DISC+	–	DISC+	7A-4F	79-4F
16	CH-	DISC-	7C-8A	DISC-	7C-8A	DISC-	–	DISC-	7A-50	79-50
17	REC	REC	–	RETURN	7C-B7	REC	–	REC	–	–
18	DISPLAY	DISPLAY	7C-A6	DISPLAY	7C-A6	DISPLAY	7C-13	DISPLAY	79-0A	79-0A
19	PAUSE	PAUSE	7C-B3	Up	7C-B4	PAUSE	7C-5A	PAUSE	7A-09	79-55
20	SKIP-	SKIP/CHAP-	7C-B9	Left	7C-B5	SKIP/CHAP-	7C-02	SKIP-	7A-0B	79-04
21	PLAY	PLAY	7C-B2	Select	7C-B8	PLAY	7C-05	PLAY	7A-08	79-02
22	SKIP+	SKIP/CHAP+	7C-BA	Right	7C-B6	SKIP/CHAP+	7C-03	SKIP+	7A-0A	79-07
23	STOP	STOP	7C-B5	Down	7C-B3	STOP	7C-5B	STOP	7A-06	79-56
24	REW	REW	7C-B6	TITLE	7C-B1	REW	7C-06	REW	7A-0D	79-05
25	FF	FF	7C-B7	MENU	7C-B2	FF	7C-07	FF	7A-0C	79-06
26	AV POWER	DVD POWER	7C-B0	DVD POWER	7C-B0	LD POWER	–	CD POWER	–	–
27	TV POWER		Punch Through		Punch Through		Punch Through		Punch Through	
28	STANDBY		Punch Through		Punch Through		Punch Through		Punch Through	
29	POWER		Punch Through		Punch Through		Punch Through		Punch Through	
30	TV VOL+		Punch Through		Punch Through		Punch Through		Punch Through	
31	TV VOL-		Punch Through		Punch Through		Punch Through		Punch Through	
32	TV INPUT		Punch Through		Punch Through		Punch Through		Punch Through	
33	SLEEP		Punch Through		Punch Through		Punch Through		Punch Through	
34	MUTE		Punch Through		Punch Through		Punch Through		Punch Through	
35	VOL+		Punch Through		Punch Through		Punch Through		Punch Through	
36	VOL-		Punch Through		Punch Through		Punch Through		Punch Through	

–: No Code

Key No.	Key Name		TAPE Yamaha 0004	TAPE Yamaha 0014	MD Yamaha 0024	AMP/TUNER	AMP 0003	DSP 0013	TUNER 0023
3	1	1	–	–	79-85	CD	7A-15	7A-88	7A-E5
4	2	2	–	–	79-85	TUNER	7A-16	7A-89	7A-E6
5	3	3	–	–	79-87	TAPE/MD	7A-18	7A-8A	7A-E7
6	4	4	–	–	79-88	DVD/LD	7A-17	7A-8B	7A-E8
7	5	5	–	–	79-89	D-TV	7A-54	7A-8C	7A-E9
8	6	6	–	–	79-8A	VCR	7A-0F	7A-8D	7A-EA
9	7	7	–	–	79-8B	PHONO	7A-14	7A-8E	7A-EB
10	8	8	–	–	79-8C	CBL/SAT	7A-C0	7A-8F	7A-EC
11	9	9	–	–	79-8D	V-AUX	7A-55	7A-90	–
12	0	0	–	–	79-8E	EXT. DEC.	7A-87	7A-91	–
13	ENTER	INDEX	–	–	–	A/B/C/D/E	7A-12	7A-12	7A-12
14	>10	+10	–	–	79-8F	(VCR2)	7A-13	7A-56	–
15	CH+	CH+	–	–	–	PRESET+	7A-10	7A-10	7A-10
16	CH-	CH-	–	–	–	PRESET-	7A-11	7A-11	7A-11
17	REC	REC/PAUSE	7A-04	7F-04	79-AF	TEST	7A-85	7A-85	7A-85
18	DISPLAY	A/B DISPLAY	7A-06	7F-06	79-A5	ON SCREEN	7A-C2	7A-C2	7A-C2
19	PAUSE	PAUSE	–	–	79-A9	Up	7A-98	7A-98	7A-98
20	SKIP-	DIR A/SKIP-	7A-07	7F-07	79-AB	Left	7A-53	7A-53	7A-53
21	PLAY	PLAY	7A-00	7F-00	79-A8		–	–	–
22	SKIP+	DIR B/SKIP+	7A-40	7F-0B	79-AE	Right	7A-52	7A-52	7A-52
23	STOP	STOP	7A-03	7F-03	79-AA	Down	7A-99	7A-99	7A-99
24	REW	REW	7A-01	7F-01	79-AC	TIME/LEVEL	7A-86	7A-86	7A-86
25	FF	FF	7A-02	7F-02	79-AD	SET MENU	7A-9C	7A-9C	7A-9C
26	AV POWER	TAPE/MD POWER	–	–	–		–	–	–
27	TV POWER		Punch Through	Punch Through	Punch Through		Punch Through	Punch Through	Punch Through
28	STANDBY		Punch Through	Punch Through	Punch Through	AMP STANDBY	7A-1E	7A-1E	7A-1E
29	POWER		Punch Through	Punch Through	Punch Through	AMP POWER	7A-1D	7A-1D	7A-1D
30	TV VOL+		Punch Through	Punch Through	Punch Through		Punch Through	Punch Through	Punch Through
31	TV VOL-		Punch Through	Punch Through	Punch Through		Punch Through	Punch Through	Punch Through
32	TV INPUT		Punch Through	Punch Through	Punch Through		Punch Through	Punch Through	Punch Through
33	SLEEP		Punch Through	Punch Through	Punch Through	AMP SLEEP	7A-57	7A-57	7A-57
34	MUTE		Punch Through	Punch Through	Punch Through	AMP MUTE	7A-1C	7A-1C	7A-1C
35	VOL+		Punch Through	Punch Through	Punch Through	AMP VOL+	7A-1A	7A-1A	7A-1A
36	VOL-		Punch Through	Punch Through	Punch Through	AMP VOL-	7A-1B	7A-1B	7A-1B

–: No Code