AV RECEIVER
RX-V620/HTR-5460
RX-V620RDS

SERVICE MANUAL

IMPORTANT NOTICE

This manual has been provided for the use of authorized YAMAHA Retailers and their service personnel.
It has been assumed that basic service procedures inherent to the industry, and more specifically YAMAHA Products, are already known and understood by the users, and have therefore not been restated.

WARNING: Failure to follow appropriate service and safety procedures when servicing this product may result in personal injury, destruction of expensive components, and failure of the product to perform as specified. For these reasons, we advise all YAMAHA product owners that any service required should be performed by an authorized YAMAHA Retailer or the appointed service representative.

IMPORTANT: The presentation or sale of this manual to any individual or firm does not constitute authorization, certification or recognition of any applicable technical capabilities, or establish a principle-agent relationship of any form.

The data provided is believed to be accurate and applicable to the unit(s) indicated on the cover. The research, engineering, and service departments of YAMAHA are continually striving to improve YAMAHA products. Modifications are, therefore, inevitable and specifications are subject to change without notice or obligation to retrofit. Should any discrepancy appear to exist, please contact the distributor's Service Division.

WARNING: Static discharges can destroy expensive components. Discharge any static electricity your body may have accumulated by grounding yourself to the ground buss in the unit (heavy gauge black wires connect to this buss).

IMPORTANT: Turn the unit OFF during disassembly and part replacement. Recheck all work before you apply power to the unit.

■ CONTENTS

TO SERVICE PERSONNEL 1
FRONT PANELS 2
REAR PANELS ..... 3 – 4
SPECIFICATIONS ..... 5 – 7
INTERNAL VIEW 7
DISASSEMBLY PROCEDURES ..... 8 – 10
SELF DIAGNOSIS FUNCTION ..... 11 – 29
AMP CHECK 30
IC DATA ..... 31 – 38
DISPLAY DATA ..... 39 – 40
PIN CONNECTION DIAGRAM 41
BLOCK DIAGRAM ..... 42 – 45
PRINTED CIRCUIT BOARD ..... 46 – 69
SCHEMATIC DIAGRAM ..... 70 – 75
PARTS LIST ..... 76 – 94
REMOTE CONTROL TRANSMITTER ..... 95 – 97

このサービスマニュアルは、エコマーク認定の再生紙を使用しています。
This Service Manual uses recycled paper.

100760

YAMAHA
YAMAHA CORPORATION
P.O.Box 1, Hamamatsu, Japan

■ TO SERVICE PERSONNEL

1. Critical Components Information
   Components having special characteristics are marked ⚠ and must be replaced with parts having specifications equal to those originally installed.
2. Leakage Current Measurement (For 120V Models Only)
   When service has been completed, it is imperative to verify that all exposed conductive surfaces are properly insulated from supply circuits.

- Meter impedance should be equivalent to 1500 ohm shunted by 0.15µF.
- Leakage current must not exceed 0.5mA.

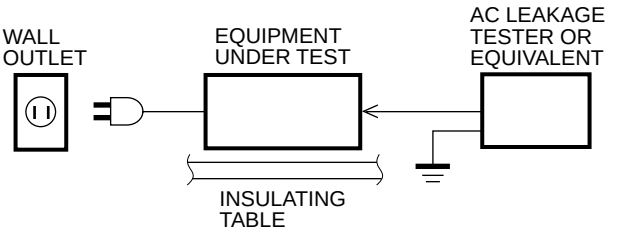

- Be sure to test for leakage with the AC plug in both polarities.

"CAUTION"
"F741 : FOR CONTINUED PROTECTION AGAINST RISK OF FIRE, REPLACE ONLY WITH SAME TYPE 2A, 125V FUSE."
"F742 : FOR CONTINUED PROTECTION AGAINST RISK OF FIRE, REPLACE ONLY WITH SAME TYPE 8A, 125V FUSE."

CAUTION
F741 : REPLACE WITH SAME TYPE 2A, 125V FUSE.
F742 : REPLACE WITH SAME TYPE 8A, 125V FUSE.

ATTENTION
F741 : UTILISER UN FUSIBLE DE RECHANGE DE MEME TYPE DE 2A, 125V.
F742 : UTILISER UN FUSIBLE DE RECHANGE DE MEME TYPE DE 8A, 125V.

WARNING: CHEMICAL CONTENT NOTICE!

The solder used in the production of this product contains LEAD. In addition, other electrical/ electronic and/or plastic (where applicable) components may also contain traces of chemicals found by the California Health and Welfare Agency (and possibly other entities) to cause cancer and/or birth defects or other reproductive harm.

DO NOT PLACE SOLDER, ELECTRICAL/ ELECTRONIC OR PLASTIC COMPONENTS IN YOUR MOUTH FOR ANY REASON WHATSOEVER!

Avoid prolonged, unprotected contact between solder and your skin! When soldering, do not inhale solder fumes or expose eyes to solder/flux vapor!

If you come in contact with solder or components located inside the enclosure of this product, wash your hands before handling food.

WARNING
Do not change the IMPEDANCE SELECTOR switch setting while the power to this unit is on, otherwise this unit may be damaged.

IMPEDANCE SELECTOR

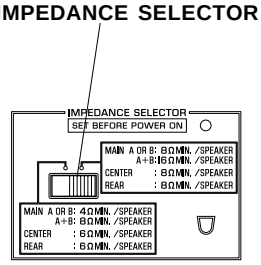

■ FRONT PANELS

▼ RX-V620/HTR-5460

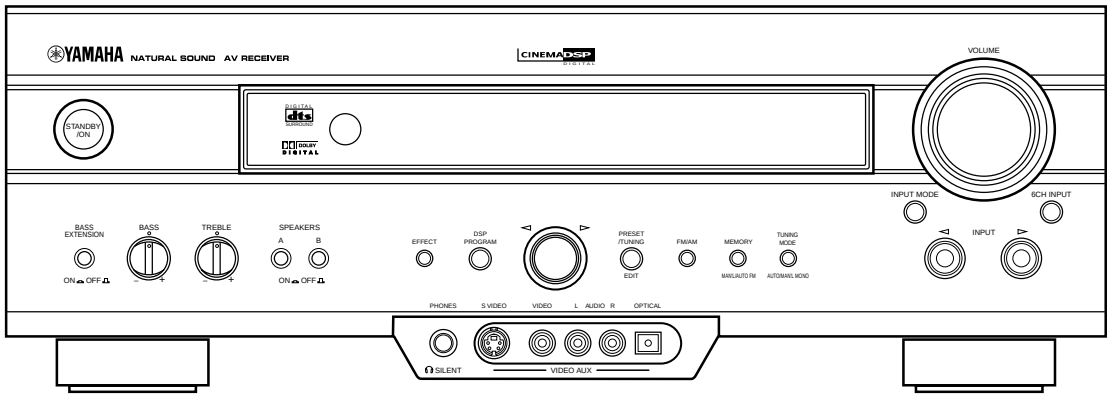

▼ RX-V620RDS

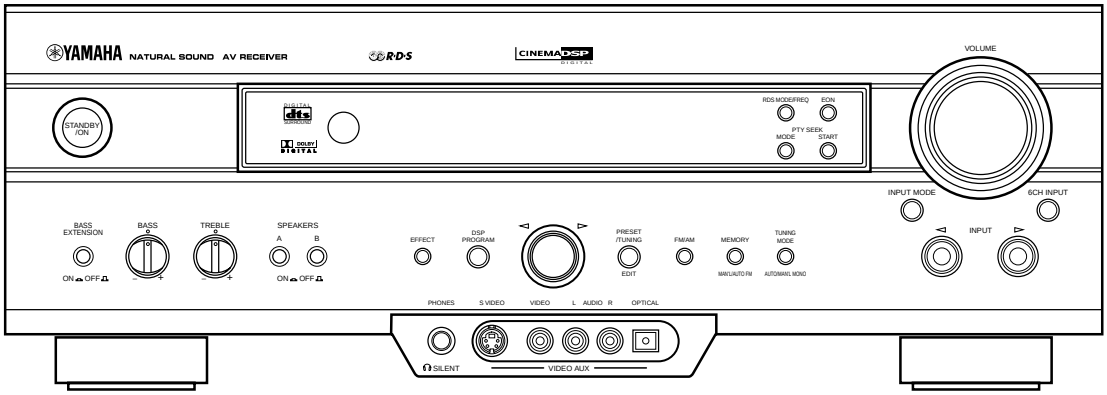

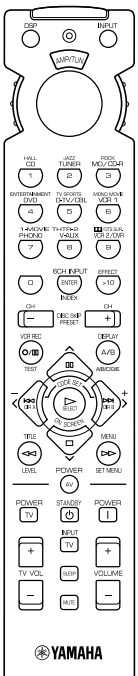

■ REAR PANELS

▼ RX-V620/HTR-5460 U model

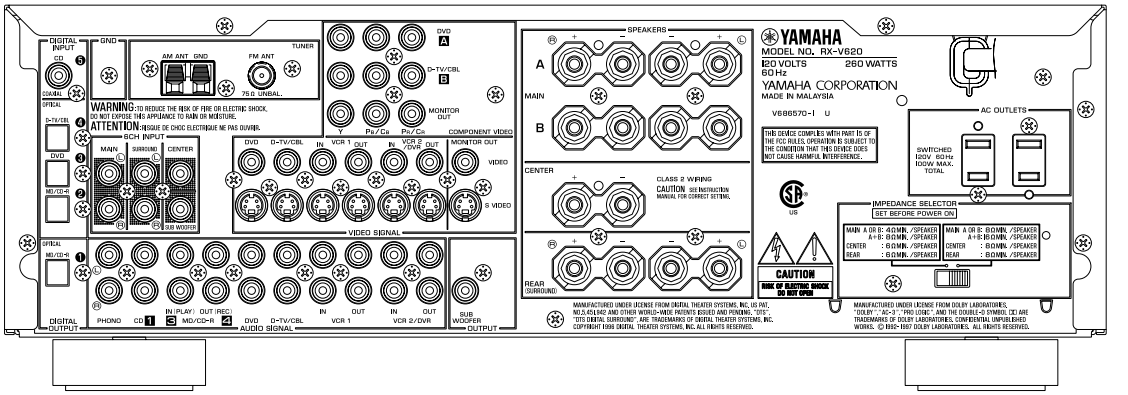

▼ RX-V620/HTR-5460 C model

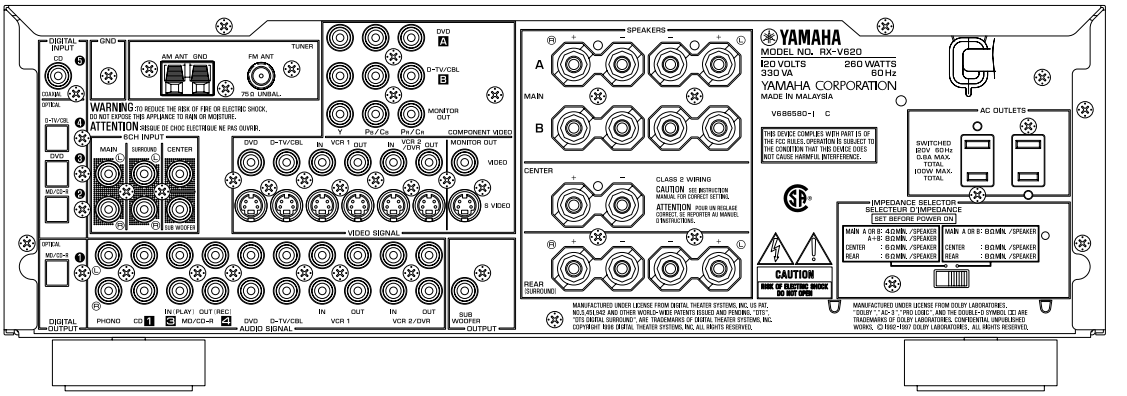

▼ RX-V620 R model, RX-V620/HTR-5460 T model

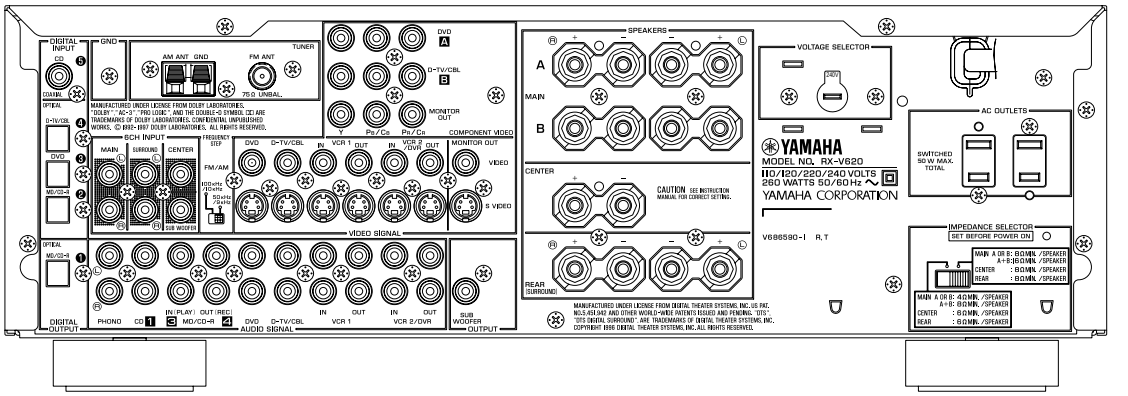

▼ RX-V620 L model

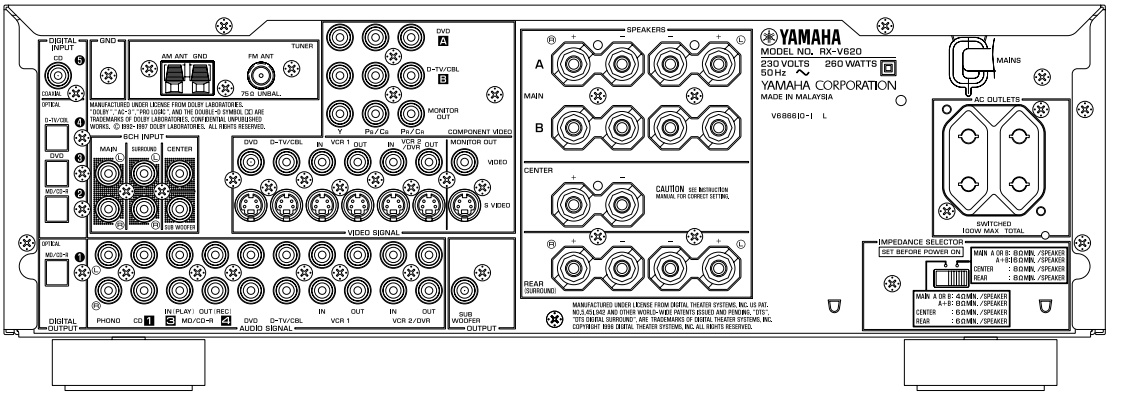

▼ RX-V620/HTR-5460 A model

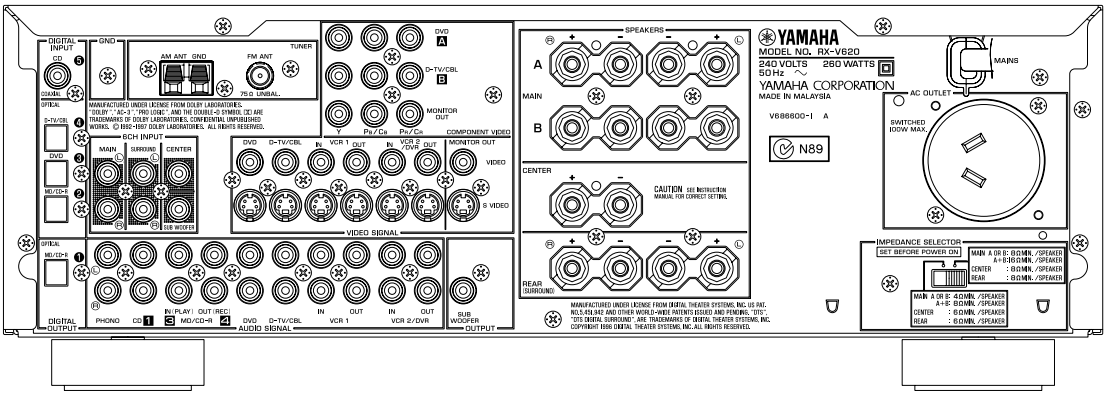

▼ RX-V620RDS B model

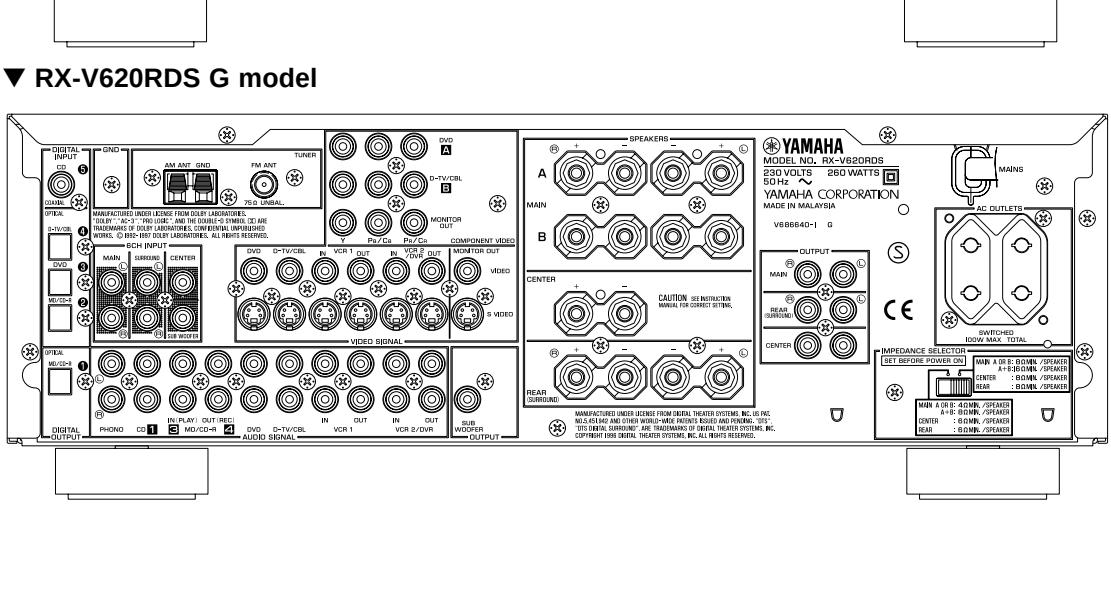

▼ RX-V620RDS G model

■ SPECIFICATIONS

■ AUDIO SECTION

Minimum RMS Output Power per Channel
MAIN, 20Hz to 20kHz, 0.06% THD, 8Ω
U, C models ..... 100W+100W
R, T, A, B, G, L models ..... 90W+90W
CENTER, 20Hz to 20kHz, 0.06% THD, 8Ω
U, C models 100W
R, T, A, B, G, L models 90W
REAR, 20Hz to 20kHz, 0.06% THD, 8Ω
U, C models ..... 100W+100W
R, T, A, B, G, L models ..... 90W+90W
Minimum RMS Output Power per Channel
MAIN, 1kHz, 8Ω
U, C models (0.09% THD) ..... 110W+110W
R, T, A, B, G, L models (0.06% THD) ... 100W+100W
CENTER, 1kHz, 8Ω
U, C models (0.09% THD) 110W
R, T, A, B, G, L models (0.06% THD) 100W
REAR, 1kHz, 8Ω
U, C models (0.09% THD) ..... 110W+110W
R, T, A, B, G, L models (0.06% THD) ... 100W+100W
Maximum Power per Channel (R, T models only)
MAIN, 1kHz, 10% THD, 8Ω, EIAJ ..... 115W+115W
CENTER, 1kHz, 10% THD, 8Ω, EIAJ 115W
REAR, 1kHz, 10% THD, 8Ω, EIAJ ..... 115W+115W
Dynamic Power per Channel
MAIN, 8/6/4/2Ω
U, C models 130/150/190/240W
R, T, A, B, G, L models 120/140/175/210W
DIN Standard Output Power per Channel (G model only)
MAIN, 1kHz, 0.7% THD, 4Ω ..... 130W+130W
CENTER, 1kHz, 0.7% THD, 4Ω 130W
REAR, 1kHz, 0.7% THD, 4Ω ..... 130W+130W
Dynamic Headroom (U, C models only)
8Ω 1.14dB
IEC Power (G model only)
MAIN, 1kHz, 0.06% THD, 8Ω ..... 100W+100W
Damping Factor
MAIN, 20Hz to 20kHz, 8Ω ..... 80 or more
Input Sensitivity/Impedance
PHONO MM 2.5mV/47kΩ
CD, etc 150mV/47kΩ
EXT. DECODER
MAIN 150mV/47kΩ
CENTER 150mV/47kΩ
REAR 150mV/47kΩ
SUBWOOFER 150mV/47kΩ
Maximum Input Signal Level
PHONO MM, 1kHz, 0.1% THD (Effect on) 100mV
CD, etc, 1kHz, 0.5% THD (Effect on) 2.2V
Output Level/Impedance
REC OUT 150mV/1.2kΩ
PRE OUT (B, G models only) 2.1V/1.2kΩ
SUBWOOFER (MAIN SP : SMALL) 4.0V/1.2kΩ
Headphone Jack Rated Output/Impedance
CD, etc (1kHz, 150mV, 8Ω) 0.4V/560Ω
Frequency Response
CD, etc (10Hz to 100kHz, MAIN L/R) ..... +0/-3.0dB
RIAA Equalization Deviation
PHONO MM (20Hz to 20kHz) ..... 0±0.5dB
Total Harmonic Distortion (20Hz to 20kHz)
PHONO MM to REC OUT (1V) 0.02%
CD, etc, to SP OUT L/R (45W/8Ω) 0.06%
Signal-to-Noise Ratio (IHF-A-Network)
PHONO MM to REC OUT, Input Shorted 5mV
U, C, R, T models 86dB
A, B, G, L models 81dB
CD, etc, to SP OUT
Input Shorted 250mV (Effect off) 100dB
Residual Noise (IHF-A-Network)
MAIN L/R, SP OUT 150μV
Channel Separation (Vol. –30dB, Effect off)
PHONO MM, Input Shorted, 1kHz/10kHz 60dB/55dB
CD, etc, Input 5.1kΩ Shorted, 1kHz/10kHz .. 60dB/45dB
Tone Control Characteristics
BASS : Boost/cut ..... ±10dB (50Hz)
Turnover Frequency 350Hz
TREBLE : Boost/cut ..... ±10dB (20kHz)
Turnover Frequency 3.5kHz
Filter Characteristics
MAIN, REAR SP SMALL (H.P.F.) .. fc = 90Hz, 12dB/oct.
SUBWOOFER OUT (L.P.F.) ..... fc = 90Hz, 18dB/oct.
Bass Extension ..... +6dB (60Hz)

■ FM SECTION

Tuning Range
U, C models ..... 87.5 to 107.9MHz
A, B, G, L models ..... 87.50 to 108.00MHz
R, T models ..... 87.5 to 108.0/87.50 to 108.00MHz
50dB Quieting Sensitivity (IHF, 75 Ω)
Mono (1kHz, 100% Mod.) 2.0μV (17.3dBf)
Stereo (1kHz, 100% Mod.) 25μV (39.2dBf)
Usable Sensitivity (IHF)
Mono 1.0μV (11.2dBf)
Selectivity
400kHz 70dB
Signal-to-Noise Ratio (IHF)
Mono 76dB
Stereo 70dB
Harmonic Distortion
Mono (1kHz) 0.2%
Stereo (1kHz) 0.3%
Stereo Separation
1kHz 45dB
Frequency Response
20Hz to 15kHz ..... +0.5/-2dB
Antenna Input ..... 75 Ω unbalanced

■ AM SECTION

Tuning Range
U, C models ..... 530 to 1,710kHz
A, B, G, L models ..... 531 to 1,611kHz
R, T models ..... 530 to 1,710/531 to 1,611kHz
Usable Sensitivity 300μV/m
Antenna ..... Loop antenna

■ VIDEO SECTION

Video Signal Type
- U, C models ..... NTSC
- A, B, G, L models ..... PAL
- R, T models ..... NTSC/PAL

Composite Video Signal Level 1Vp-p/75Ω

S-Video Signal Level
- Y 1Vp-p/75Ω
- C 0.286Vp-p/75Ω

Component Signal Level
- Y 1Vp-p/75Ω
- Cb/Cr 0.7Vp-p/75Ω

Video Maximum Input Level 1.5Vp-p

Video Signal-to-Noise Ratio 50dB

Monitor Output Frequency Response
- Composite Video Signal ..... 5Hz – 10MHz, –3dB
- S-Video Signal ..... 5Hz – 10MHz, –3dB
- Component Signal ..... DC – 30MHz, –3dB

■ GENERAL

Power Supply
- U, C models ..... AC 120V, 60Hz
- A model ..... AC 240V, 50Hz
- B, G, L models ..... AC 230V, 50Hz
- R, T models ..... AC 110/120/220/240V, 50/60Hz

Power Consumption
- U model 260W
- C model 330VA/260W
- R, T, A, B, G, L models 260W

Standby Power Consumption
- U, C models 0.8W
- A, B, G, L models 0.9W

Maximum Power Consumption (R model only) 610W

AC Outlets
- U, L, G models, Switched x 2 ..... 100W max (Total)
- R, T models, Switched x 2 ..... 50W max (Total)
- C model, Switched x 2 ..... 100W max/1.0A max (Total)
- A, B models, Switched x 1 ..... 100W max

Dimensions (W x H x D) ..... 435 x 151 x 390mm (17-1/8" x 5-15/16" x 15-3/8")

Weight ..... 10.5 kg (23 lbs 2oz)

Finish
- RX-V620 ..... Black color (U, C, R, T, A models)
  Gold color (R, T, L models)
- RX-V620RDS ..... Black color (B, G models)
  Gold color (G model)
  Titanium color (G model)
- HTR-5460 ..... Black color (U, C, T, A models)
  Gold color (T models)

Accessories ..... AM loop antenna x 1
Indoor FM antenna x 1
PAL 75/300 socket x 1(B only)
Remote Control Transmitter x 1
Battery (size "AAA", "R03") x 4

** Specifications subject to change without notice.*

U ..... USA model
C ..... Canadian model
R ..... General model
T ..... China model
A ..... Australian model
B ..... British model
G ..... European model
L ..... Singapore model

● SUPERIMPOSING

Input DVD, etc.		Output	Superimposing
Terminal	Signal	Monitor connection	
S	O	O	O (On screen)
V	O	—	X
S	O	X	X
V	O	—	O (On screen)
S	O	O	O (On screen)
V	X	—	X
S	O	X	X
V	X	—	O (Blue back)
S	X	—	X
V	O	—	O (On screen)
S	X	—	O (Blue back)
V	X	—	O (Blue back)

S : S video signal
V : Composite video signal
O : YES
X : NO
— : NO CARE
Caution: Superimposing function is not usable for component signals.

● DIMENSIONS

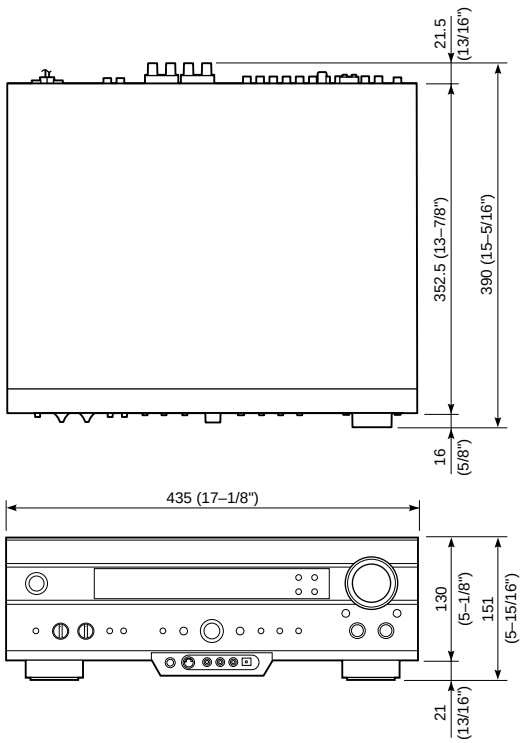

Units : mm (inch)

Manufactured under license from Dolby Laboratories. "Dolby Digital", "AC-3", "Pro Logic", and the double-D symbol ▯▯ are trademarks of Dolby Laboratories. © 1992-1997 Dolby Laboratories. All rights reserved.

Manufactured under license from Digital Theater Systems, Inc. US Pat. No. 5,451,942 and other world-wide patents issued and pending. "DTS", "DTS Digital Surround", are trademarks of Digital Theater Systems, Inc. copyright 1996 Digital Theater Systems, inc. All rights reserved.

● **SET MENU TABLE**

No.	SET MENU	PRESET VALUE	SETTING RANGES
1.	SPEAKER SET		
1A	CENTER SPEAKER	LARGE	LARGE/SMALL/NONE
1B	MAIN SPEAKER	LARGE	LARGE/SMALL
1C	REAR L/R SPEAKER	LARGE	LARGE/SMALL/NONE
1D	LFE/BASS OUT	BOTH	SUBWOOFER/MAIN/BOTH
1E	MAIN LEVEL	NORMAL	NORMAL/–10dB
2.	L/R BALANCE	0	L — 0 — R (0.5 step) (L/R 10.0)
3.	HP TONE CTRL	BASS : 0dB	–6dB — +3dB (1dB step)
		TREBLE : 0dB	–6dB — +3dB
4.	I/O ASSIGNING		
4A	COMPONENT VIDEO INPUT	[A] : DVD	DVD, D-TV/CBL, VCR1, VCR2/DVR, V-AUX
		[B] : D-TV/CBL	D-TV/CBL, VCR1, VCR2/DVR, V-AUX
4B	OPTICAL OUT	(1) : MD/CD-R	DVD, MD/CD-R, D-TV/CBL, VCR1, VCR2/DVR, V-AUX, PHONO, CD
4C	OPTICAL IN	(2) : MD/CD-R	CD, MD/CD-R, DVD, D-TV/CBL, VCR1, VCR2/DVR, PHONO
		(3) : DVD	CD, DVD, D-TV/CBL, VCR1, VCR2/DVR, PHONO
		(4) : D-TV/CBL	CD, D-TV/CBL, VCR1, VCR2/DVR, PHONO
4D	COAXIAL IN	(5) : CD	CD, MD/CD-R, DVD, D-TV/CBL, VCR1, VCR2/DVR, V-AUX, PHONO
5.	INPUT MODE	DVD : AUTO	AUTO/LAST
6.	DOLBY DIGITAL SET		
6A	LFE LEVEL	SPEAKER : 0dB	–20dB — 0dB
6B	DYNAMIC RANGE	SPEAKER : MAX	MAX/STD/MIN
7.	DTS SET		
	LFE LEVEL	SPEAKER : 0dB	–10dB — +10dB
8.	SPEAKER DELAY TIME	CENTER : 0ms	0ms — 5ms (1ms step)
9.	DISPLAY SET	BLUE BACK : AUTO	AUTO/OFF
		OSD SHIFT : 0	–5 — +5
		DIMMER : 0	–4 — 0
10.	MEMORY GUARD	OFF	ON/OFF

■ INTERNAL VIEW

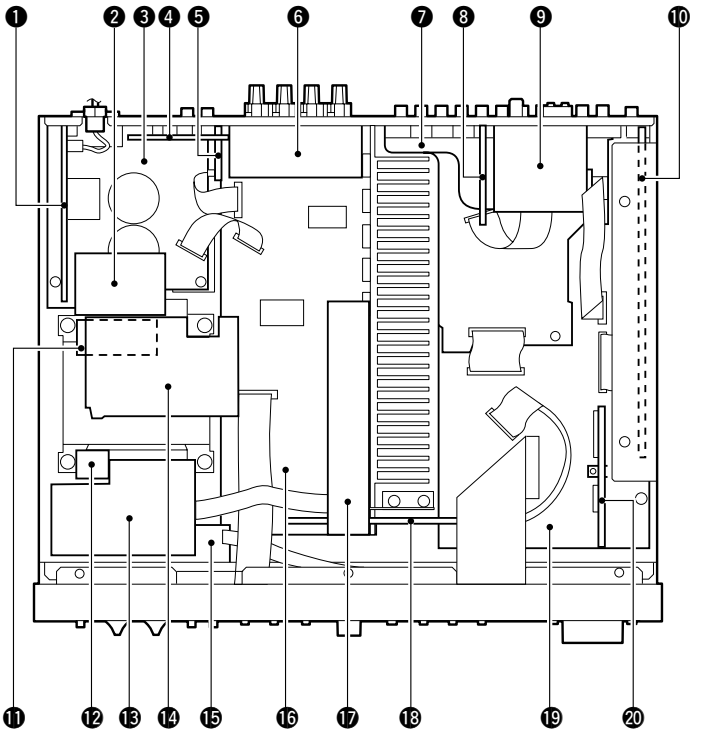

❶ POWER (1) P.C.B.
❷ MAIN (6) P.C.B.
❸ MAIN (5) P.C.B.
❹ POWER (4) P.C.B. (R, T only)
❺ MAIN (7) P.C.B. (B, G only)
❻ MAIN (3) P.C.B.
❼ OPERATION (3) P.C.B.
❽ OPERATION (5) P.C.B.
❾ AM/FM TUNER
❿ DSP P.C.B.
⓫ POWER (5) P.C.B. (U, C, A, B, G, L only)
⓬ OPERATION (9) P.C.B.
⓭ POWER (2) P.C.B.
⓮ POWER (6) P.C.B. (R, T only)
⓯ MAIN (4) P.C.B.
⓰ MAIN (1) P.C.B.
⓱ POWER (3) P.C.B.
⓲ MAIN (2) P.C.B.
⓳ INPUT (1) P.C.B.
⓴ INPUT (2) P.C.B.

■ DISASSEMBLY PROCEDURES (Remove parts in the order as numbered.)

1. Removal of Top Cover

Remove 8 screws (① and ②) and then remove the Top Cover in Fig. 1.

2. Removal of Front Panel Unit

a. Remove 9 screws (③, ④ and ⑤) in Fig. 1.
b. Remove CB104, CB303 and ground wire.
c. Lift 2 hooks and then remove the Front Panel Unit in Fig. 1.

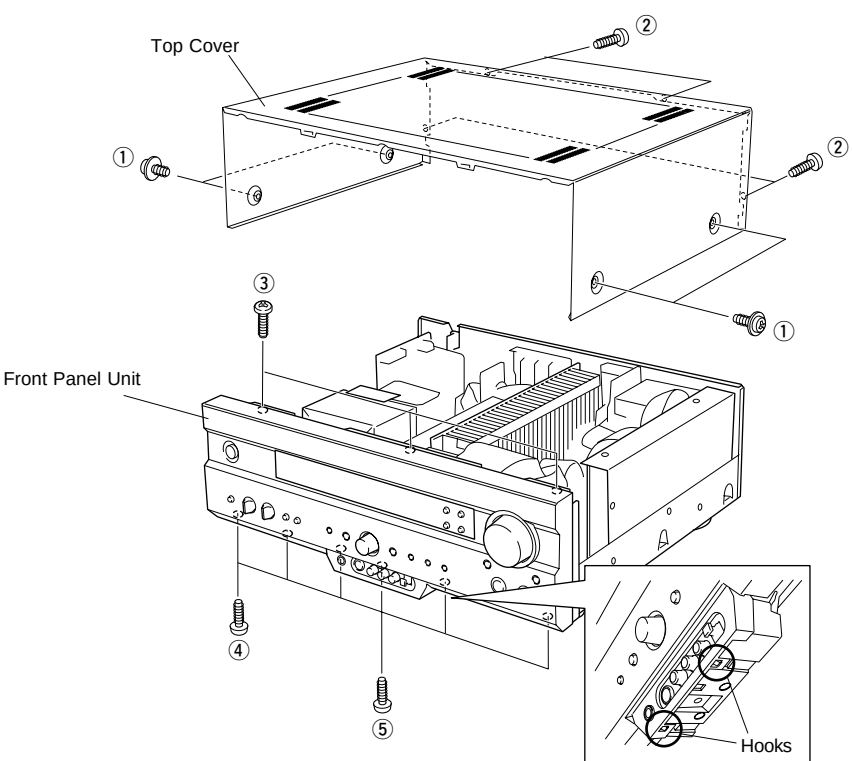

Fig. 1

3. Removal of Sub Chassis Unit

Remove 4 screws (⑥) and then remove the Sub Chassis Unit in Fig. 2.

4. Removal of DSP P.C.B.

a. Remove 4 screws (⑦) and then remove the Shield Case Cover in Fig. 3.
b. Remove 7 screws (⑧ and ⑨) and then remove the DSP P.C.B. in Fig. 3.

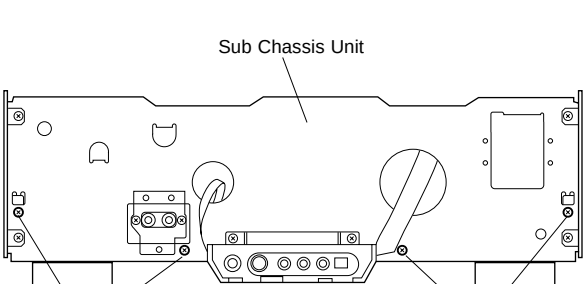

Fig. 2

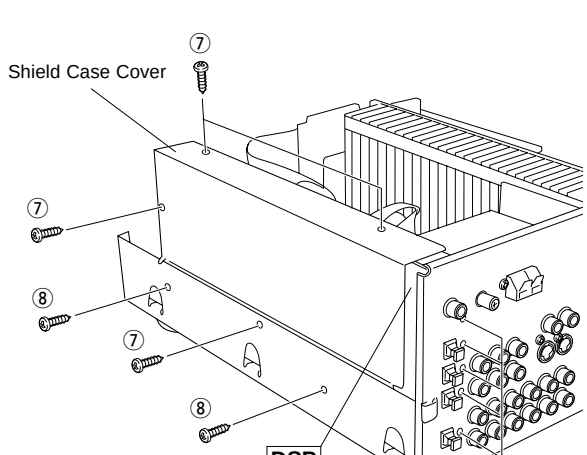

Fig.3

5. Removal of Input (1)/(2) P.C.B.

(Checking the Input (1)/(2) P.C.B. and Replacing Components)

a. Remove the DSP P.C.B.
b. Remove 3 screws (⑩) and then remove the AM/FM Tuner in Fig. 4.
c. Remove 2 screws (⑪) and then remove the Operation (5) P.C.B. in Fig. 4.
d. Remove 4 screws (⑫) and then remove the Operation (3) P.C.B. in Fig. 4.
e. Remove 7 screws (⑬ and ⑭) and then remove the Operation (2) P.C.B. in Fig. 4 and 5.
f. Remove 8 screws (⑮ and ⑯) and then remove the Input (1)/(2) P.C.B. in Fig. 4 and 5.
g. Place the INPUT (1)/(2) P.C.B. as shown in Fig. 6 and check them for operation.

Note :
When DSP P.C.B., INPUT (1) P.C.B., OPE (2)/(3)/(5) P.C.B., and AM/FM TUNER have been removed from the rear panel, the ground connection becomes open. Connect the ground of each P.C.B. to the chassis by using a lead wire.

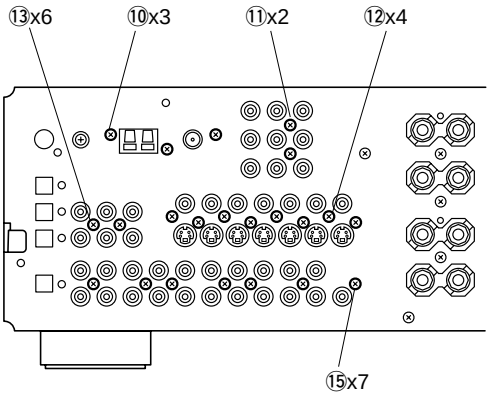

Fig. 4

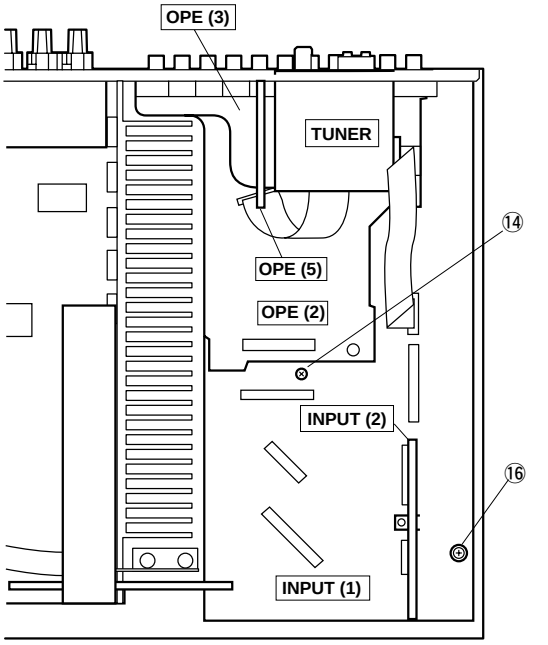

Fig. 5

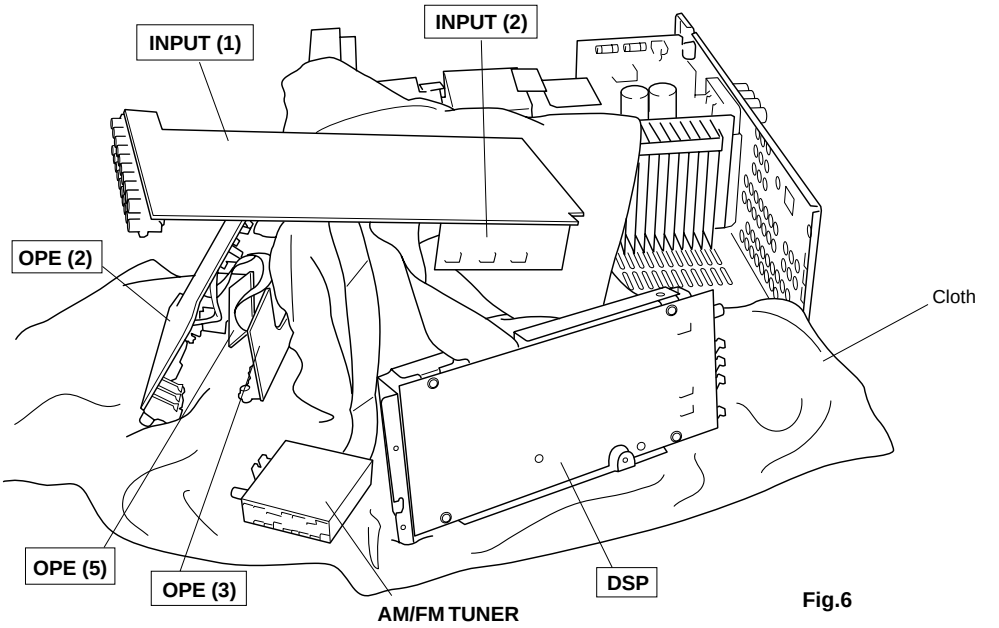

Fig.6

6. Removal of Main Chassis

(Checking the Main (1) P.C.B. and Replacing Components)

a. Remove the Front Panel Unit.
b. Remove the Sub Chassis Unit.
c. Remove the DSP P.C.B.
d. Remove the AM/FM Tuner, Operation (5)/(3)/(2) P.C.B. and Input (1)/(2) P.C.B.
e. Remove 6 screws (⑰, ⑱ and ⑲) and then remove the Main (5)/Power (1) P.C.B. in Fig. 7 and 8.
f. Remove 4 screws (⑳) and then remove the Power Transformer in Fig. 8.
g. Remove 4 screws (㉑, ㉒ and ㉓) and then remove the Main Chassis in Fig. 7 and 8.
h. Reinstall the removed P.C.B. to the Rear Panel and tighten them with screws.
i. Set the Rear Panel and Front Panel upright as shown in Fig. 9. At this time, use a box or the like to keep them horizontal. In this state, check the MAIN (1) P.C.B. and each of the other P.C.B. for operation.

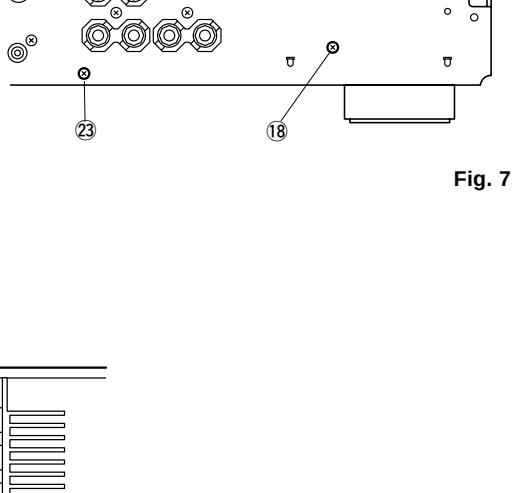

Fig. 7

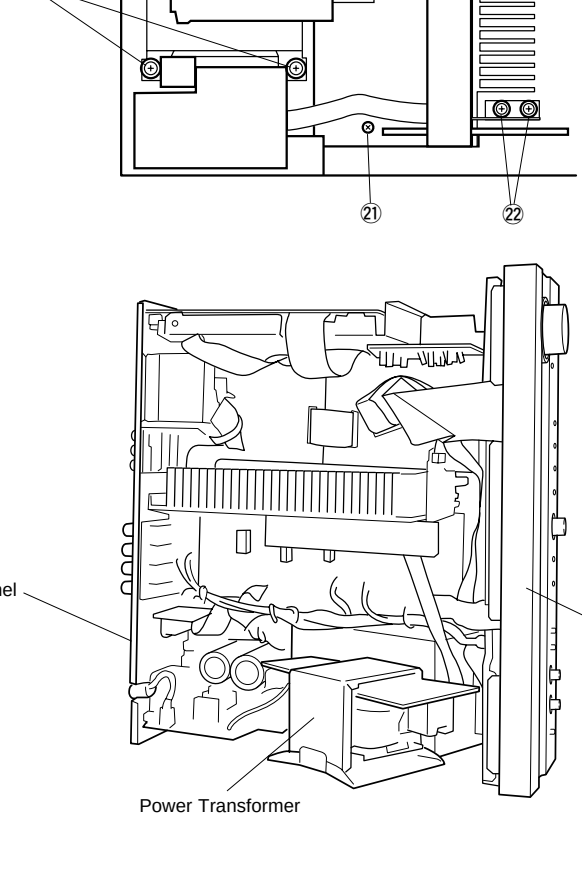

Fig.8

Use care so that the DSP Shield Case and INPUT (1)/(2) P.C.B. will not be shorted.

Fig.9

■ SELF DIAGNOSIS FUNCTION

This product has a built-in self diagnosis function (DIAG) to facilitate inspection, measurement and determination of a faulty item, if any. There are 14 DIAG menu items each of which has sub-menu items.
Listed in the table below are menu items and sub-menu items.
(Start-up and operation of DIAG menu are executed by using the main unit and its remote control unit.)

No.	DIAG menu	Sub-menu	Remote control code (key)
1	DSP THROUGH	1. ANALOG BYPASS	7A---88 (PRG 1)
		2. M, C, R, SW ch	7A---89 (PRG 2)
		3. Main HPF Check	7A---8A (PRG 3)
		4. DSP Full Bit	7A---91 (PRG 10)
		5. DSP Full Bit (F)	7A---92 (PRG 11)
		6. DSP Full Bit -6dB	7A---03 (TAPE STOP)
2	FRONT CH	1. Front Normal	7A---8B (PRG 4)
		2. Front Mix	7A---8C (PRG 5)
3	RAM THROUGH	1. 0dB (2ch/Multi)	7A---10 (PRESET +)
4	PRO LOGIC	1. YSS928	7A---8D (PRG 6)
5	MARGIN CHECK	1. MAIN 3dB margin	7A---11 (PRESET –)
		2. MAIN 12dB margin	7A---12 (P. PAGE)
		3. MAIN 18dB margin	7A---0C (CD FW)
6	MAIN MIX	1. Center → Main	7A---00 (TAPE PLAY)
		2. SW → Main	7A---8E (PRG 7)
7	OTHER INPUT	1. External Decoder	7A---8F (PRG 8)
8	DISPLAY CHECK	1. DISPLAY OFF	7A---01 (TAPE RW)
		2. DISPLAY ALL	7A---02 (TAPE FW)
		3. DISPLAY DIMMER(50%)	---------
		4. CHECKED PATTERN 1	---------
		5. CHECKED PATTERN 2	---------
9	MANUAL TEST	1. ALL	7A---90 (PRG 9)
		2. MAIN L	7A---04 (TAPE PAUSE)
		3. CENTER	7A---05 (TAPE MUTE)
		4. MAIN R	7A---06 (TAPE A/B)
		5. REAR R	7A---07 (TAPE DIR A)
		6. REAR L	7A---08 (CD PLAY)
		7. LFE	7A---09 (CD STOP)
10	FACTORY PRESET	1. INHIBIT (memory initialization inhibited)	---------
		2. RESERVED (memory initialized)	7A---57 (SLEEP)
11	AD DATA CHECK	1. PANEL KEY0, 1	---------
		2. PANEL KEY2, PL	---------
		3. DC PROTECTION, PS PROTECTION	7A---0B (CD SKIP –)
12	IF STATUS	1. Inside status	---------
		2. CH status 1	---------
		3. CH status 2	---------
		4. CH status 3	---------
		5. CH status 4	---------
		6. CH status 5	---------
		7. BSI-DD 1	---------
		8. BSI-DD 2	---------
		9. BSI-DD 3	---------
		10. BSI-DD 4	---------
		11. BSI-DTS 1	---------
		12. BSI-DTS 2	---------
		13. BSI-DTS 3	---------
		14. BSI-DTS 4	---------
		15. YSS928-1	---------
		16. YSS928-2	---------
		17. YSS928-3	---------
13	DSP RAM CHECK	1. BUS CHECK	7A---0A (CD SKIP +)
14	VERSION/SUM A: P:	1. Version	7A---0D (CD REW)
		2. SUM ALL/PROG	---------

● Starting DIAG

Press the “POWER” (STANDBY/ON) key of the main unit while pressing the “FM/AM” key and the “INPUT MODE” key simultaneously, and DIAG will be activated.

● Starting DIAG in the protection cancel mode

If the protection function activates and causes hindrance to trouble diagnosis, disable the protection function as described below, and it will be possible to enter the DIAG mode. (The protection function other than the excess current detect function will be disabled.)

Press the “POWER” (STANDBY/ON) key while pressing the “FM/AM” key and the “INPUT MODE” key simultaneously. At this time, keep pressing the “FM/AM” key and the “INPUT MODE” for 3 seconds or longer.

In this mode, “ SLEEP ” in the FL display of the main unit flashes.

CAUTION!
Using this product with the protection function disabled may cause damage to itself. Use special care for this point when using this mode.

● Canceling DIAG

Turn off the power by pressing the “POWER” (STANDBY/ON) key of the main unit or the “STANDBY” key of the remote control unit.

CAUTION: When canceling this function, check that DIAG menu No.10 FACTORY PRESET (memory initialization inhibited/reserved) has been set. [To keep the user memory, be sure to select “INHI” (initialization inhibited) from the No.10 PRESET menu before canceling the DIAG function.]

● Display at the start of DIAG

The diagnostic menu appears on the monitor screen. (It remains on the display until it is canceled.)

```
DIAGNOSTIC MENU

1.DSP THR      8.DISP CHECK
2.FRONT CH     9.MANL TEST
3.RAM THR      10.PRESET
4.PRO LOGIC    11.AD DATA
5.MARGIN       12.STATUS
6.MAIN MIX     13.DSP RAM
7.OTHER INP    14.VER/SUM
```

On the FL display of the main unit, an opening message (including the version and the protection history) appears for a few seconds followed by the diagnostic menu display of 1. ANALOG BYPAS.

Opening message

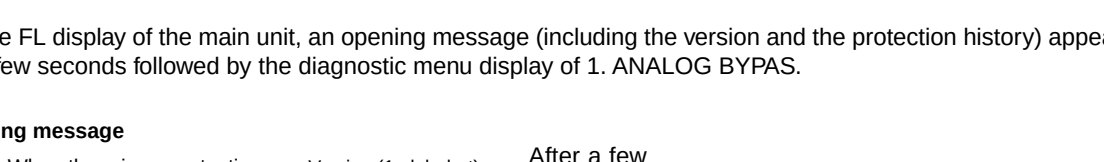

(*1) If a protection function history has been recorded, the type of the protection function and the voltage value recorded last are displayed.

If the protection function activates after DIAG has been started and the power is turned off ;
When the protection function (*2) activates, the protection function history appears on the display and the power turns off. Repair the faulty parts according to the displayed history.

(*2) When an excess current or any other faulty condition is found with the power source, DC, etc., the protection function forces the power to turn off.

```
I PROTECT   X
```

I PROTECT display
(When the power is turned on without this abnormality corrected, the protection function activates the moment the power relay is turned on to shut off the power relay. The display will not light.)
Cause: There is an abnormal current flow to the power amplifier.
Supplementary information: As the current of the power transistor of each channel is detected, the abnormal channel can be identified by checking the current detect transistor.

```
PS PRT :000 X
```

PS PRT display
(When the power is turned on without this abnormality corrected, the protection function activates about 1 second later to shut off the power relay. Display may not light if there is an abnormality with the power supply for the display.)
Cause: There is an abnormality in the power supply section (voltage).
Supplementary information: As the power from the following sources is detected, it is possible to determine where an abnormality exists.

Main (5): Transformer secondary winding
CB373 (AC voltage)

Power (3): Regulated power supplies
±12, ±5V, +5D

```
DC PRT :000 X
```

DC PRT display
(When the power is turned on without this abnormality corrected, the protection function activates about 3 seconds later to shut off the power relay.)
Cause: A DC output from the power amplifier of any channel is detected.

Besides the above possible causes, the cause may be a disconnected connector or around the CPU.
PS PRT and DC PRT displays include the abnormal A/D value in % (voltage value obtained by considering 5V as 100%). Concerning this value, refer to DIAG menu No.11 AD DATA CHECK described on page 26.

● **Protection history**
When the protection function has activated, its history is stored in memory with a memory backup. Even when no abnormality is noted while the unit is being serviced, an abnormality which has occurred previously can be defined as long as the backup data has been stored. The protection history should always be cleared before returning the unit from service.
The protection history is cleared when DIAG is canceled by selecting “RSRV” (memory initialization) from the setting items of the DIAG menu No.10 FACTORY PRESET or when the backup data is erased.

● Operation procedure of DIAG menu and SUB-MENU

There are 14 MENU items and some SUB-MENU items as well.

DIAG menu selection

Main unit: Jog dial ▷(forward)/◁(reverse)

Remote control unit: Cursor ∨(forward)/∧(reverse) key

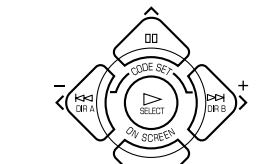

SUB-MENU selection

Main unit: DSP PROGRAM (forward)/EFFECT (reverse) key

Remote control unit: Cursor >(forward)/<(reverse) key

Only the remote control keys indicated in the Menu List can be used to select a sub menu directly.

● Functions available during DIAG

In addition to the DIAG menu, functions as listed below are available.

- Input selection, 6CH input
- Center/Rear/Sub-woofer level adjustment
- Muting
- Power on/off operation
- Master volume

* It is possible to confirm Menu No.12 “IF STATUS” while keeping the signal process (operation status) of each DIAG menu by using the INPUT MODE key of the main unit.

● Initial settings used to start DIAG function

Following initial settings are used when starting the DIAG function.

When the DIAG function is canceled, the settings before starting DIAG will be restored.

• Input	: DVD (6CH INPUT OFF)
• Master volume	: -40dB
• Center/Rear/Sub-woofer level	: 0dB
• Audio mute	: OFF
• Speaker settings	
MAIN	: LARGE
CENTER	: LARGE
REAR	: LARGE
BASS OUT	: BOTH
MAIN LEVEL	: Normal (0dB)
• DIAG menu	: DSP THROUGH (1. ANALOG BYPASS)

Details of DIAG menu

1. DSP THROUGH

There are 6 sub menu items.

1.ANALOG BYPAS

ANALOG BYPAS [Remote control code: 7A—88(PRG 1)]

- The input mode is fixed to use the analog (A/D) system.
- The L/R signal is output through the analog bypass without using the DSP section.
- C/SWFR and RL/RR signals are output through DSP (see the signal path in the figure below) without using the external DRAM. (Head margin included)

Head margin

CENTER:	0 dBFS
FL/FR:	Mute
RL/RR:	-12 dBFS
SWFR:	Add L/R signal at -20 dBFS.

Reference

INPUT : DVD ANALOG

SWFR: 50Hz, Others: 1kHz

	SPEAKERS			
Condition	**MAIN L/R**	**CENTER**	**REAR L/R**	**SWFR**
Both ch, -26 dBV, volume 0dB	16 dBV	- ∞ dBV	- ∞ dBV	- ∞ dBV

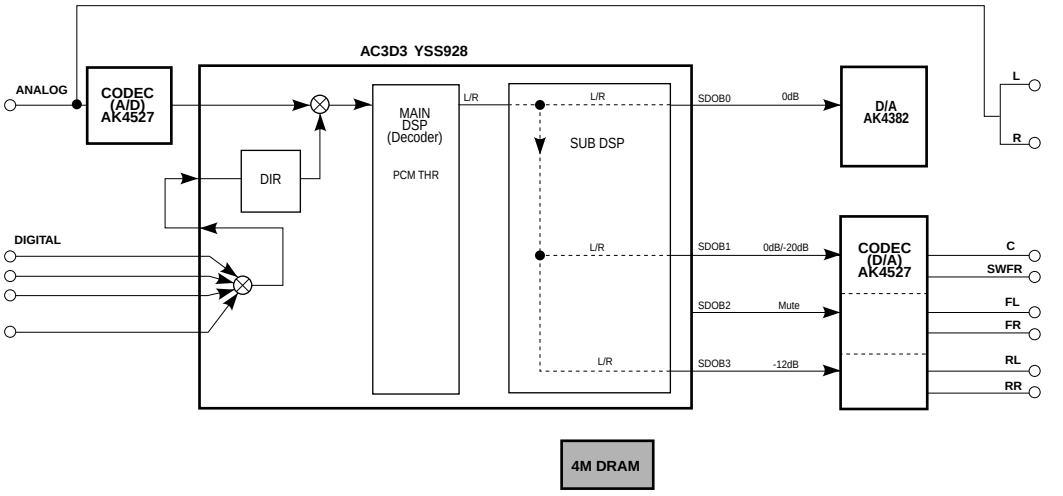

Note: (SDOxx) represents a terminal name of AC3D3.

The shaded square ( ) means that the element included in it does not operate.

1.M C R SW CH

M, C, R, SW CH [Remote control code: 7A—89 (PRG 2)]

- The input signal is automatically identified and switched in the priority order of dts → DOLBY DIGITAL → PCM AUDIO → Analog (A/D) according to the signal detection.
- L/R, C/SWFR and RL/RR signals are output through DSP (see the signal path in the figure below) without using the external DRAM. (Head margin included)

Head margin

MAINL/R:	0 dBFS
CENTER:	0 dBFS
FL/FR:	Mute
RL/RR:	-12 dBFS
SWFR:	Add L/R signal at -20 dBFS.

Reference

INPUT : DVD ANALOG

SWFR: 50Hz, Others: 1kHz

	SPEAKERS			
Condition	**MAIN L/R**	**CENTER**	**REAR L/R**	**SWFR**
Both ch, -26 dBV, volume 0dB	18.6 dBV	19.2 dBV	19.0 dBV	- 4.0 dBV

(In the case of 2-ch source)

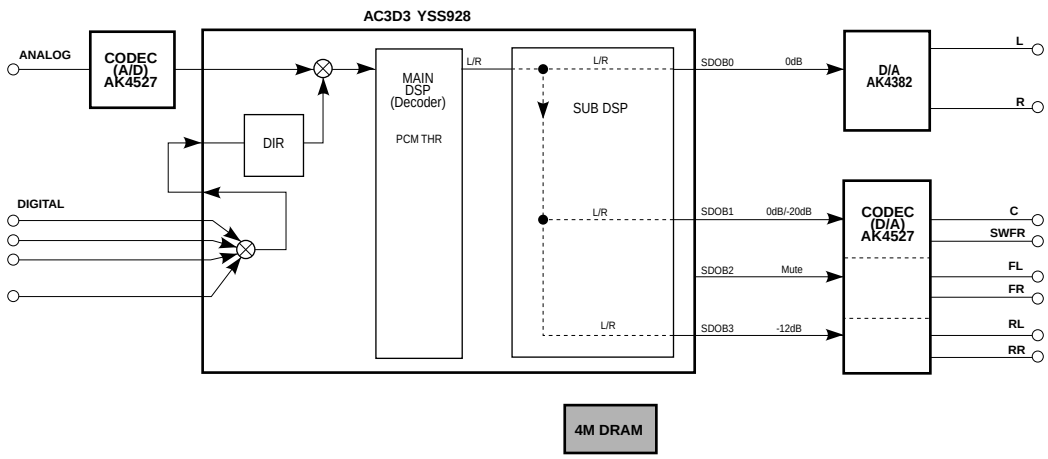

(In the case of multi-ch source)

- AC3D3 outputs signals using DOLBY DIGITAL/dts decode operation.

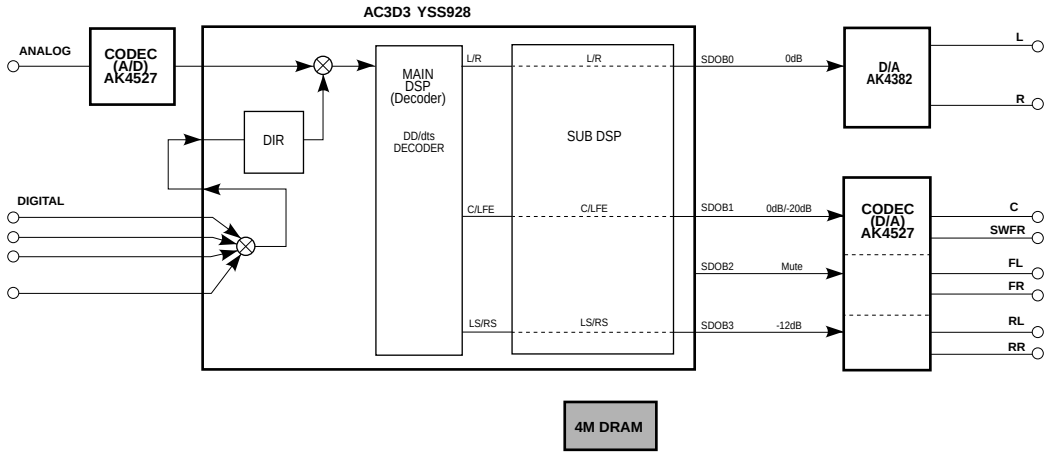

Note: (SDOxx) represents a terminal name of AC3D3.

The shaded square ( ) means that the element included in it does not operate.

1.MAIN HPF

MAIN HPF [Remote control code: 7A—8A (PRG 3)]
MAIN HPF is turned on and output. (Head margin included)

Head margin

MAIN L/R:	0/-3/-12/-18 dBF
CENTER:	Mute
FL/FR:	Mute
RL/RR:	Mute
SWFR:	Mute

Reference
INPUT : DVD ANALOG
SWFR: 50Hz, Others: 1kHz

Condition	SPEAKERS MAIN L/R	CENTER	REAR L/R	SWFR
Both ch, -26 dBV, volume 0dB	18.6 dBV	- ∞ dBV	- ∞ dBV	- ∞ dBV

(2ch/Multi) ***Multi: Lo/Ro Down Mix**

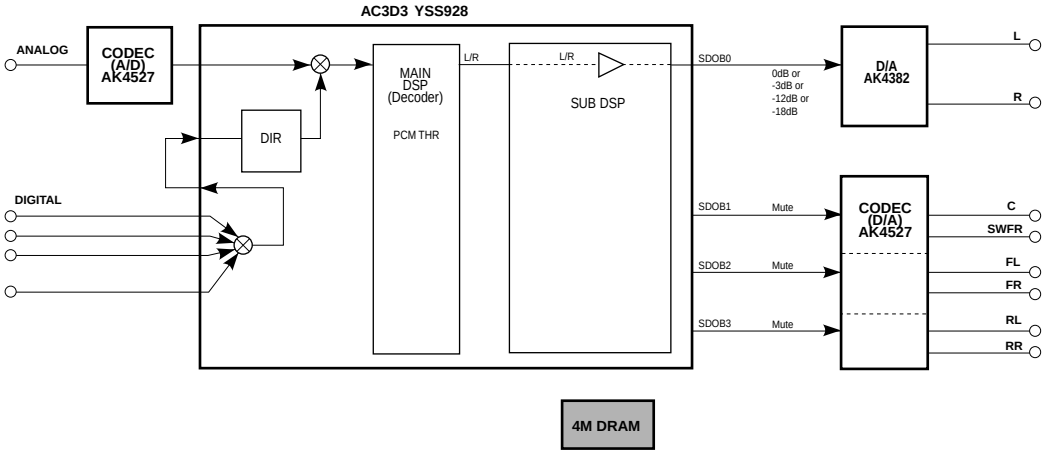

Note: (SDOxx) represents a terminal name of AC3D3.
The shaded square ( ) means that the element included in it does not operate.

1.FULL BIT

FULL BIT [Remote control code: 7A—91 (PRG 10)]
- The head margin is unused and the digital data is output in full bit.
- The same applies as “M, C, R, SW CH” except that the digital data is output in full bit at D/A .

Reference
INPUT : DVD ANALOG
SWFR: 50Hz, Others: 1kHz

Condition	SPEAKERS MAIN L/R	CENTER	REAR L/R	SWFR
Both ch, -26 dBV, volume 0dB	18.6 dBV	19.2 dBV	19.0 dBV	- 4.0 dBV

1.FULL BIT F

FULL BIT F [Remote control code: 7A—92 (PRG 11)]
The front channel signal is output in full bit to the main channel.

Reference
INPUT : DVD ANALOG
SWFR: 50Hz, Others: 1kHz

Condition	SPEAKERS MAIN L/R	CENTER	REAR L/R	SWFR
Both ch, -26 dBV, volume 0dB	19.2 dBV	- ∞ dBV	- ∞ dBV	- ∞ dBV

(In the case of 2-ch source)

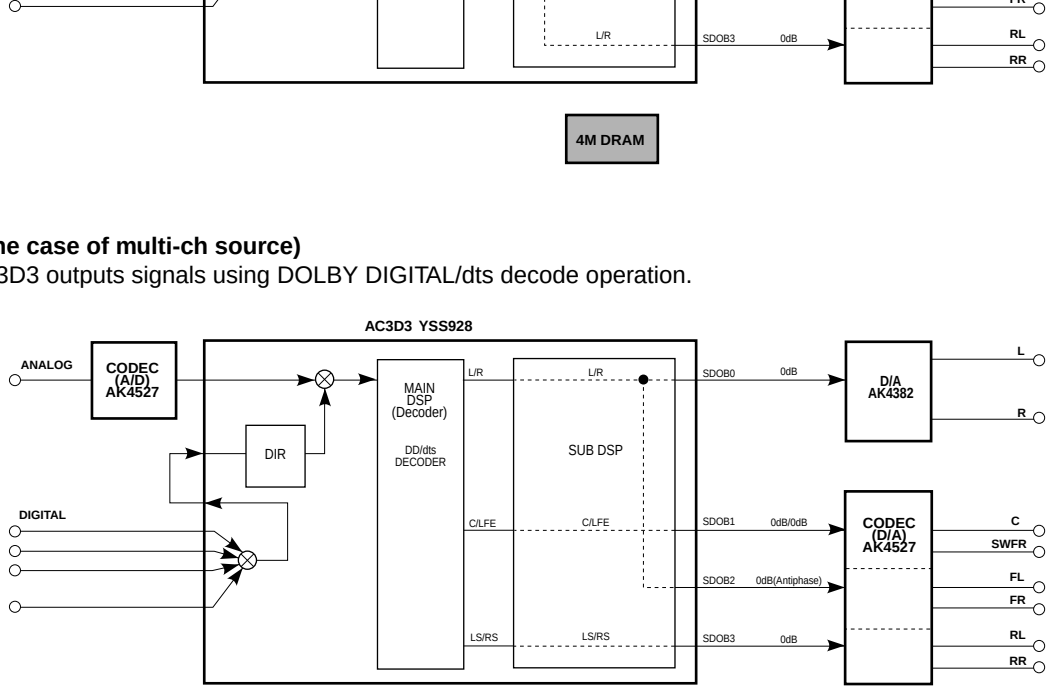

(In the case of multi-ch source)
• AC3D3 outputs signals using DOLBY DIGITAL/dts decode operation.

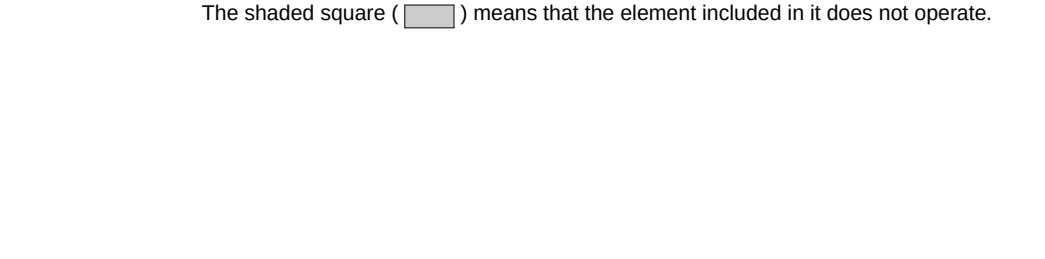

Note: (SDOxx) represents a terminal name of AC3D3.
The shaded square ( ) means that the element included in it does not operate.

1.FULL BIT-6DB

FULL BIT-6dB [Remote control code: 7A—03 (TAPE STOP)]
The head margin is included and the digital data is output in half bit.

Head margin

MAIN L/R:	-6 dBFS
CENTER:	-6 dBFS
FL/FR:	Mute
RL/RR:	-6 dBFS
SWFR:	Add L/R signal at -6 dBFS.

Reference

INPUT : DVD ANALOG

SWFR: 50Hz, Others: 1kHz

	SPEAKERS			
Condition	**MAIN L/R**	**CENTER**	**REAR L/R**	**SWFR**
Both ch, -26 dBV, volume 0dB	18.6 dBV	19.2 dBV	19.0 dBV	-4.0 dBV

(In the case of 2-ch source)

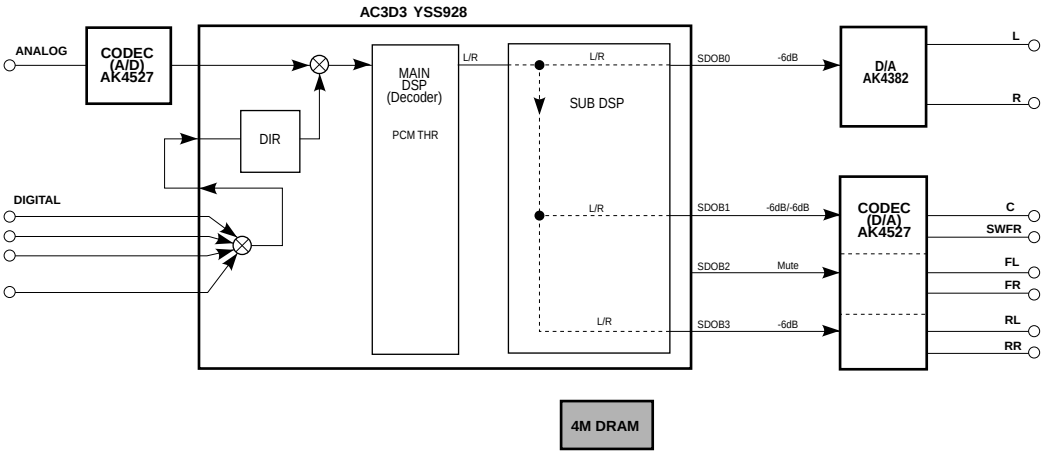

(In the case of multi-ch source)

• AC3D3 outputs signals using DOLBY DIGITAL/dts decode operation.

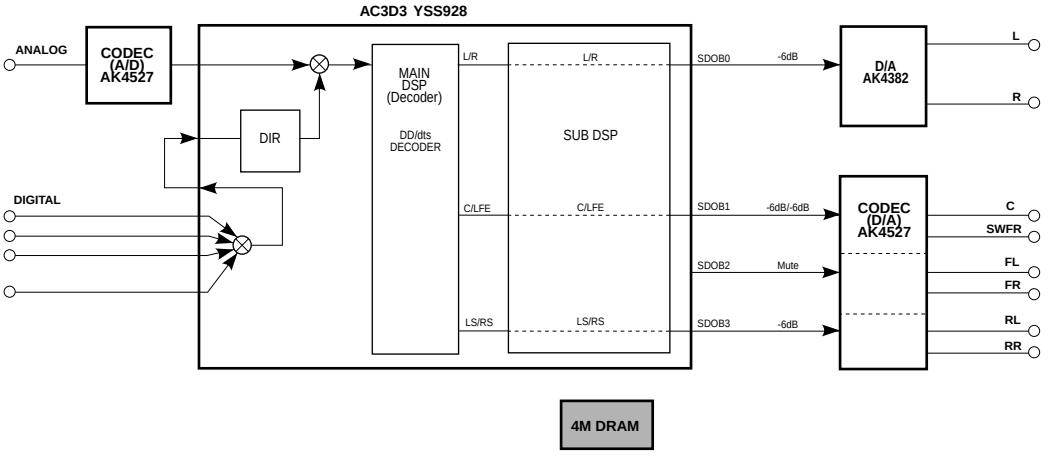

Note: (SDOxx) represents a terminal name of AC3D3.
The shaded square ( ) means that the element included in it does not operate.

2. FRONT CH

- The input signal is automatically identified and switched in the priority order of dts → DOLBY DIGITAL → PCM AUDIO → Analog (A/D) according to the signal detection.
- The front channel signal is output to the main channel.
- Signals are output through DSP (see the signal path in the figure below) without using the external DRAM. (Head margin included)

2.FRONT NORMAL

NORMAL [Remote control code: 7A—8B (PRG 4)]

The head margin is included and the front channel signal is output to the main channel.

Head margin

MAIN L/R:	Mute
CENTER:	Mute
FL/FR:	-6 dBFS
RL/RR:	Mute
SWFR:	Mute

Reference

INPUT : DVD ANALOG

SWFR: 50Hz, Others: 1kHz

	SPEAKERS			
Condition	**MAIN L/R**	**CENTER**	**REAR L/R**	**SWFR**
Both ch, -26 dBV, volume 0dB	19.2 dBV	- ∞ dBV	- ∞ dBV	- ∞ dBV

2.FRONT MIX

MIX [Remote control code: 7A—8C (PRG 5)]

The head margin is included and the front channel signal is output to the main channel in the mixed state.

Head margin

MAIN L/R:	0 dB
CENTER:	Mute
FL/FR:	-6 dBFS
RL/RR:	Mute
SWFR:	Mute

Reference

INPUT : DVD ANALOG

SWFR: 50Hz, Others: 1kHz

	SPEAKERS			
Condition	**MAIN L/R**	**CENTER**	**REAR L/R**	**SWFR**
Both ch, -26 dBV, volume 0dB	25.2 dBV	- ∞ dBV	- ∞ dBV	- ∞ dBV

(2ch/Multi) ***Multi: Lo/Ro Down Mix**

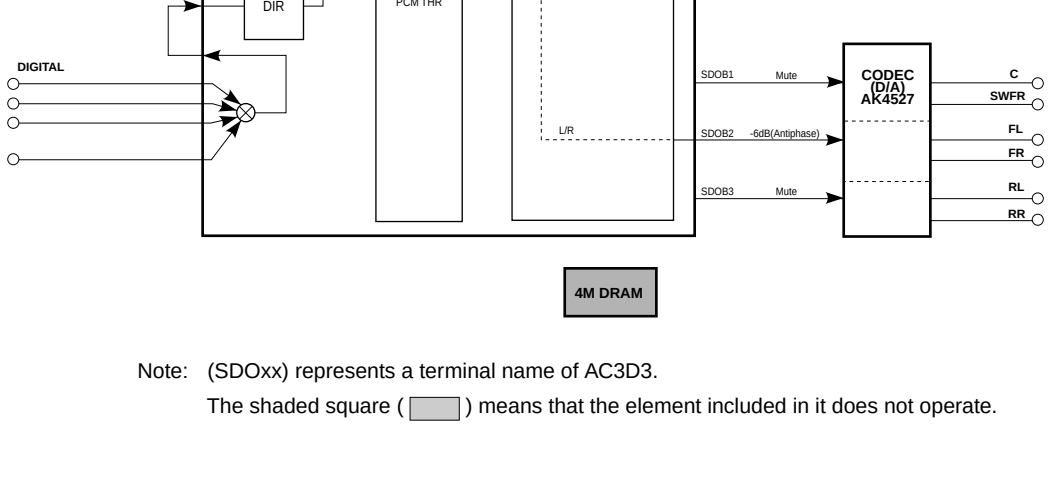

Note: (SDOxx) represents a terminal name of AC3D3.

The shaded square ( ) means that the element included in it does not operate.

3. RAM THROUGH

- The input signal is automatically identified and switched in the priority order of dts → DOLBY DIGITAL → PCM AUDIO → Analog (A/D) according to the signal detection.
- C, RL/RR and FL/FR signals are output through the external DRAM.

3.RAM 0dB

RAM 0dB [Remote control code: 7A—10 (TUNER PRESET +)]

Reference

INPUT : DVD ANALOG

SWFR: 50Hz, Others: 1kHz

Condition	SPEAKERS MAIN L/R	CENTER	REAR L/R	SWFR
Both ch, -26 dBV, volume 0dB	- ∞ dBV	19.2 dBV	- ∞ dBV	- ∞ dBV

(2ch/Multi) ***Multi: Lo/Ro Down Mix**

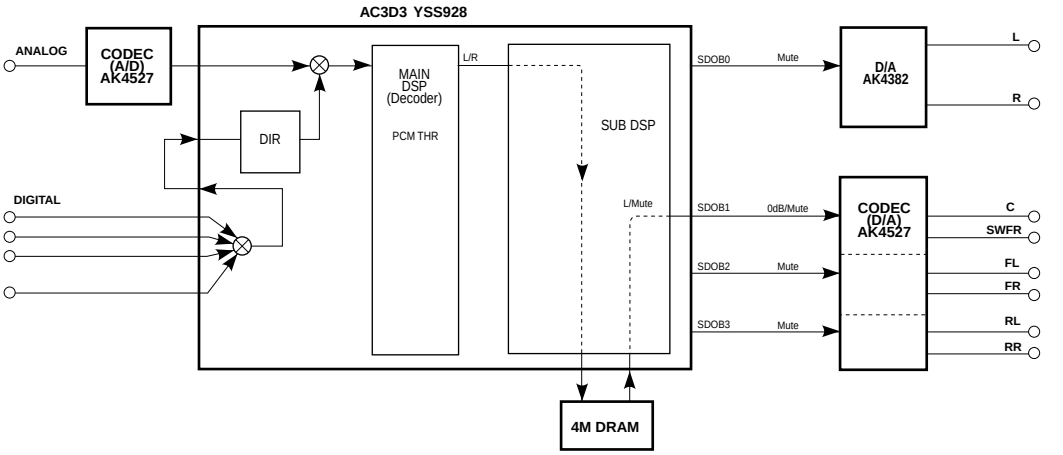

4. PRO LOGIC

- The input signal is automatically identified and switched in the priority order of dts → DOLBY DIGITAL → PCM AUDIO → Analog (A/D) according to the signal detection.
- The operation conforms to the ordinary DOLBY Normal sound field.

4.PRO LOGIC

PRO LOGIC [Remote control code: 7A—8D (PRG 6)]

AC3D3 outputs signals using PRO LOGIC decoding operation with the auto input balance off.

Reference

INPUT : DVD ANALOG

SWFR: 50Hz, Others: 1kHz

Condition	SPEAKERS MAIN L/R	CENTER	REAR L/R	SWFR
Both ch, -26 dBV, volume 0dB	-15.2 dBV	22.2 dBV	- 3 dBV (Noise)	- ∞ dBV

(2ch) ***Multi: All Mute**

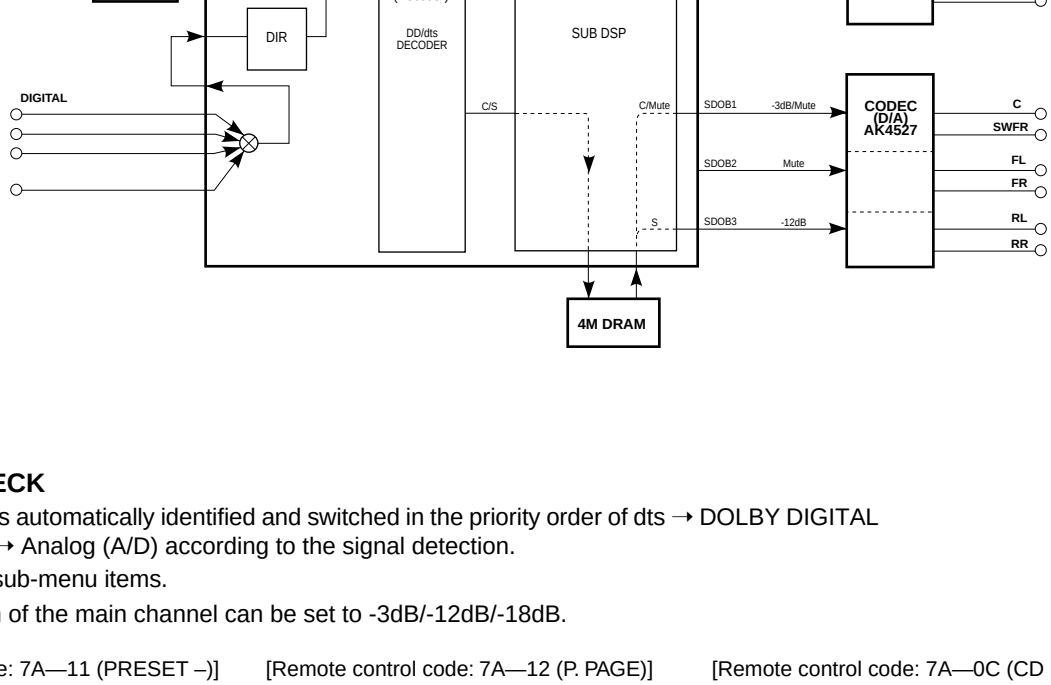

5. MARGIN CHECK

- The input signal is automatically identified and switched in the priority order of dts → DOLBY DIGITAL → PCM AUDIO → Analog (A/D) according to the signal detection.
- There are three sub-menu items.
- The head margin of the main channel can be set to -3dB/-12dB/-18dB.

[Remote control code: 7A—11 (PRESET –)]

5.MAIN 3DB

[Remote control code: 7A—12 (P. PAGE)]

5.MAIN 12DB

[Remote control code: 7A—0C (CD FW)]

5.MAIN 18DB

Reference

INPUT : DVD ANALOG

SWFR: 50Hz, Others: 1kHz

Sub-menu		Condition	SPEAKERS MAIN L/R	CENTER	REAR L/R	SWFR
1	MAIN 3dB	Both ch, -26 dBV, volume 0dB	18.5 dBV	- ∞ dBV	- ∞ dBV	- ∞ dBV
2	MAIN 12dB	Both ch, -26 dBV, volume 0dB	18.5 dBV	- ∞ dBV	- ∞ dBV	- ∞ dBV
3	MAIN 18dB	Both ch, -26 dBV, volume 0dB	18.5 dBV	- ∞ dBV	- ∞ dBV	- ∞ dBV

(2ch/Multi) ***Multi: Lo/Ro Down Mix**

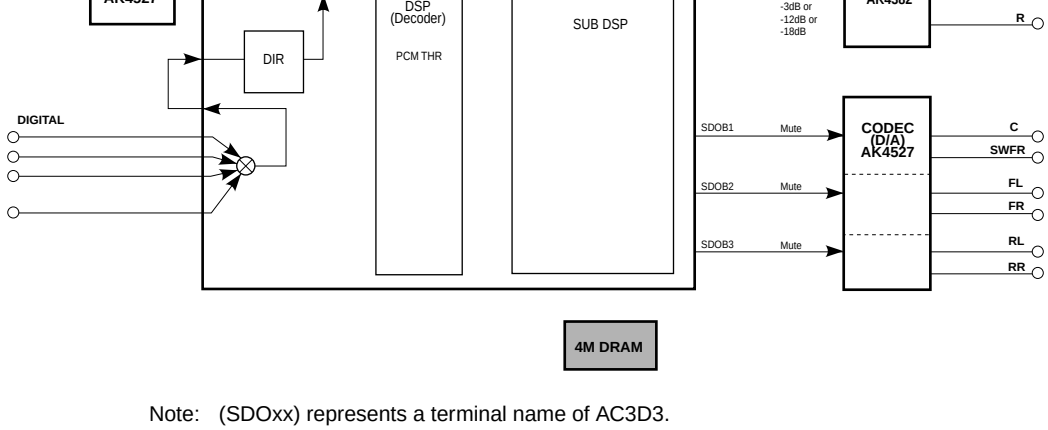

Note: (SDOxx) represents a terminal name of AC3D3.

The shaded square ( ) means that the element included in it does not operate.

6. MAIN MIX

- The input signal is automatically identified and switched in the priority order of dts → DOLBY DIGITAL → PCM AUDIO → Analog (A/D) according to the signal detection.
- There are two sub-menu items.
- The center and SW signals are output through the main channel.

6.CENTER->MAIN

CENTER -> MAIN [Remote control code: 7A—00 (TAPE PLAY)]
The center signal is output through the main channel.

Reference
INPUT : DVD ANALOG
SWFR: 50Hz, Others: 1kHz

Condition	SPEAKERS MAIN L/R	CENTER	REAR L/R	SWFR
Both ch, -26 dBV, volume 0dB	16.8 dBV	19.2 dBV	- ∞ dBV	- ∞ dBV

(2ch/Multi) ***Multi: Lo/Ro Down Mix**

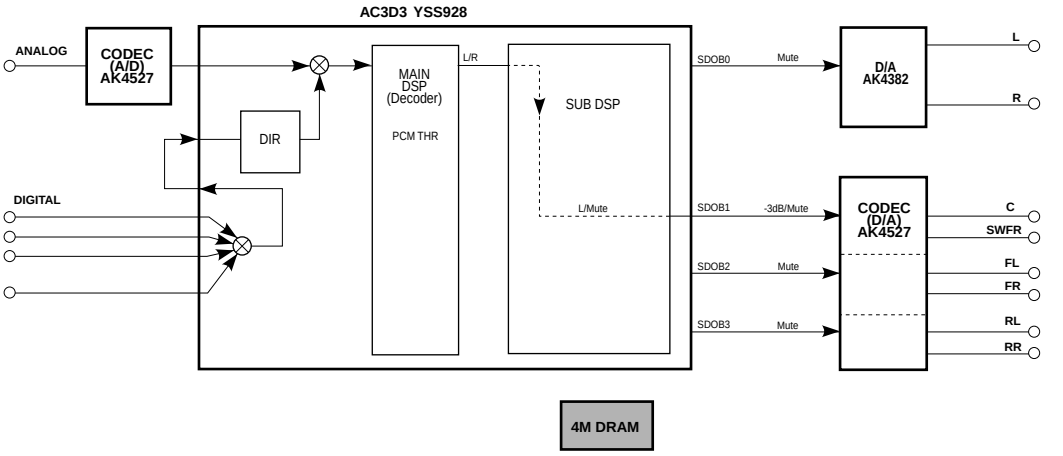

6. SW ->MAIN

SW -> MAIN [Remote control code: 7A—8E (PRG 7)]
The SW signal is output through the main channel.

Reference
INPUT : DVD ANALOG
SWFR: 50Hz, Others: 1kHz

Condition	SPEAKERS MAIN L/R	CENTER	REAR L/R	SWFR
Both ch, -26 dBV, volume 0dB	- 5.2 dBV	- ∞ dBV	- ∞ dBV	- 4.0 dBV

(2ch/Multi) ***Multi: Lo/Ro Down Mix**

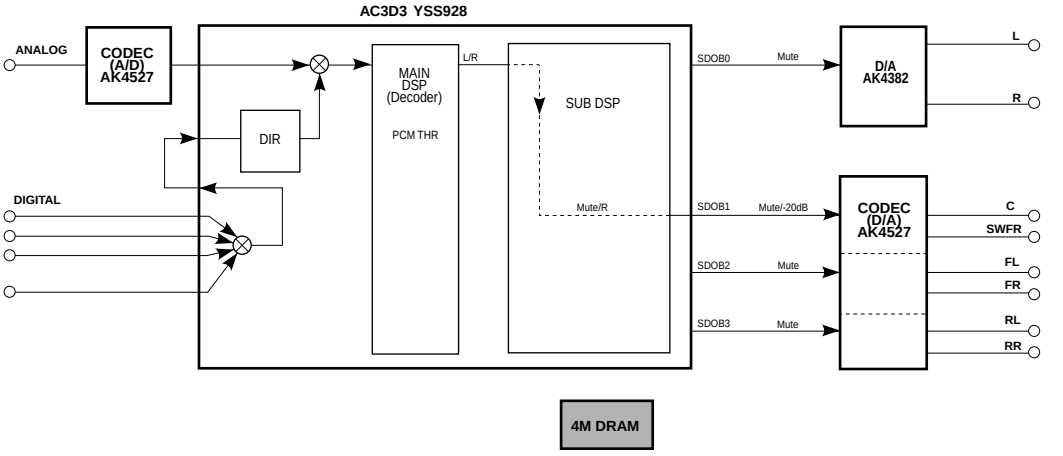

Note: (SDOxx) represents a terminal name of AC3D3.
The shaded square ( ) means that the element included in it does not operate.

7. OTHER INPUT

The signal input through the 6CH INPUT terminals is output.

7.EXTERNAL DEC

EXTERNAL DEC [Remote control code: 7A—8F (PRG 8)]

Reference

INPUT : 6CH INPUT

SWFR: 50Hz, Others: 1kHz

Condition	SPEAKERS			
	MAIN L/R	CENTER	REAR L/R	SWFR
Both ch, -26 dBV, volume 0dB	19.5 dBV	19.5 dBV	19.5 dBV	- 3.5 dBV

8. DISPLAY CHECK

- This program is used to check the lighting of the FL display which changes as shown below according to the sub-menu selected.
- The signals are processed using EFFECT OFF. (The L/R signals are output using the ANALOG MAIN BYPASS setting.)
- Except for the initial display, 128 pictographs for checking the OSD driver are used for the video signal output display (monitor screen).

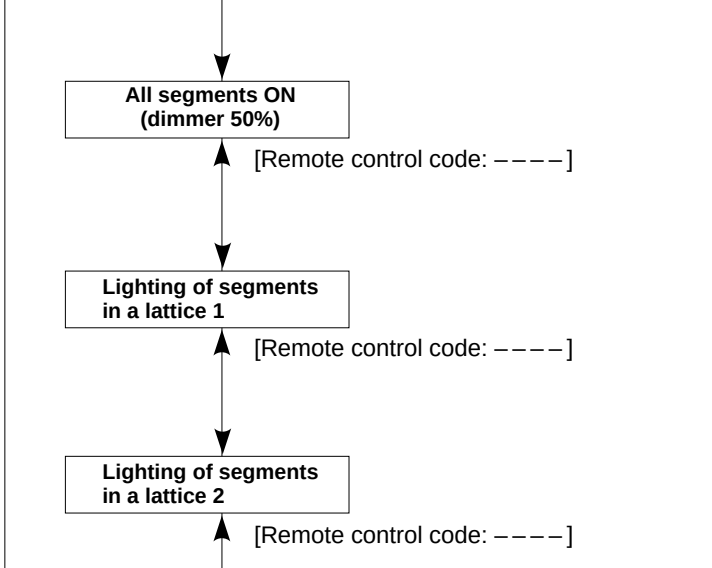

Segment conditions of the FL driver (IC502) and the FL tube are checked by turning ON and OFF all segments. Next, the operation of the FL driver is checked by using the dimmer control. Then a short between segments next to each other is checked by turning ON and OFF all segments alternately (in a lattice).

9. MANUAL TEST

The test noise is output by the noise generator with a built-in DSP from the channels specified by the sub-menu. There are seven sub-menu items.
The noise frequency is 35 - 250Hz for LFE and 800Hz as the center frequency otherwise.

9. TEST ALL

ALL [Remote control code: 7A—90 (PRG 9)]
Noise is output from all channels.
MAIN L [Remote control code: 7A—04 (TAPE PAUSE)
Noise is output from the MAIN L channel.
CENTER [Remote control code: 7A—05 (TAPE MUTE)]
Noise is output from the CENTER channel.
MAIN R [Remote control code: 7A—06 (TAPE A/B)]
Noise is output from the MAIN R channel.
REAR R [Remote control code: 7A—07 (TAPE DIR A)]
Noise is output from the REAR R channel.
REAR L [Remote control code: 7A—08 (CD PLAY)]
Noise is output from the REAR L channel.
LFE [Remote control code: 7A—09 (CD STOP)]
Noise is output from the LFE (sub-woofer) channel.

10. FACTORY PRESET

This menu reserves and inhibits initialization of the back-up RAM (parameter, set menu contents, etc. for the sound field program).
The signals are processed using EFFECT OFF. (The L/R signals are output using ANALOG MAIN BYPASS setting.)

10.PRESET INHI

INHI (Initialization inhibited) [Remote control code: ––––]
RAM initialization is not executed. Select INHI to protect the values set by the user.

10.PRESET RSRV

RSRV (Initialization reserved) [Remote control code: 7A—57 (SLEEP)]
Initialization of the back-up RAM is reserved. RSRV should be selected when shipping out of the factory or resetting RAM. Protection history is also cleared.

* In order to ensure that back-up RAM be initialized without fail, turn off the power and then on by pressing the POWER (STANDBY/ON) key after selecting RSRV. Initialization is executed at this point.

CAUTION : Before setting to the PRESET RSRV, write down the existing preset memory content of the Tuner in a table as shown below. (This is because setting to the PRESET RSRV will cause the user memory content to be erased.)

Preset group	P1	P2	P3	P4	P5	P6	P7	P8
A								
B								
C								
D								
E								

● **PRESET STATIONS**

STATION		FM FACTORY PRESET DATA (MHz)			STATION		AM FACTORY PRESET DATA (kHz)	
PAGE	NO.	U, C, R, T	R, T, L, G, B, A	J	PAGE	NO.	U, C, R, T	R, T, L, G, B, A, J
A/C/E	1	87.5	87.5	76.0	B/D	1	630	630
	2	90.1	90.1	83.0		2	1080	1080
	3	95.1	95.1	84.0		3	1440	1440
	4	98.1	98.1	86.0		4	530	531
	5	107.9	108.0	90.0		5	1710	1611
	6	88.1	88.1	78.0		6	900	900
	7	106.1	106.1	88.0		7	1350	1350
	8	107.9	108.0	82.1		8	1400	1404

11. AD DATA

The sub-menu of this menu displays the A/D conversion value of the CPU (operation circuit board IC501) which detects the keys and protection functions of the main unit in %. (reference voltage 5V: 100%)
When in KY0/KY1/KY2 page, it is not possible to operate the keys of the main unit because the values of all keys are detected. But one click on the VOLUME of the main unit will cancel this function and sets to the next sub-menu. The signal processing state remains the same as that before executing this menu.

K0:100 K1:100

KY0/KY1 (Detection of key scan)[Remote control code: – – – –]

KY0/KY1: Panel key of the main unit (10% step)

K2:100 PL:020

KY2/PL (Detection of key scan/Power limit)[Remote control code: – – – –]

KY2: Panel key of the main unit (10% step)
PL: The value of the power limit (10% step)

• When the standard value is deviated by ±4%, KEY A/D fails to function properly. In this case, check the circuit voltages, soldering condition, etc.

Indicate	KY0
0	PTY SEEK
10	PTY START
20	EON
30	RDS MODE
40	–
50	–
60	–
70	–
80	–
90	–
100	KEY OFF state

Indicate	KY1
0	EFFECT
10	DSP PROGRAM
20	EDIT PRESET
30	FM/AM
40	MEMORY
50	TUNING MODE
60	–
70	–
80	–
90	–
100	KEY OFF state

Indicate	KY2
0	INPUT MODE
10	INPUT ◁
20	INPUT ▷
30	6CH INPUT
40	–
50	–
60	–
70	–
80	–
90	–
100	KEY OFF state

DC:007 PS:025

The above figures are examples for reference.

DC/PS (Detection of the protection function) [Remote control code: 7A—0B (CD SKIP –)]

DC: Protection value for DC detection (Normal value: 1~13) 0.05V~ 0.65V (reference voltage)
When the value is out of the normal value range, the protection function works to turn off the power.

PS: Protection value for power voltage (Normal value: 23~37) 1.15V~ 1.85V (reference voltage)
When the value is out of the normal value range, the protection function works to turn off the power.

12. IF STATUS (Input function status)

Using this menu, the status data is displayed in the hexadecimal notation one after another.
During signal processing, the status before execution of this menu is maintained.
To convert the analog input to the digital input, use the following procedure.
1) Select either DIAG menu No.3 or No.4 and enter a digital signal.
2) Select menu No.12 by pressing the INPUT MODE key of the main unit. (The input mode will be fixed to the digital mode.)

There are 17 sub-menu items.
The following status information is displayed in the hexadecimal notation according to the sub-menu operation.

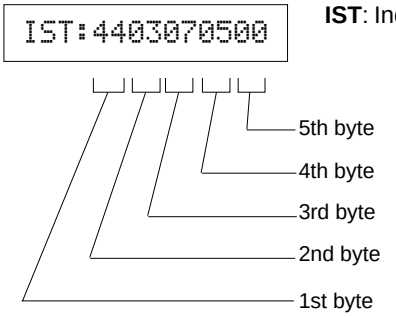

IST: Indicates the information of the microprocessor.

1st byte
Indicates the digital selector position information.
(Upper 4 bits REC OUT selected / lower 4 bits INPUT selected)

Indicate	Selector Position
0	NONE
1	FRONT (VIDEO AUX)
2	OPT1 (MD/CD-R)
3	OPT2 (DVD)
4	OPT3 (D-TV/CBL)
5	OPT4 (–)
6	OPT5 (–)
7	OPT6 (–)
8	COAX1 (CD)
9	COAX2 (–)
A	COAX4 (–)
B	COAX5 (–)
C	COAX3 (–)
D	RF
E	NONE
F	NONE

3rd byte
Indicates the audio code mode information of the reproduction signals.

Indicate	Audio Code
00	1 + 1
01	1/0
02	2/0
03	3/0
04	2/1
05	3/1
06	2/2
07	3/2
08	2/3
09	3/3
0A	dts7.1
0B	Undefined

2nd byte
Indicates the Fs information of the reproduction signals.

Indicate	Fs (kHz)
00	Analog
01	32
02	44.1
03	48
04	64
05	88.2
06	96
07	Unknown NRM (*1)
08	Unknown DBL (*2)
09	Undefined

(*1): Unknown (format) sample frequency lower than 48kHz.
(*2): Unknown sample frequency exceeding 48kHz.

4th byte
Indicates the format information of the reproduction signals.

Indicate	Format
00	Analog (Unlock)
01	Wrong digital (*1)
02	Digital Data
03	IEC1937 Data
04	PCM Audio
05	Dolby Digital
06	D.D. Karaoke
07	D.D. EX
08	RED dts
09	ORANGE dts
0A	dts ES
0B	NONE PCM

(*1): Digital reproduction cannot be used due to a commercial bit or 4ch audio reason. Analog reproduction is used instead.

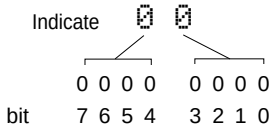

Indicate	bit			
	7	6	5	4
0	0	0	0	0
1	0	0	0	1
2	0	0	1	0
3	0	0	1	1
4	0	1	0	0
5	0	1	0	1
6	0	1	1	0
7	0	1	1	1
8	1	0	0	0
9	1	0	0	1
A	1	0	1	0
B	1	0	1	1
C	1	1	0	0
D	1	1	0	1
E	1	1	1	0
F	1	1	1	1

Indicate	bit			
	3	2	1	0
0	0	0	0	0
1	0	0	0	1
2	0	0	1	0
3	0	0	1	1
4	0	1	0	0
5	0	1	0	1
6	0	1	1	0
7	0	1	1	1
8	1	0	0	0
9	1	0	0	1
A	1	0	1	0
B	1	0	1	1
C	1	1	0	0
D	1	1	0	1
E	1	1	1	0
F	1	1	1	1

5th byte

Indicates the information on the signal processing status.

bit7	MUTE requested
bit6	dts flashing (Red)
bit5	EX sound field being processed
bit4	Full mute (On: 1)
bit3	–
bit2	THROUGH & BYPASS (*2)
bit1	–
bit0	dts analog mute

(*2): In the case of digital signals other than 32kHz, 44.1kHz and 48kHz, through processing is used for reproducible signals.

CS 1 – 5: IEC60958 channel status information of input signals

CS1:0299000200 - - - - - CS5:00000000

BI 1 – 4: Bit stream information included in the DOLBY DIGITAL signal indicated one by one.

BI1:1C40E1301B - - - - - BI4:F500F800

BS 1 – 4: Bit stream information included in the dts signal indicated one by one.

BS1:FFFFFFFFFF - - - - - BS4:FFFFFFFF

YS 1 – 3: Device status information of YSS928 (IC801)

* The numeric values in each example are for reference.

YS1:FE0218070F

Byte No.	Function
1	YSS MUTE Reg
2	YSS MODE Reg
3	YSS IPORT BIT 7 – 0
4	YSS IPORT BIT 14 – 8
5	YSS OPORT

YS2:0101418000

Byet No.	Function
1	IEC1937 Preamble Pc
2	AC-3 Data Stream No
3	AC-3D Decode Status
4	YSS ZERO Reg
5	MIREG

YS3:1A41803D

Byte No.	Function
1	DIR Status
2	DIR fs
3	DIR fs count
4	YSS ZEROBF

13. DSP RAM CHECK [Remote control code: 7A—0A (CD SKIP +)]

This menu is used to self-diagnose whether or not YSS928 (IC801 of DSP circuit board) and external RAM (IC802 of DSP circuit board) are connected properly.
During signal processing, the status before execution of this menu is maintained.

BUS CHECK:NOER

Checks the address bus and the data bus, and indicates the connection condition.
"NOER" appears when no error is detected.

Indicate	Function
WAIT	Bus being checked
NOER	No error detected
DATA	Short or open of data bus
ADDR	Short or open of address bus

14. VERSION/SUM

There are two sub-menu items.
Indicates the program version, checksum of the microprocessor (IC501 of the operation circuit board).
The checksum is obtained by adding data for every 8 bits for each program area and expressing the result as a 4-figure hexadecimal data.

The signals are processed using EFFECT OFF. (The L/R signals are output using ANALOG MAIN BYPASS setting.)

VER. XXXXX

Version [Remote control code: 7A—0D (CD REW)]
Release 1 figure / Main 2 figures / DSP 2 figures

A:XXXX P:XXXX

Checksum [Remote control code: – – – –]
A: All
P: Program area

■ AMP CHECK

● Confirmation of Idling Current

1) No signal applied.
2) Non-loaded condition.
3) Aging is not neccessary.

Item	Test Point	Rating (DC)	Note
MAIN L	R145	0.1mV—10mV	If the measured voltage exceeds 10.1mV, cut the lead wire of R105(L ch), R112(R ch), R133(C ch), R119(RL ch) or R126(RR ch) and then check again if each measured value satisfies the rating.
MAIN R	R150		
CENTER	R165		
REAR L	R155		
REAR R	R160		

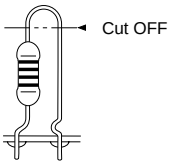

R105 (L ch)/R112 (R ch)/
R133 (C ch)/R119 (RL ch)/
R126 (RR ch)

* Confirm that the idling current is 0.2mV — 15mV after 60 minutes.

Note)

- If R105(L ch), R112(R ch), R133(C ch), R119(RL ch) or R126(RR ch) have already been cut off and idling current does not flow, reconnect R105(1kΩ), R112(1kΩ), R133(1kΩ), R119(1kΩ) or R126(1kΩ).
- Q101, Q102, Q103, Q104 and Q105 are transistors for temperature correction. Apply silicone grease to the contact surface with the heat sink.

● Test Point

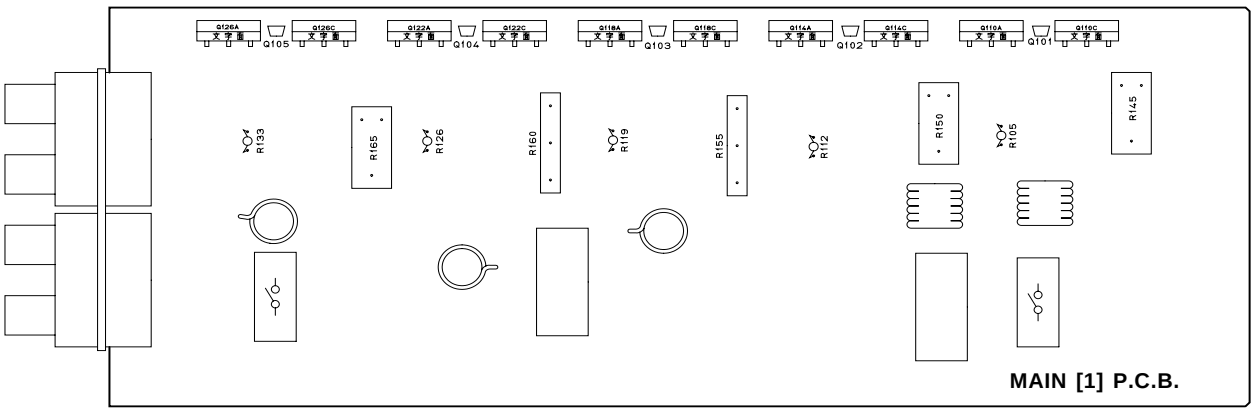

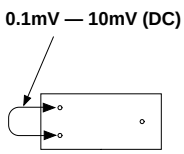

R145 (L ch)
R150 (R ch)
R165 (C ch)

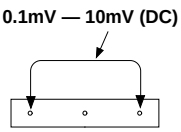

R155 (RL ch)
R160 (RR ch)

■ IC DATA

IC501 : μPD784217AGF (OPERATION P.C.B.)

16 bit μ-COM (CPU)

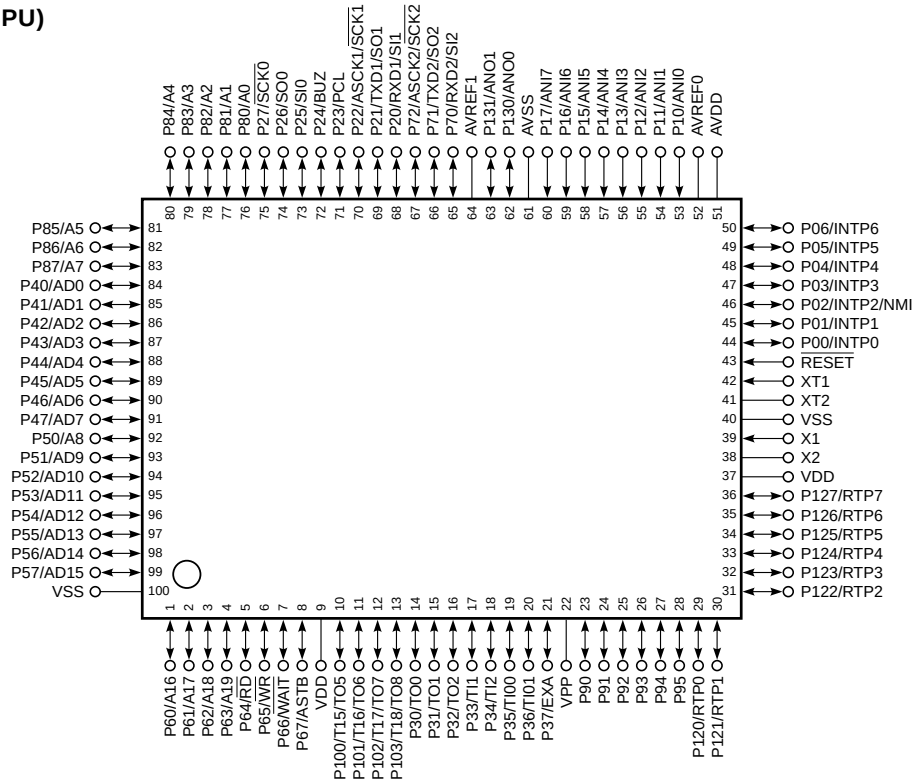

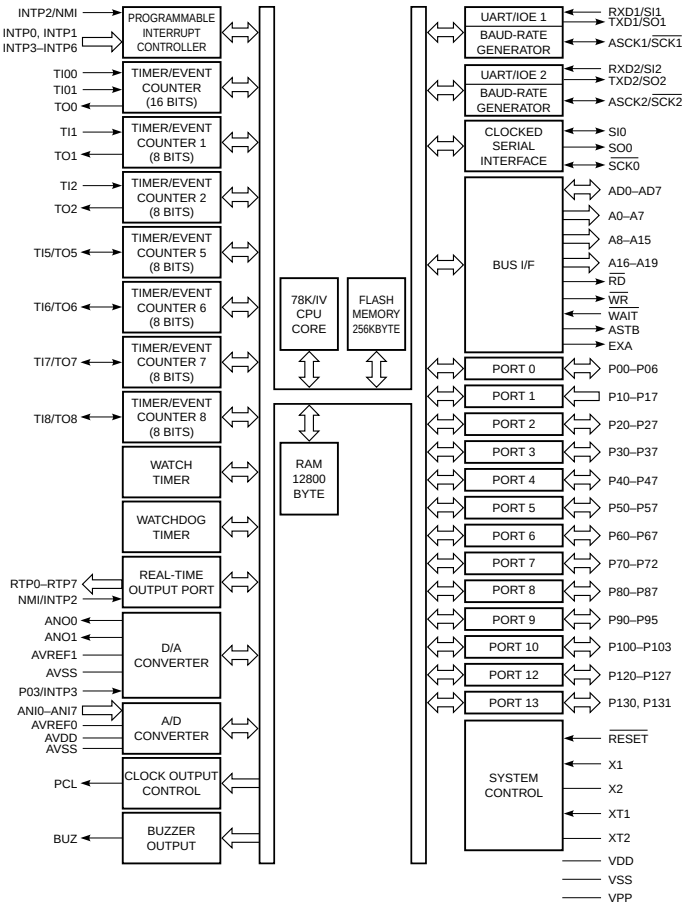

IC501 : μPD784217AGF (OPERATION P.C.B.)
16 bit μ-COM (CPU)

No.	PORT	Name	I/O	Function	o.	PORT	Name	I/O	Function
1	P60/A16	CKP	O	TC74HC164 CLOCK	100	Vss	MG		Ground
2	P61/A17		O	NC	99	P57/A15	CEL	O	LC78211/LC78213 CE
3	P62/A18		O	NC	98	P56/A14	CET	O	NC
4	P63/A19		O	NC	97	P55/A13	SCK	O	AUDIO IC CLOCK
5	P64//RD		O	NC	96	P54/A12	SO	O	AUDIO IC DATA
6	P65//WR		O	NC	95	P53/A11	CEV	O	CS3310 Enable
7	P66//WAIT		O	NC	94	P52/A10	VMT	O	CS3310 Reset
8	P67//ASTB	SCN	O	AK4382 CSN	93	P51/A9		O	NC
9	VDD	+5BU		Power Supply	92	P50/A8		O	NC
10	P100/TI5/TO5	VRB	I	Volume Rotary B	91	P47/AD7		O	NC
11	P101/TI6/TO6	VRA	I	Volume Rotary A	90	P46/AD6	/MTSW	O	MUTE LFE
12	P102/TI7/TO7	/DMT	O	DIG FULL MUTE	89	P45/AD5	/MTC	O	MUTE CENTER
13	P103/TI8/TO8	PRY	O	Power Relay	88	P44/AD4	/MMR	O	MUTE MAIN, REAR
14	P30/TO0	MRY	O	Speaker Relay Main	87	P43/AD3	/TMT	O	TUN MUTE(L:ON)
15	P31/TO1	ERY	O	Speaker Relay Efect	86	P42/AD2	DEST	I	FREQ SW(R VER)
16	P32/TO2	RIMA	O	Power Limiter A	85	P41/AD1	RDSE	I/O	RDS Enable / RDS (Not/Exit)
17	P33/TI1	RIMB	O	Power Limiter B	84	P40/AD0	TUN1	I	TUN STEP1
18	P34/TI2		O	NC	83	P87/A7	TUN0	I	TUN STEP0
19	P35/TI00	HPRY	O	HEADPHONE RELAY	82	P86/A6	/ST	I	TUNER /ST
20	P36/TI01		O	NC	81	P85/A5	TUNED	I	TUNED
21	P37/EXA	/HP	I	HP Detect	80	P84/A4	SCKR	O	RDS /OSD/BU2092 CLOCK
22	TEST/Vpp	Vpp			79	P83/A3	SDTR	O	RDS /OSD/BU2092 TxD
23	P90		O	NC	78	P82/A2	SDRR	I	RDS RxD (Reception)
24	P91		O	NC	77	P81/A1	/ICD	O	YSS928 /DAC/CODEC
25	P92		O	NC	76	P80/A0	/CSY	O	YSS928 CE
26	P93		O	NC	75	P27//SCK0/SCL0	/SCKO	O	FL Driver Clock/FLA Clock
27	P94		O	NC	74	P26/SO0	SDF	O	FL Driver TxD /FLA RxD
28	P95		O	NC	73	P25/SI0/SDA0	CEFD	O	FL Driver CE /FLA TxD
29	P120/RTP0		O	NC	72	P24/BUZ	Vpp2		
30	P121/RTP1		O	NC	71	P23/PCL	CEP	O	PLL IC Enable
31	P122/RTP2		O	NC	70	P22/ASCK1//SCK1	SCKP	O	PLL IC CLOCK
32	P123/RTP3		O	NC	69	P21/TxD1/SO1	SDTP	O	PLL IC TxD
33	P124/RTP4	ROA	I	Rotary OPE A	68	P20/RxD1/SI1	SDRP	I	PLL Reception
34	P125/RTP5	ROB	I	Rotary OPE B	67	P72/ASCK2//SCK2	YSSCK	O	YSS928 CLOCK
35	P126/RTP6		O	NC	66	P71/TxD2/SO2	SDM	O	YSS928 TxD
36	P127/RTP7		O	NC	65	P70/RxD2/SI2	SDD	I	YSS928 RxD
37	VDD	+5BU		Power Supply	64	Avref	Avref		Analog Reference Voltage
38	X2	X2		Main System Clock (10MHz)	63	P131/ANO1	/BLK	O	FL Driver Off
39	X1	X1		Main System Clock (10MHz)	62	P130/ANO0		O	NC
40	Vss	MG		Ground	61	Avss			
41	XT2	XT2		NC	60	P17/ANI7	PRW	AD	V Protection
42	XT1	XT1		Subsystem Clock	59	P16/ANI6	PRD	AD	Power Amp DC Detect
43	/RESET	/RES		Reset	58	P15/ANI5	PRI	AD	I Protection
44	P00/INTP0	INT928	INT	YSS928 IPINT	57	P14/ANI4	ADKEY0	AD	KEY AD input 0
45	P01/INTP1	PDET	INT	POWER DOWN DETECT INT	56	P13/ANI3	ADKEY1	AD	KEY AD input 1
46	P02/INTP2/NMI	PSW	INT	Standby SW input(H edge)	55	P12/ANI2	ADKEY2	AD	KEY AD input 2
47	P03/INTP3	REM1	INT	Remote in	54	P11/ANI1	MODEL	AD	Model Detect (RX/AX)
48	P04/INTP4	VSY	INT	Video Vertical Sync	53	P10/ANI0	PREMT	AD	POWER LIMITTER DETECT
49	P05/INTP5	CES	I/O	CE for On Screen/Video format	52	AVref0	AVref0		Analog Reference Voltage
50	P06/INTP6	E/I	O	Internal/External Synchronous output	51	AVdd	AVdd		Analog Power Supply

IC801 : YSS928 (DSP P.C.B.)

AC3D3

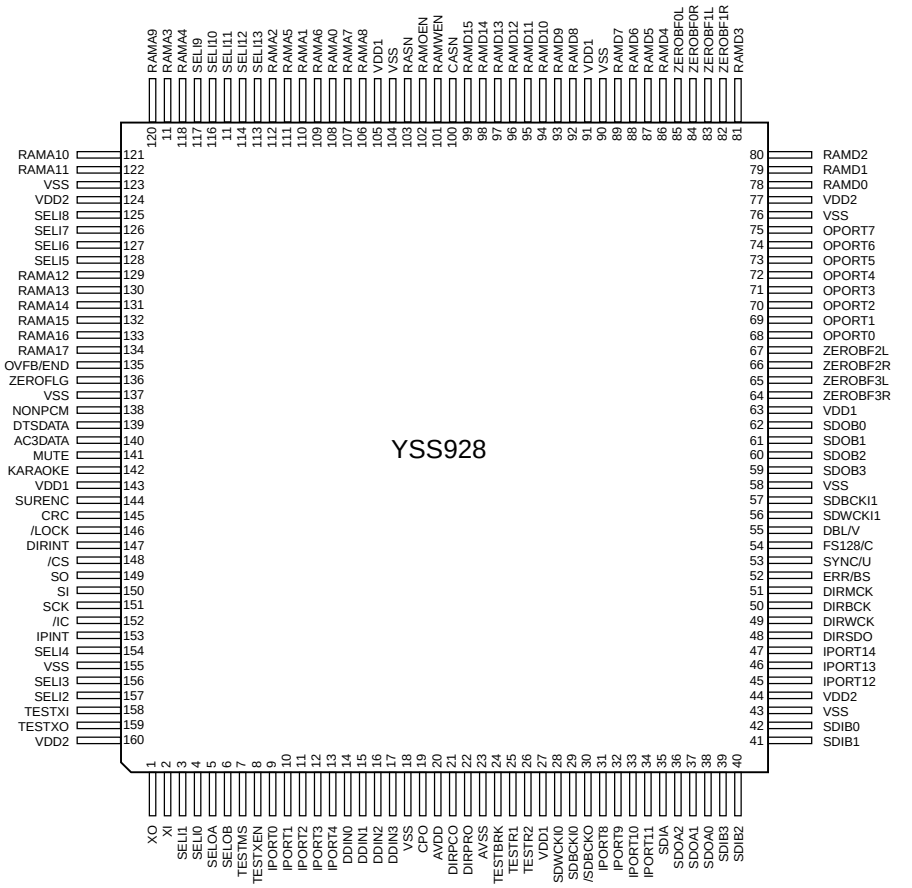

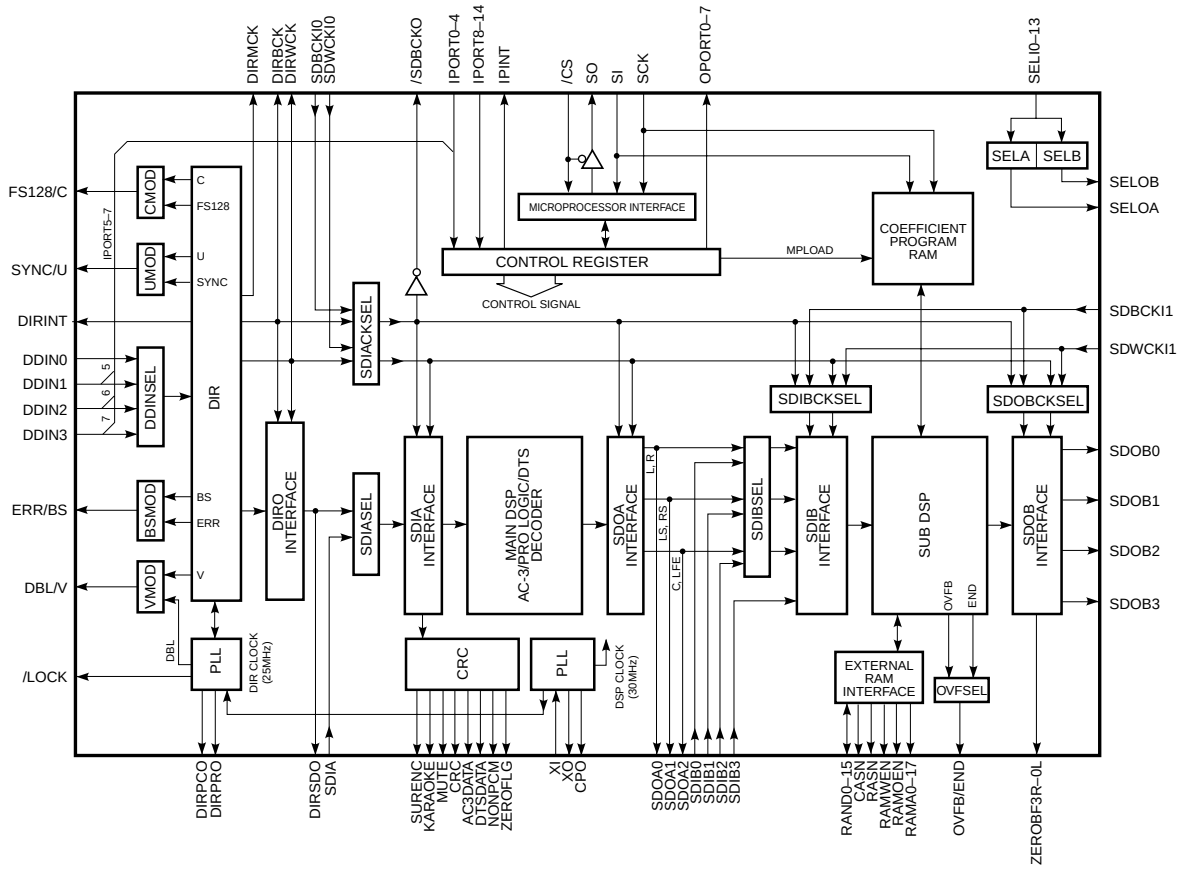

IC801 : YSS928 (DSP P.C.B.)

AC3D3

No.	Name	I/O	Function	
1	XO	O	Crystal oscillator connecting terminal	
2	XI	I	Crystal oscillator connecting terminal (24.576MHz)	
3	SELI1	I+	Built-in selector input 1	(AXD)
4	SELI0	I+	Built-in selector input 0	(GND)
5	SELOA	O+	Built-in selector output A	(ISEL)
6	SELOB	O+	Built-in selector output B	(RSEL)
7	TESTMS	I+	Test terminal (unconnected)	
8	TESTXEN	I+	Test terminal (unconnected)	
9	IPORT0	I+	General purpose input terminal	(CXDTA)
10	IPORT1	I+	General purpose input terminal (unconnected)	
11	IPORT2	I+	General purpose input terminal (unconnected)	
12	IPORT3	I+	General purpose input terminal (unconnected)	
13	IPORT4	I+	General purpose input terminal (unconnected)	
14	DDIN0	Is	DIR: Digital audio interface data input terminal 0	(ISEL)
15	DDIN1	Is	DIR: Digital audio interface data input terminal 1/General purpose input terminal	(Pull down)
16	DDIN2	Is	DIR: Digital audio interface data input terminal 2/General purpose input terminal	(GND)
17	DDIN3	Is	DIR: Digital audio interface data input terminal 3/General purpose input terminal	(Pull up)
18	VSS		Ground terminal	
19	CPO	A	PLL filter connecting terminal	
20	AVDD		+3.3V power terminal (for DIR)	
21	DIRPCO	A	DIR: PLL filter connecting terminal	
22	DIRPRO	A	DIR: PLL filter connecting terminal	
23	AVSS		Ground terminal (for DIR)	
24	TESTBRK	I+	Test terminal (unconnected)	
25	TESTR1	I+	PLL initialization signal input terminal for DSP	(/ICD)
26	TESTR2	I+	Test terminal (unconnected)	
27	VDD1		+3.3V power terminal (for terminal section)	
28	SDWCKI0	I+	Word clock input terminal for SDIA, SDOA, SDIB, SDOB interface (Unconnected)	
29	SDBCKI0	I+	Bit clock input terminal for SDIA, SDOA, SDIB, SDOB interface (Unconnected)	
30	/SDBCK0	O	DIRBCK or SDBCKI0 invert clock output terminal (Unconnected)	
31	IPORT8	I+	IPINT general purpose input terminal (Unconnected)	
32	IPORT9	I+	IPINT general purpose input terminal	(NONPCM)
33	IPORT10	I+	IPINT general purpose input terminal	(NONPCM)
34	IPORT11	I+	IPINT general purpose input terminal	(MUTE)
35	SDIA	I	AC-3/DTS bit stream (or PCM) data input terminal to Main DSP	(SDAD)
36	SDOA2	O	PCM output terminal from Main DSP (C/LFE output) (Unconnected)	
37	SDOA1	O	PCM output terminal from Main DSP (LS/RS output) (Unconnected)	
38	SDOA0	O	PCM output terminal from Main DSP (L/R output) (Unconnected)	
39	SDIB3	I+	PCM input terminal 3 to Sub DSP (Unconnected)	
40	SDIB2	I+	PCM input terminal 2 to Sub DSP (Unconnected)	
41	SDIB1	I+	PCM input terminal 1 to Sub DSP (Unconnected)	
42	SDIB0	I+	PCM input terminal 0 to Sub DSP (Unconnected)	
43	VSS		Ground terminal	
44	VDD2		+2.5V power terminal (for internal circuit)	
45	IPORT12	I+	IPINT general purpose input terminal	(DBL)
46	IPORT13	I+	IPINT general purpose input terminal	(DBL)
47	IPORT14	I+	IPINT general purpose input terminal	(DIRINT)
48	DIRSDO	O	AC-3/DTS bit stream (or PCM) data output terminal from DIR (Unconnected)	
49	DIRWCK	O	DIR: Serial data word clock (fs) output terminal	(WCK)
50	DIRBCK	O	DIR: Serial data bit clock (64fs) output terminal	(BCK)
51	DIRMCK	O	DIR: Serial data master clock (256fs or 128fs) output terminal	(MCK)
52	ERR/BS	O	DIR: Data error detect output/block start output terminal (Unconnected)	
53	SYNC/U	O	DIR: Serial data synchronous timing output/user data output terminal (Unconnected)	
54	FS128/C	O	DIR: Serial data master clock 128fs output/channel status output terminal (Unconnected)	
55	DBL/V	O	DIR: Double rate clock output/validity flag output terminal	(DBL)

IC801 : YSS928 (DSP P.C.B.)

AC3D3

No.	Name	I/O	Function	
56	SDWCKI1	I+	Word clock input terminal for SDIB, SDOB interface (Unconnected)	
57	SDBCKI1	I+	Bit clock input terminal for SDIB, SDOB interface (Unconnected)	
58	VSS		Ground terminal	
59	SDOB3	O	PCM output terminal from Sub DSP	
60	SDOB2	O	PCM output terminal from Sub DSP	
61	SDOB1	O	PCM output terminal from Sub DSP	
62	SDOB0	O	PCM output terminal from Sub DSP	
63	VDD1		+3.3V power terminal (for terminal section)	
64	ZEROBF3R	O+	SDOB3 Rch zero flag output terminal	(ZF3R)
65	ZEROBF3L	O+	SDOB3 Lch zero flag output terminal	(ZF3L)
66	ZEROBF2R	O+	SDOB2 Rch zero flag output terminal	(ZF2R)
67	ZEROBF2L	O+	SDOB2 Lch zero flag output terminal	(ZF2L)
68	OPORT0	O	General purpose output terminal (Unconnected)	
69	OPORT1	O	General purpose output terminal	(/RINH1)
70	OPORT2	O	General purpose output terminal (Unconnected)	
71	OPORT3	O	General purpose output terminal	(/ICCDC)
72	OPORT4	O	General purpose output terminal	(DFS)
73	OPORT5	O	General purpose output terminal	(DPL)
74	OPORT6	O	General purpose output terminal (Unconnected)	
75	OPORT7	O	General purpose output terminal (Unconnected)	
76	VSS		Ground terminal	
77	VDD2		+2.5V power terminal (for internal circuit)	
78	RAMD0	I+/O	Sub DSP: External memory data terminal 0	
79	RAMD1	I+/O	Sub DSP: External memory data terminal 1	
80	RAMD2	I+/O	Sub DSP: External memory data terminal 2	
81	RAMD3	I+/O	Sub DSP: External memory data terminal 3	
82	ZEROBF1R	O+	SDOB1 Rch zero flag output terminal	(ZF1R)
83	ZEROBF1L	O+	SDOB1 Lch zero flag output terminal	(ZF1L)
84	ZEROBF0R	O+	SDOB0 Rch zero flag output terminal	(ZF0R)
85	ZEROBF0L	O+	SDOB0 Lch zero flag output terminal	(ZF0L)
86	RAMD4	I+/O	Sub DSP: External memory data terminal 4	
87	RAMD5	I+/O	Sub DSP: External memory data terminal 5	
88	RAMD6	I+/O	Sub DSP: External memory data terminal 6	
89	RAMD7	I+/O	Sub DSP: External memory data terminal 7	
90	VSS		Ground terminal	
91	VDD1		+3.3V power terminal (for terminal section)	
92	RAMD8	I+/O	Sub DSP: External memory data terminal 8	
93	RAMD9	I+/O	Sub DSP: External memory data terminal 9	
94	RAMD10	I+/O	Sub DSP: External memory data terminal 10	
95	RAMD11	I+/O	Sub DSP: External memory data terminal 11	
96	RAMD12	I+/O	Sub DSP: External memory data terminal 12	
97	RAMD13	I+/O	Sub DSP: External memory data terminal 13	
98	RAMD14	I+/O	Sub DSP: External memory data terminal 14	
99	RAMD15	I+/O	Sub DSP: External memory data terminal 15	
100	CASN	O	Sub DSP: Column address strobe output terminal for external DRAM	
101	RAMWEN	O	Sub DSP: Write enable terminal for external memory	
102	RAMOEN	O	Sub DSP: Output enable terminal for external memory	
103	RASN	O	Sub DSP: Low address strobe output terminal for external DRAM	
104	VSS		Ground terminal	
105	VDD1		+3.3V power terminal (for terminal section)	
106	RAMA8	O	Sub DSP: External memory address terminal 8	
107	RAMA7	O	Sub DSP: External memory address terminal 7	
108	RAMA0	O	Sub DSP: External memory address terminal 0	
109	RAMA6	O	Sub DSP: External memory address terminal 6	
110	RAMA1	O	Sub DSP: External memory address terminal 1	

IC801 : YSS928 (DSP P.C.B.)

AC3D3

No.	Name	I/O	Function	
111	RAMA5	O	Sub DSP: External memory address terminal 5	
112	RAMA2	O	Sub DSP: External memory address terminal 2	
113	SELI13	I+	Built-in selector input 13 (Unconnected)	
114	SELI12	I+	Built-in selector input 12 (Unconnected)	
115	SELI11	I+	Built-in selector input 11 (Unconnected)	
116	SELI10	I+	Built-in selector input 10 (Unconnected)	
117	SELI9	I+	Built-in selector input 9 (Unconnected)	
118	RAMA4	O	Sub DSP: External memory address terminal 4	
119	RAMA3	O	Sub DSP: External memory address terminal 3	
120	RAMA9	O	Sub DSP: External memory address terminal 9 (Unconnected)	
121	RAMA10	O	Sub DSP: External memory address terminal 10 (Unconnected)	
122	RAMA11	O	Sub DSP: External memory address terminal 11 (Unconnected)	
123	VSS		Ground terminal	
124	VDD2		+2.5V power terminal (for internal circuit)	
125	SELI8	I+	Built-in selector input 8	(CXA)
126	SELI7	I+	Built-in selector input 7	(GND)
127	SELI6	I+	Built-in selector input 6 (Unconnected)	
128	SELI5	I+	Built-in selector input 5 (Unconnected)	
129	RAMA12	O	Sub DSP: External memory address terminal 12 (Unconnected)	
130	RAMA13	O	Sub DSP: External memory address terminal 13 (Unconnected)	
131	RAMA14	O	Sub DSP: External memory address terminal 14 (Unconnected)	
132	RAMA15	O	Sub DSP: External memory address terminal 15 (Unconnected)	
133	RAMA16	O	Sub DSP: External memory address terminal 16 (Unconnected)	
134	RAMA17	O	Sub DSP: External memory address terminal 17 (Unconnected)	
135	OVFB/END	O	Sub DSP: Overflow/program end detect terminal (Unconnected)	
136	ZEROFLG	O	Main DSP: Zero flag output terminal (Unconnected)	
137	VSS		Ground terminal	
138	NONPCM	O	Main DSP: Non-PCM data detect terminal	
139	DTSDATA	O	Main DSP: DTS data detect terminal (Unconnected)	
140	AC3DATA	O	Main DSP: AC3 data detect terminal (Unconnected)	
141	MUTE	O	Main DSP: Auto mute detect terminal	
142	KARAOKE	O	Main DSP: AC3 KARAOKE data detect terminal (Unconnected)	
143	VDD1		+3.3V power terminal (for terminal section)	
144	SURENC	O	Main DSP: AC-3 2/0 mode Dolby surround encode input detect terminal (Unconnected)	
145	CRC	O	Main DSP: AC3 CRC error detect terminal (Unconnected)	
146	/LOCK	O	DIR: PLL lock detect terminal (Unconnected)	
147	DIRINT	O	DIR: Interrupt output terminal	
148	/CS	Is	Microprocessor interface chip select input terminal	(CSY)
149	SO	Ot	Microprocessor interface data output terminal	
150	SI	Is	Microprocessor interface data input terminal	(SDM)
151	SCK	Is	Microprocessor interface clock input terminal	(YSSCK)
152	/IC	Is	Initial clear input terminal	(/ICD)
153	IPINT	O+	Interrupt output terminal by IPORT 8-14	
154	SELI4	I+	Built-in selector input 4	(OPTD)
155	VSS		Ground terminal	
156	SELI3	I+	Built-in selector input 3	(OPTC)
157	SELI2	I+	Built-in selector input 2	(OPTB)
158	TESTXI	I	Test terminal (should be always connected to VSS)	
159	TESTXO	O	Test terminal (Unconnected)	
160	VDD2		+2.5V power terminal (for internal circuit)	

Is: Schmidt trigger input terminal
I+: Input terminal with pull-up resistor
O: digital output terminal
Ot: Tri-state digital output terminal
A: Analog terminal

IC587 : LC74781-9798 (OPERATION P.C.B.)
Superimpose

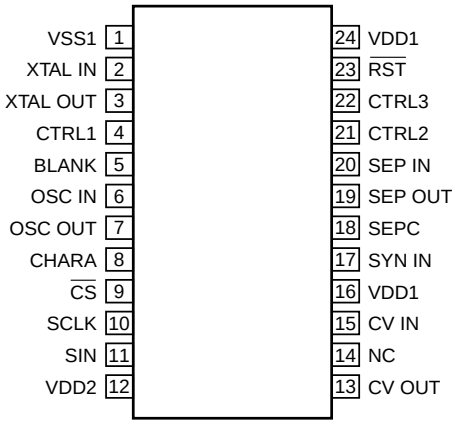

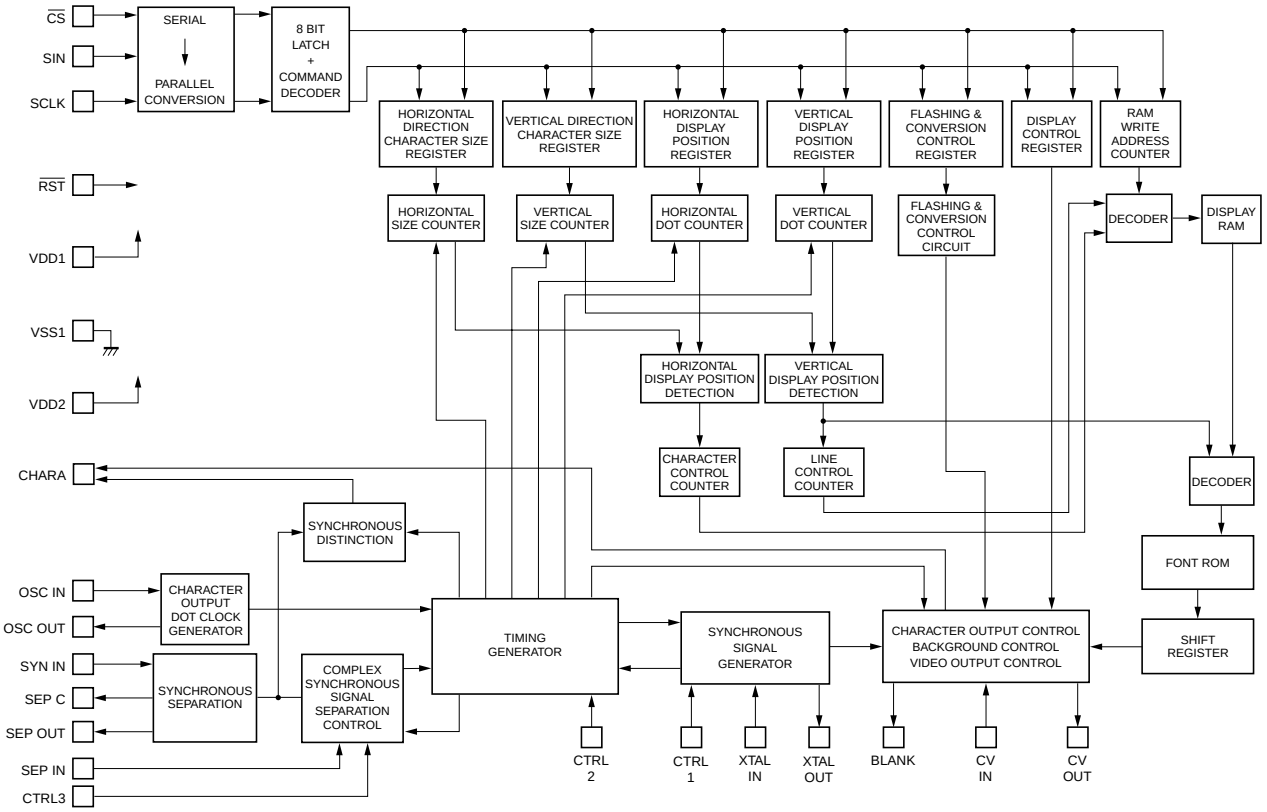

IC587 : LC74781-9798 (OPERATION P.C.B.)

Superimpose

Pin No.	Symbol	Terminal name	Function
1	VSS1	Ground terminal	Connection to GND (Digital system ground terminal)
2	XTAL IN	Crystal oscillation terminal	Terminal to connect the crystal of the crystal oscillator for internal synchronous signal generation and a capacitor or to input an external clock. (2fsc or 4fsc)
3	XTAL OUT		
4	CTRL1	Crystal oscillation input switching terminal	Switching terminal between the mode to input a clock externally and the mode for crystal oscillation. [L] = Crystal oscillation, [H] = External clock input
5	BLANK	Blank output terminal	Terminal to output the blank signal (character and bordering OR signal) (MOD0 : complex synchronous signal output at [H]). When resetting (RST terminal = [L]), a crystal oscillation clock is output (but not when resetting by the command).
6	OSC IN	LC oscillation terminal	Terminal to connect the coil of the oscillator for character output dot clock generation and a capacitor.
7	OSC OUT		
8	CHARA	Character output terminal	Terminal to output a character signal (MOD0 : It becomes an output terminal to judge the external synchronous signal at [H] and outputs the result after judging existence of the external synchronous signal. When a synchronous signal exists, [H] is output.) When resetting (RST terminal = [L]), a dot clock (LC oscillation) is output (but it is not output when reset by the command.)
9	/CS	Enable input terminal	Serial data input enable input terminal. The serial data input becomes enable at [L]. A pull-up resistor is built in (hysteresis input).
10	SCLK	Clock input terminal	Input terminal of clock for serial data input. A pull-up resistor is built in (hysteresis input).
11	SIN	Data input terminal	Serial data input terminal. A pull-up resistor is built in (hysteresis input).
12	VDD2	Power supply terminal	Power supply terminal for complex image signal level adjustment (Power supply for analog system)
13	CV OUT	Video signal output terminal	Output terminal for complex image signal.
14	NC		Connected to GND or unconnected.
15	CV IN	Video signal input terminal	Input terminal for complex image signal.
16	VDD1	Power supply terminal	Power supply terminal (+5V : power supply for digital system)
17	SYN IN	Synchronous separation circuit input terminal	Video signal input terminal of the built-in synchronous separation circuit (When the built-in synchronous separation circuit is not used, it becomes a horizontal synchronous signal input or a complex synchronous signal input.)
18	SEP C	Synchronous separation circuit bias voltage terminal	Terminal to monitor built-in synchronous separation circuit bias voltage.
19	SEP OUT	Complex synchronous signal output terminal	Terminal to output a complex synchronous signal of built-in synchronous separation circuit ([H] when internally synchronized at MOD1 : [H], [L] output when externally synchronized) (When the built-in synchronous separation circuit is not used, SYNIN input signal is output.)
20	SEP IN	Vertical synchronous signal input terminal	Terminal to input a vertical synchronous signal by integrating the output signal of SEPOUT terminal. Connect the integration circuit between SEPOUT terminals. Fix it to VDD1 when not used.
21	CTRL2	NTSC/PAL-M switching input terminal	Pin setting has a priority over switching of NTSC/PAL/PAL-M/PAL-N method. The NTSC method is selected after [L]= reset. NTSC/PAL/PAL-M/PAL-N method setting by a command is effective. [H] = PAL-M method.
22	CTRL3	SEPIN input control terminal	Terminal to control whether or not to input VSYNC signal into SEPIN input terminal. [L] = VSYNC inputted, [H] = VSYNC not inputted.
23	/RST	Reset input terminal	System reset input terminal. A pull-up resistor is built in (hysteresis input).
24	VDD1	Power supply terminal (+5V)	Power supply terminal (+5V : power supply for digital system)

■ DISPLAY DATA

V501 : 10-BT-236GNK (V6785800)

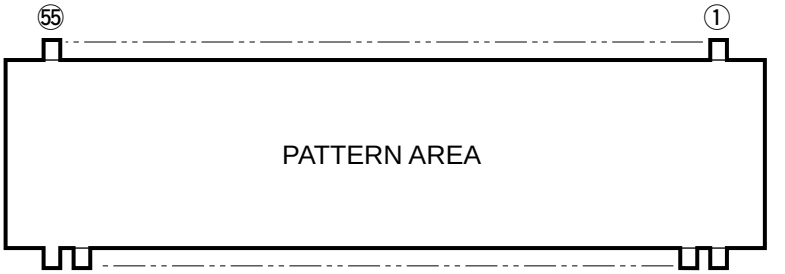

● PIN CONNECTION

Pin No.	1	2	3	4	5	6	7	8	9	10	11	12	13	14	15	16	17	18	19	20	21	22	23	24	25	26	27	28	29	30
Connection	F1	F1	NP	NP	P1	P2	P3	P4	P5	P6	P7	P8	P9	P10	P11	P12	P13	P14	P15	P16	P17	P18	P19	P20	P21	P22	P23	P24	P25	P26

Pin No.	31	32	33	34	35	36	37	38	39	40	41	42	43	44	45	46	47	48	49	50	51	52	53	54	55					
Connection	P27	P28	P29	P30	P31	P32	P33	P34	P35	NC	NC	10G	9G	8G	7G	6G	5G	4G	3G	2G	1G	NP	NP	F2	F2					

Note 1) F1, F2 ..... Filament
2) NP ..... No Pin
3) NC ..... No Connction
4) P1~P35 ..... Datum Line
5) 1G~8G ..... Grid

● GRID ASSIGNMENT

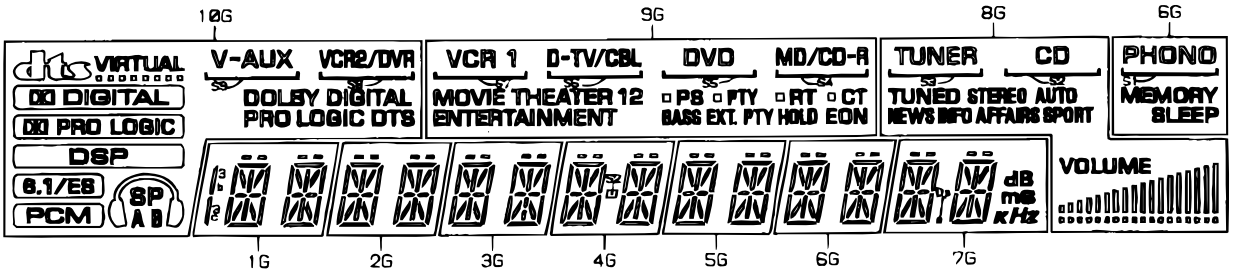

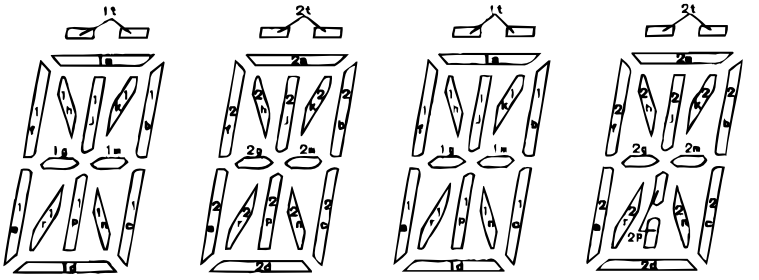

(1G,2G,4G~7G)

(3G)

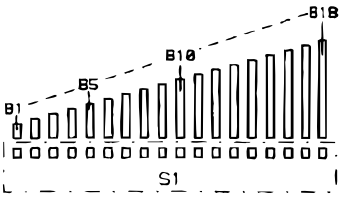

(8G)

● ANODE CONNECTION

	10G	9G	8G	7G	6G	5G	4G	3G	2G	1G
P1	dl	VCR 1	TUNER	1t	1t	1t	1t	1t	1t	1t
P2	VIRTUAL	D-TV/CBL	CD	1a	1a	1a	1a	1a	1a	1a
P3	DIGITAL	DVD	S3	1b	1b	1b	1b	1b	1b	1b
P4	PRO LOGIC	MD/CD-R	S2	1h	1h	1h	1h	1h	1h	1h
P5	DSP	S7	TUNED	1j	1j	1j	1j	1j	1j	1j
P6	6.1/ES	S6	STEREO	1k	1k	1k	1k	1k	1k	1k
P7	PCM	S5	AUTO	1f	1f	1f	1f	1f	1f	1f
P8	Ω	S4	NEWS	1q	1q	1q	1q	1q	1q	1q
P9	SP	MOVIE THEATER	INFO	1m	1m	1m	1m	1m	1m	1m
P10	A	1	AFFAIRS	1c	1c	1c	1c	1c	1c	1c
P11	B	2	SPORT	1n	1n	1n	1n	1n	1n	1n
P12	V-AUX	ENTERTAINMENT	VOLUME	1p	1p	1p	1p	1p	1p	1p
P13	VCR2/DVR	□ (PS)	B1	1r	1r	1r	1r	1r	1r	1r
P14	S9	PS	B2	1e	1e	1e	1e	1e	1e	1e
P15	S8	□ (PTY)	B3	1d	1d	1d	1d	1d	1d	1d
P16	DOLBY	PTY	B4	2t	2t	2t	2t	2t	2t	2t
P17	DIGITAL	□ (RT)	B5	2a	2a	2a	2a	2a	2a	2a
P18	PRO LOGIC	RT	B6	2b	2b	2b	2b	2b	2b	2b
P19	DTS	□ (CT)	B7	2h	2h	2h	2h	2h	2h	2h
P20	–	CT	B8	2j	2j	2j	2j	2j	2j	2j
P21	–	BASS EXT.	B9	2k	2k	2k	2k	2k	2k	2k
P22	–	PTY HOLD	B10	2f	2f	2f	2f	2f	2f	2f
P23	–	EON	B11	2q	2q	2q	2q	2q	2q	2q
P24	–	–	B12	2m	2m	2m	2m	2m	2m	2m
P25	–	–	B13	2c	2c	2c	2c	2c	2c	2c
P26	–	–	B14	2n	2n	2n	2n	2n	2n	2n
P27	–	–	B15	2p	2p	2p	2p	2p	2p	2p
P28	–	–	B16	2r	2r	2r	2r	2r	2r	2r
P29	–	–	B17	2e	2e	2e	2e	2e	2e	2e
P30	–	–	B18	2d	2d	2d	2d	2d	2d	2d
P31	–	–	S1	Dp	PHONO	–	S2	–	–	3b,3c
P32	–	–	–	K	S1	–	–	–	–	–
P33	–	–	–	Hz	MEMORY	–	–	–	–	–
P34	–	–	–	mS	SLEEP	–	–	–	–	–
P35	–	–	–	dB	–	–	–	–	–	–

■ PIN CONNECTION DIAGRAM

● ICs

NJM78L05A-T3

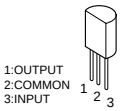

NJM79M05FA
NJM79M12FA

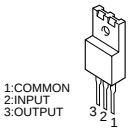

NJM7805FA
NJM7812FA

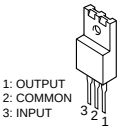

µPC29M33T-E1

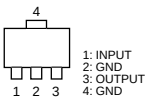

PQ025EZ5MZP

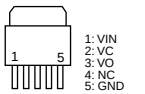

TC74HCU04AP

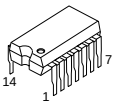

TC74HC4053AP

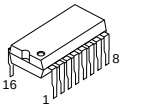

NJM2904M-T1
µPC4570G2
TK15420MTL

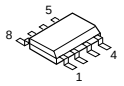

TC74HC00AF
TC74HCU04AF-TP1
TC74VHCT08AF
TC74HC164AF-EL

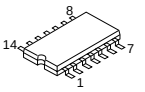

AK4382-VT-E2
LA7104M
LA7108M-TLM
CS3310-KSR
TC74HC4051AFEL

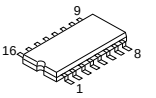

LA7109

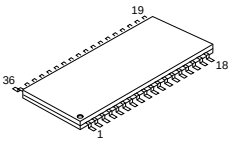

AK4527VQ

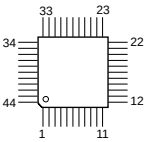

LC75725E

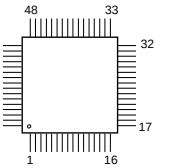

LC72722
LC74781-9798

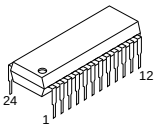

LC78211
LC78213

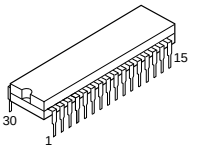

MSM514260C-60JS

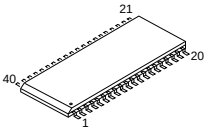

µPD784217AGF

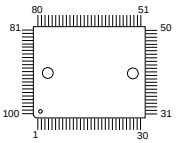

YSS928

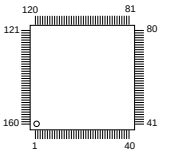

● Transistors

2SA933S (Q, R)
2SC1740S (R, S)
2SD1915F (S, T)
DTC114ES
DTC144ES

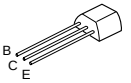

2SA893A (D, E)
2SA949 (O, Y)
2SA1015 (Y)
2SC535 (A, B, C)
2SC1815 (Y)
2SC1890A (D, E)
2SC2240 (GR, BL)
2SC2878 (A, B)

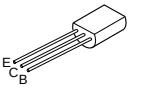

2SK246 (Y)

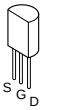

2SA1695 (O, P, Y)
2SC4468 (O, P, Y)

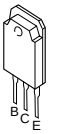

2SA1037K (Q, R, S)
2SC3326 (A, B)
DTA144EK

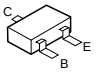

2SA1708 (S, T)
2SA1770 (S, T)
2SC4488 (S, T)
2SC4614 (S, T)
2SD1991A (Q, R, S)

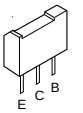

2SB1565 (E, F)
2SD2396 (J, K)

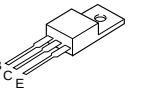

● Diodes

1SS133
1T2
1SS270A
1N4002S
MTZJ4.7C
MTZJ6.8B

MTZJ10.0C
MTZJ12.0C
MTZJ13.0A
MTZJ30.0A

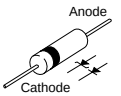

1SS355
RB501V-40
UDZS5.1B
UDZS6.2B
UDZS6.8B
UDZS7.5B
UDZS5.6B
UDZS9.1B

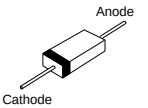

D2SBA20
S1VB20
S5VB20

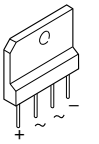

■ BLOCK DIAGRAM

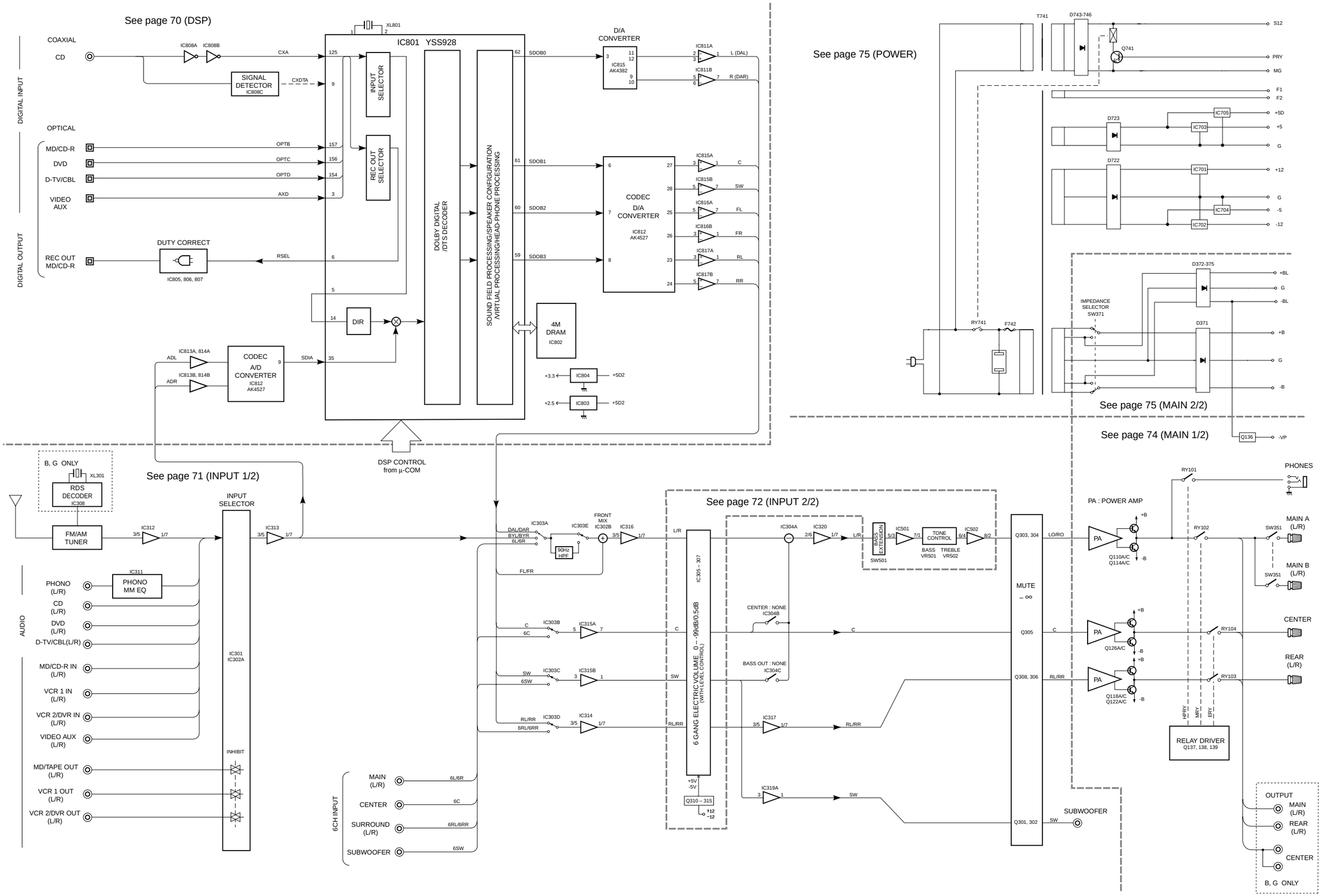

■ BLOCK DIAGRAM

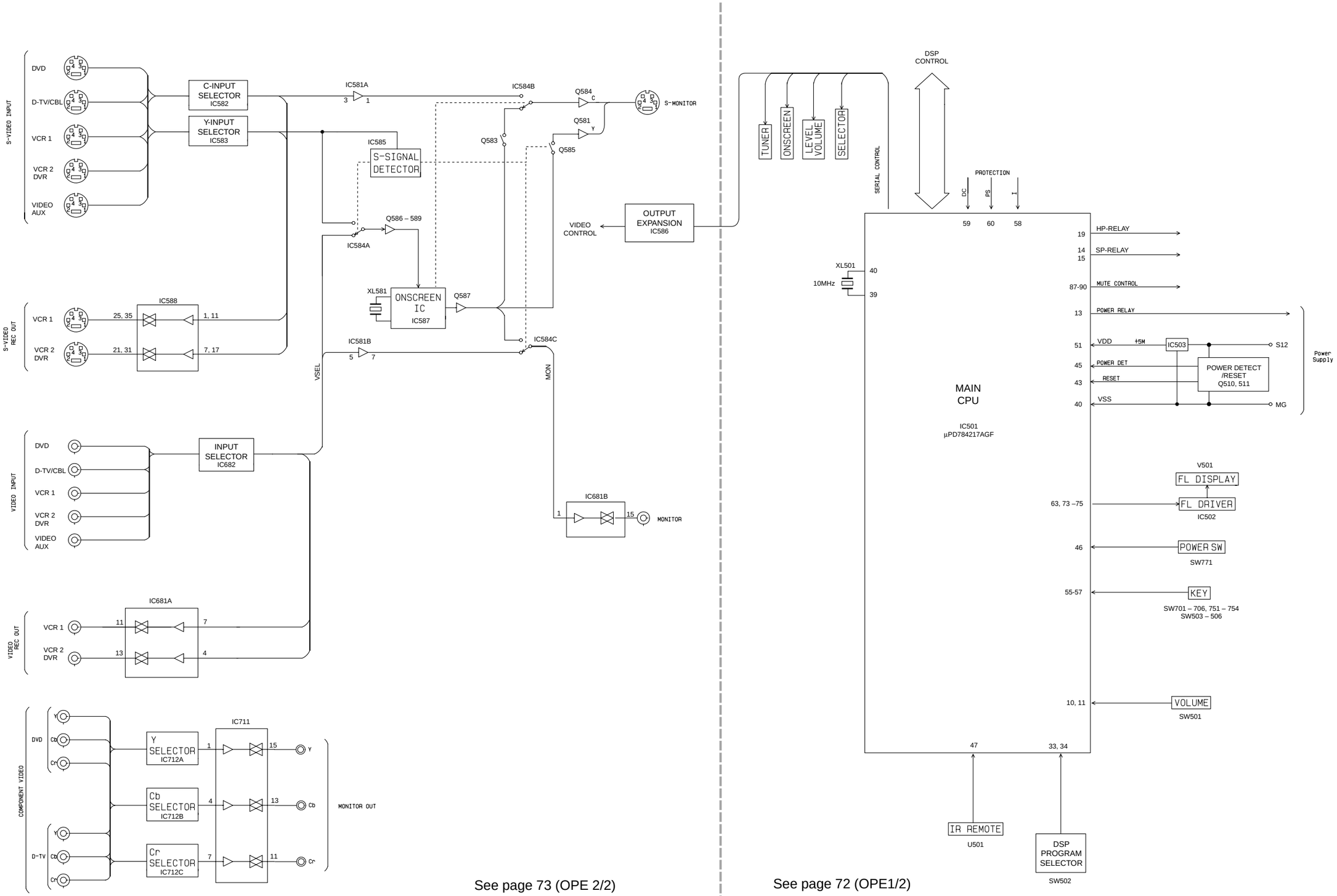

See page 73 (OPE 2/2)

See page 72 (OPE1/2)

■ PRINTED CIRCUIT BOARD (Foil side)

DSP P. C. B. (Lead Type Device)

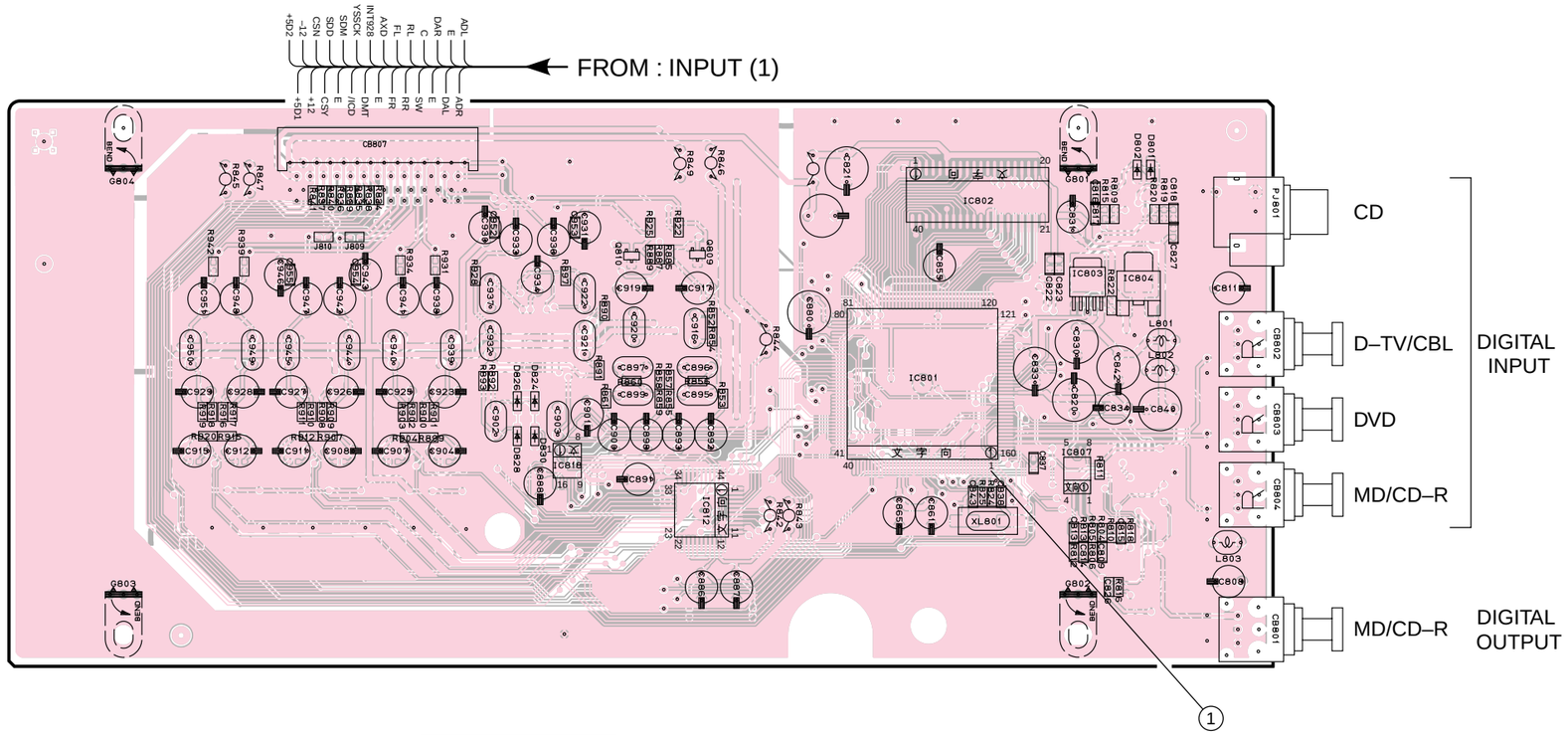

DSP P. C. B. (Surface Mount Device)

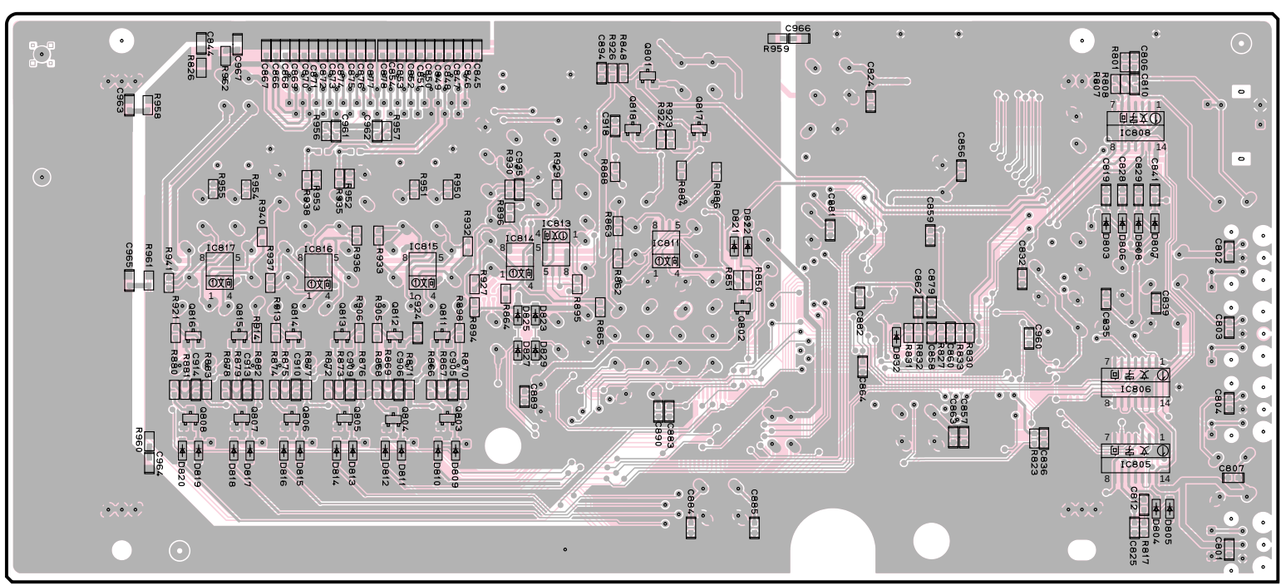

Point ① (Pin 1 of IC801)
V : 2V/div, H : 50 nsec/div
DC, 1 : 1 probe

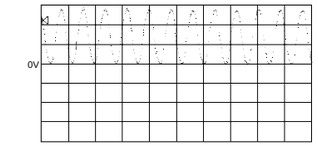

● **Semiconductor Location**

Ref. No.	Location
D801	E2
D802	E3
D803	E5
D804	E6
D805	E6
D806	E5
D807	E5
D808	E5
D809	C5
D810	C5
D811	C5
D812	C5
D813	B5
D814	B5
D815	B5
D816	B5
D817	B5
D818	B5
D819	B5
D820	B5
D821	D5
D822	D5
D823	C5
D824	C3
D825	C5
D826	C3
D827	C5
D828	C3
D829	C5
D830	C3
D832	D5

Ref. No.	Location
IC801	D2
IC802	D2
IC803	E2
IC804	E2
IC805	D5
IC806	D5
IC807	E3
IC808	E4
IC811	C5
IC812	D3
IC813	C5
IC814	C5
IC815	C5
IC816	B5
IC817	B5
IC818	C3

Ref. No.	Location
Q801	C4
Q802	D5
Q803	C5
Q804	C5
Q805	B5
Q806	B5
Q807	B5
Q808	B5
Q809	D2
Q810	C2
Q811	C5
Q812	C5
Q813	B5
Q814	B5
Q815	B5
Q816	B5
Q817	D4
Q818	C4

■ PRINTED CIRCUIT BOARD (Foil side)

● **Semiconductor Location**

Ref. No.	Location
IC301	F3
IC302	F3
IC303	E4
IC304	C3
IC308	F2

Ref. No.	Location
Q307	E2
Q309	F2

INPUT (1) P. C. B. (Lead Type Device)

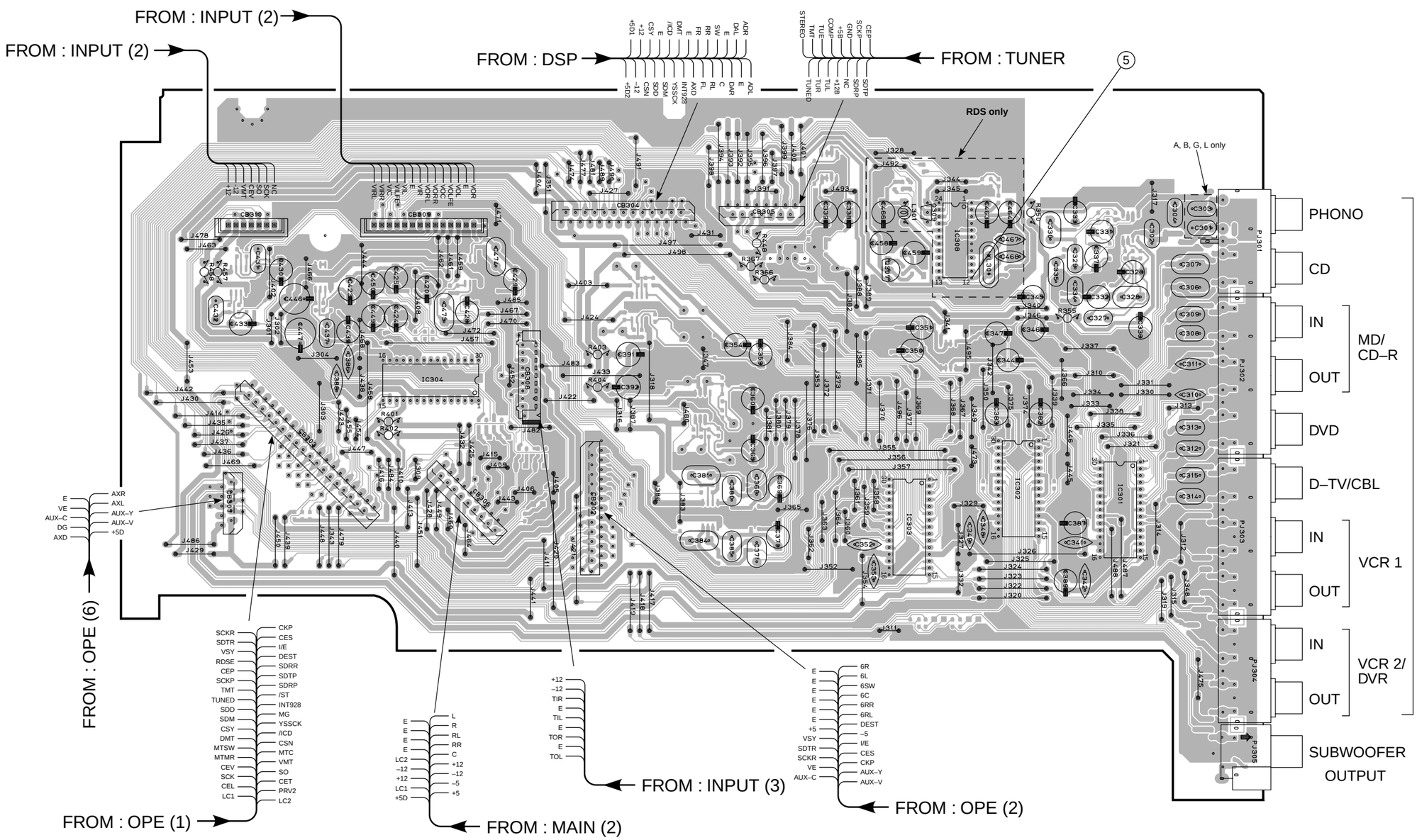

Point ⑤ (Pin 12 of IC308)
V : 1V/div, H : 0.2 µsec/div
DC, 1 : 1 probe

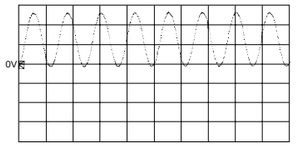

■ PRINTED CIRCUIT BOARD (Foil side)

● **Semiconductor Location**

Ref. No.	Location
D301	E2

Ref. No.	Location
IC311	F2
IC312	E2
IC313	F3
IC314	D3
IC315	D3
IC316	E4
IC317	B2
IC319	C2
IC320	C2

Ref. No.	Location
Q301	F4
Q302	F4
Q303	D3
Q304	D3
Q305	D3
Q306	C3
Q308	D3

INPUT (1) P. C. B. (Surface Mount Device)

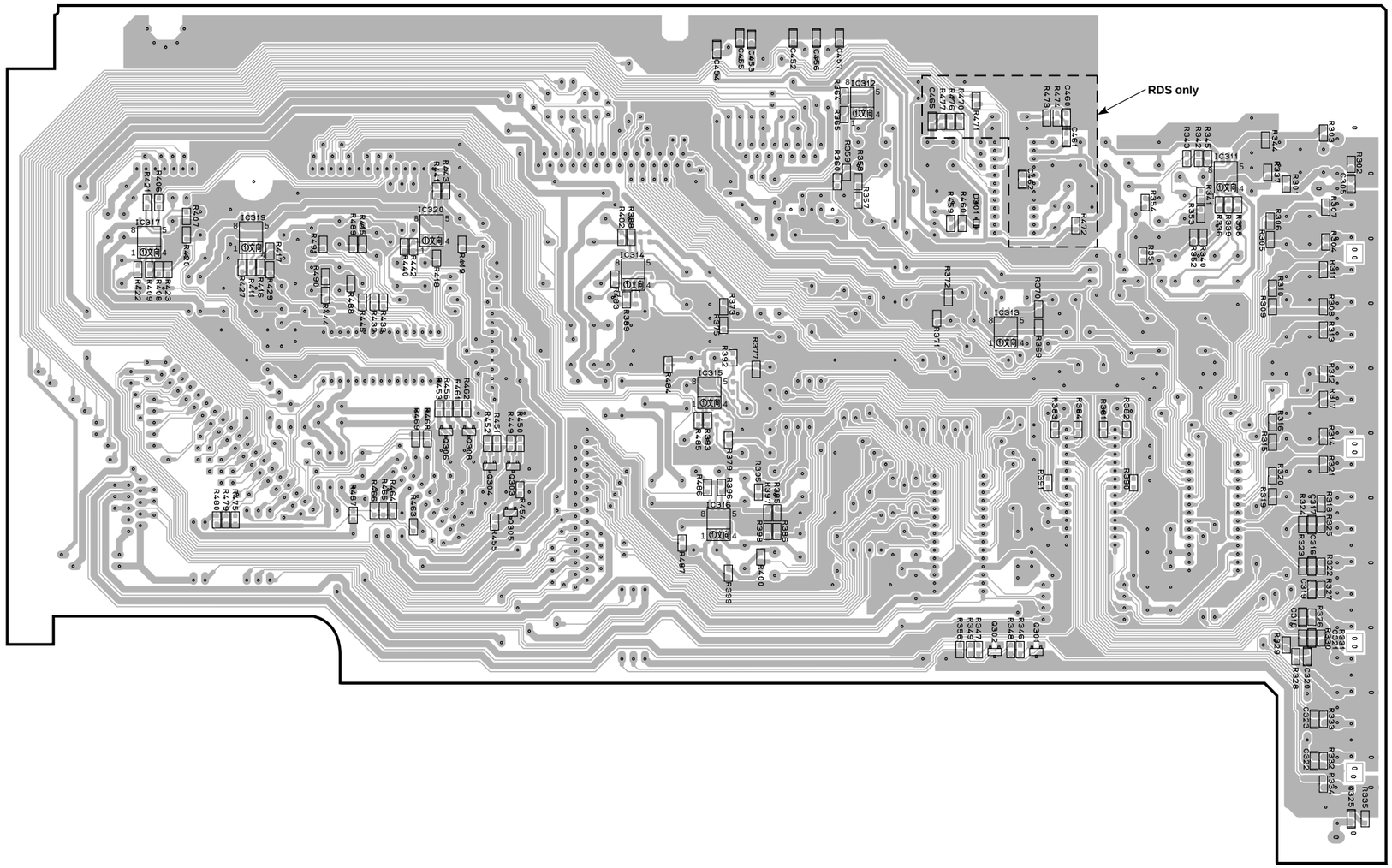

■ PRINTED CIRCUIT BOARD (Foil side)

INPUT (2) P. C. B.

(Lead Type Device)

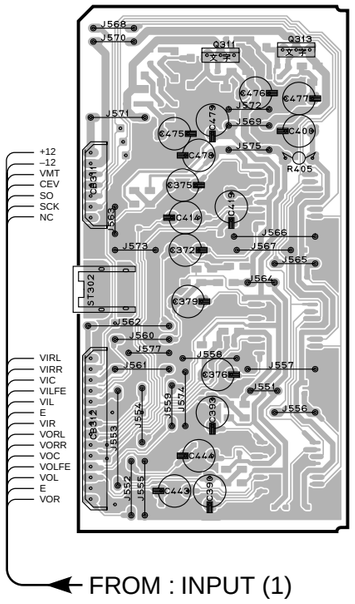

INPUT (2) P. C. B.

(Surface Mount Device)

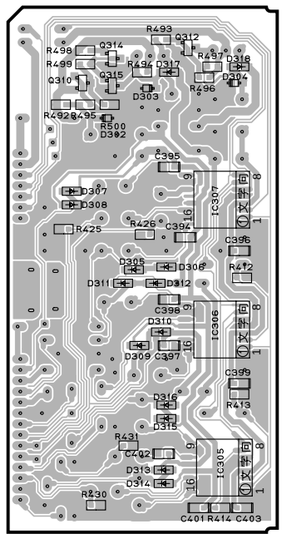

INPUT (3) P. C. B.

(Lead Type Device)

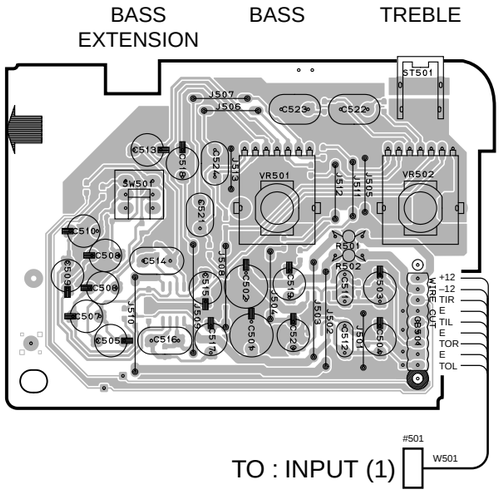

INPUT (3) P. C. B.

(Surface Mount Device)

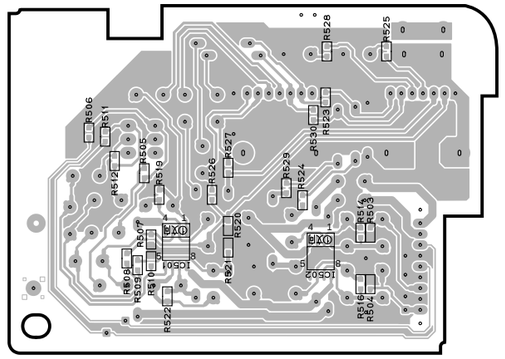

● **Semiconductor Location**

Ref. No.	Location
D302	C2
D303	C2
D304	C2
D305	C2
D306	C2
D307	C2
D308	C2
D309	C2
D310	C2
D311	C2
D312	C2
D313	C3
D314	C3
D315	C3
D316	C3
D317	C2
D318	C2

Ref. No.	Location
IC305	C3
IC306	C2
IC307	C2
IC501	G2
IC502	G2

Ref. No.	Location
Q310	D4
Q311	C4
Q312	B3
Q313	D4
Q314	B3
Q315	B3

■ PRINTED CIRCUIT BOARD (Foil side)

OPERATION (2) P. C. B. (Lead Type Device)

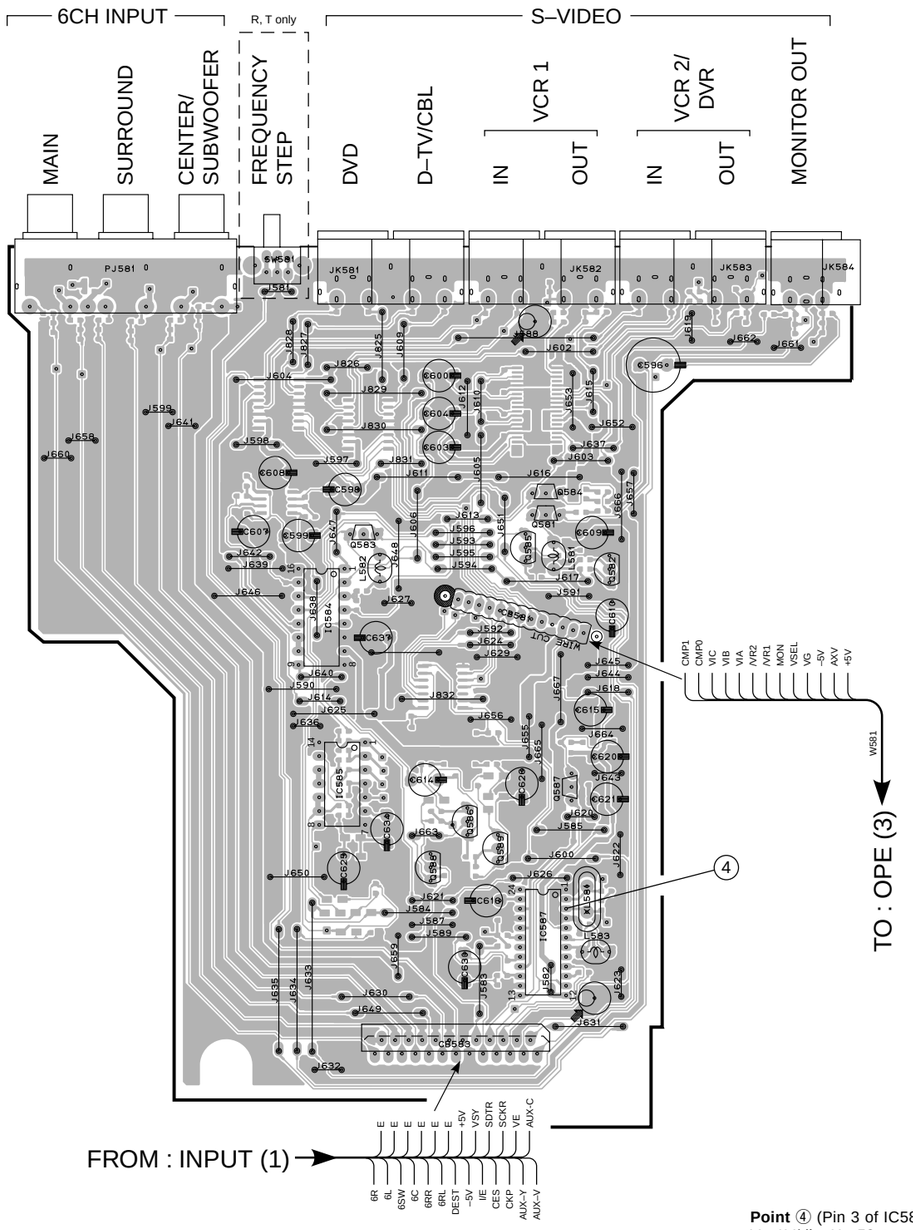

Point ④ (Pin 3 of IC587)
V : 1V/div, H : 50 nsec/div
DC, 1 : 1 probe

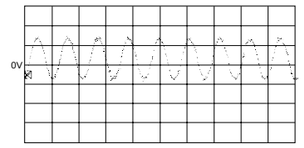

OPERATION (2) P. C. B. (Surface Mount Device)

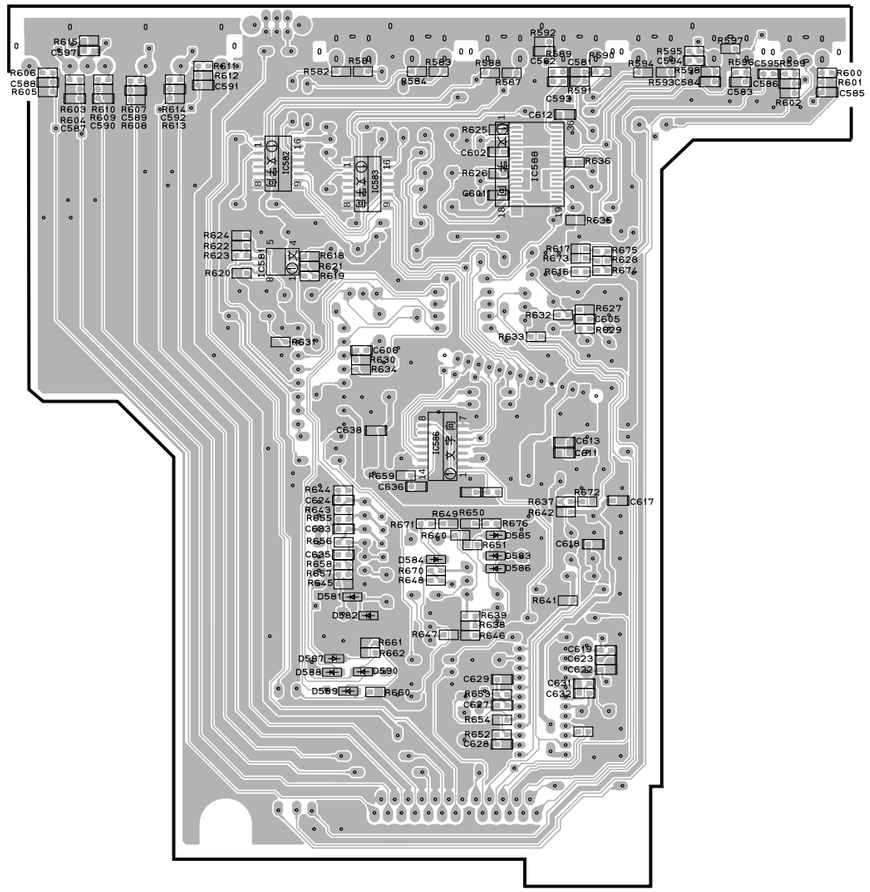

● **Semiconductor Location**

Ref. No.	Location
D581	E4
D582	E4
D583	F4
D584	F4
D585	F4
D586	F4
D587	E4
D588	E4
D589	E4
D590	E4

Ref. No.	Location
Q581	C3
Q582	C3
Q583	B3
Q584	C3
Q585	C3
Q586	B4
Q587	C4
Q588	B4
Q589	B4

Ref. No.	Location
IC581	E3
IC582	E3
IC583	E3
IC584	B3
IC585	B4
IC586	F3
IC587	C4
IC588	F3

■ PRINTED CIRCUIT BOARD (Foil side)

Point ② (Pin 38 of IC501)
V : 2V/div, H : 0.1 µsec/div
DC, 1 : 1 probe

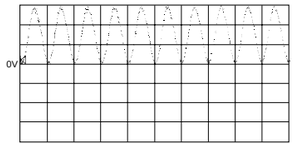

Point ③-A (/RES : Collector of Q510)
Point ③-B (S12 : Emitter of Q511)
V : 5V/div (S12), V : 2V/div (/RES)
DC, 1 : 1 probe, H : 1 sec/div

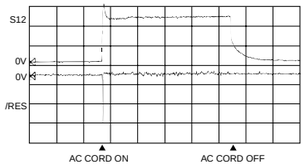

● **Semiconductor Location**

Ref. No.	Location
IC503	G3

Ref. No.	Location
Q501	E2
Q502	E2
Q503	E2
Q504	E2
Q505	E2
Q506	E2
Q507	F2
Q508	F2
Q509	F2
Q510	G2
Q511	G2

OPERATION (1) P. C. B. (Lead Type Device)

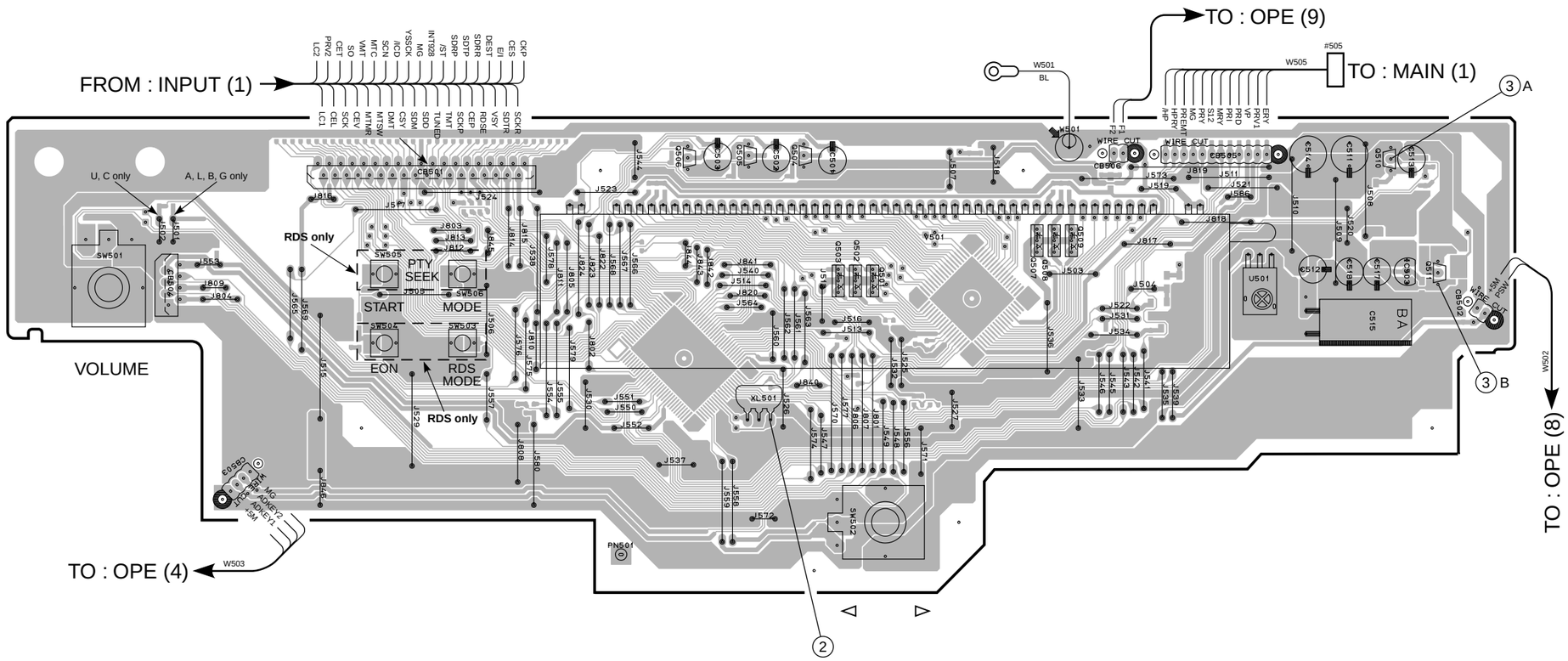

OPERATION (4) P. C. B. (Lead Type Device)

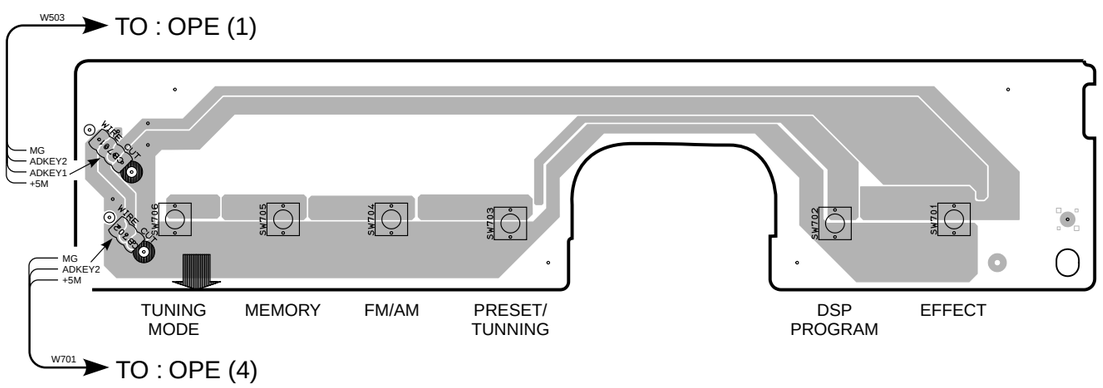

OPERATION (4) P. C. B. (Surface Mount Device)

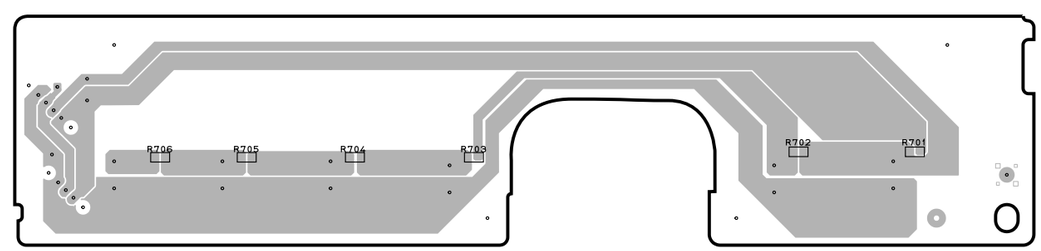

■ PRINTED CIRCUIT BOARD (Foil side)

● **Semiconductor Location**

Ref. No.	Location
D501	F2
D502	F2
D503	F2
D504	G2
D505	G2
D506	G2
D507	F2
D508	F2
D509	F2
D510	G2
D511	G2
D512	G2

Ref. No.	Location
IC501	D2
IC502	E2
IC681	F5
IC682	E5

OPERATION (1) P. C. B. (Surface Mount Device)

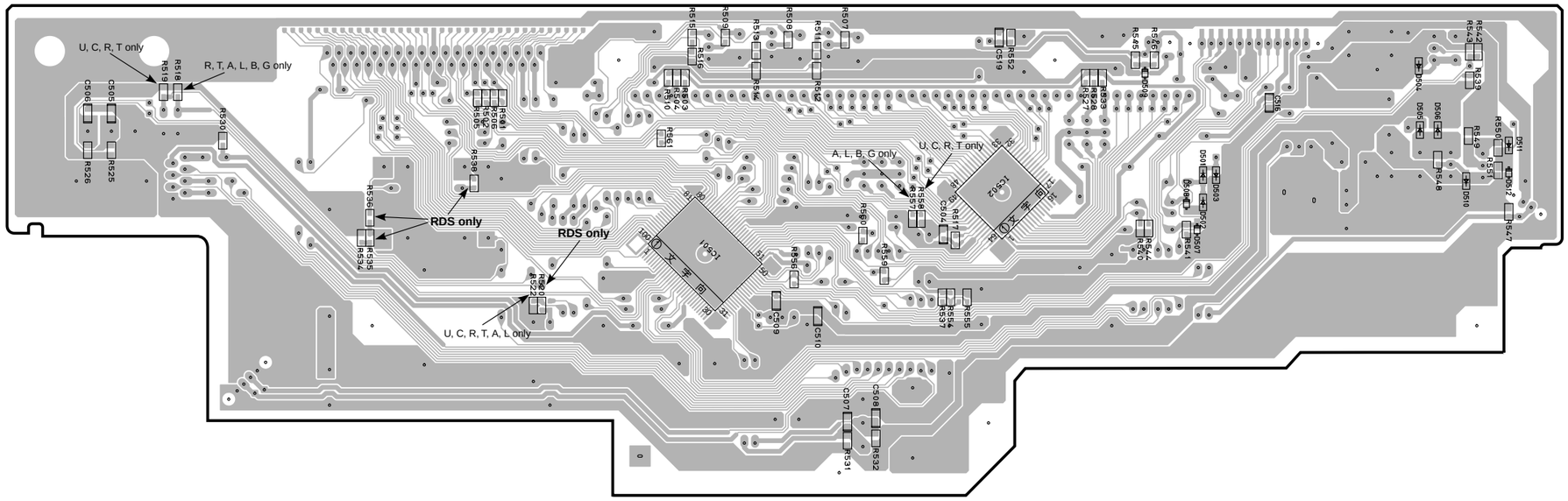

OPERATION (3) P. C. B. (Lead Type Device)

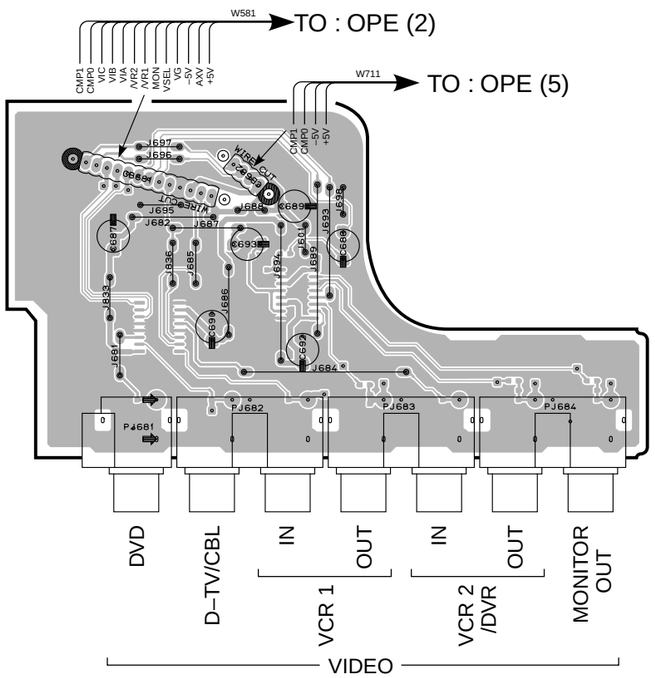

OPERATION (3) P. C. B. (Surface Mount Device)

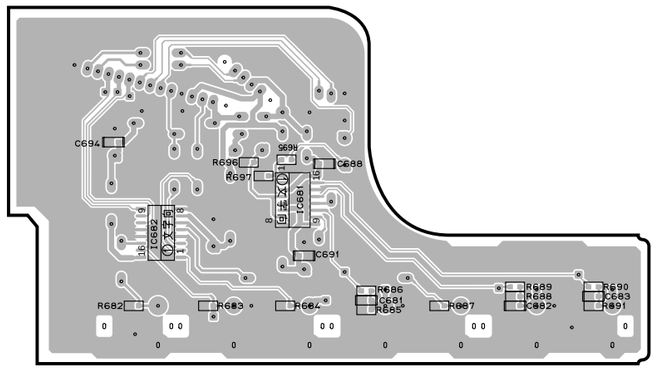

■ PRINTED CIRCUIT BOARD (Foil side)

OPERATION (5) P. C. B.

(Lead Type Device)

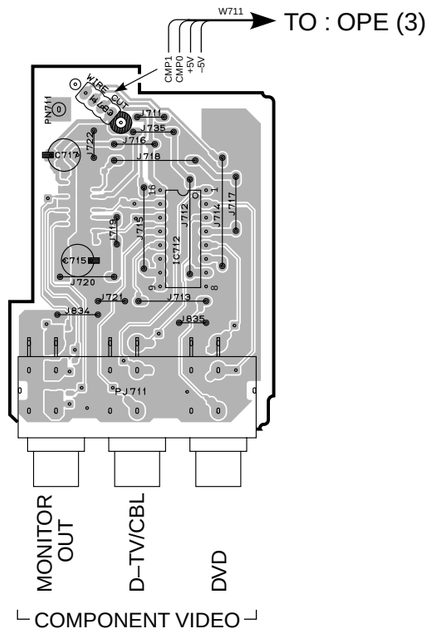

OPERATION (5) P. C. B.

(Surface Mount Device)

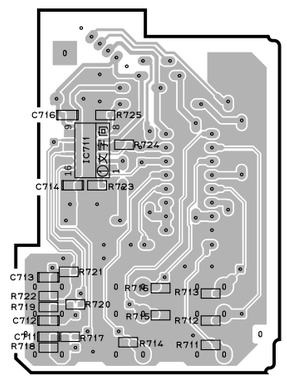

● **Semiconductor Location**

Ref. No.	Location
IC711	C2
IC712	B2

OPERATION (6) P. C. B. (Lead Type Device)

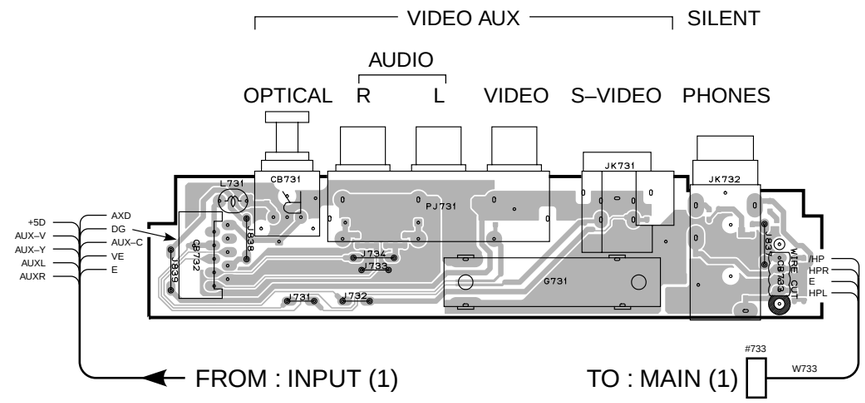

OPERATION (6) P. C. B. (Surface Mount Device)

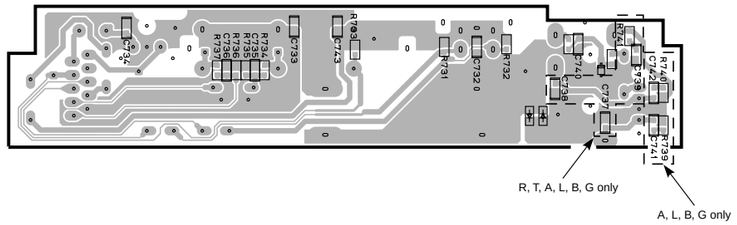

OPERATION (7) P. C. B.

(Lead Type Device)

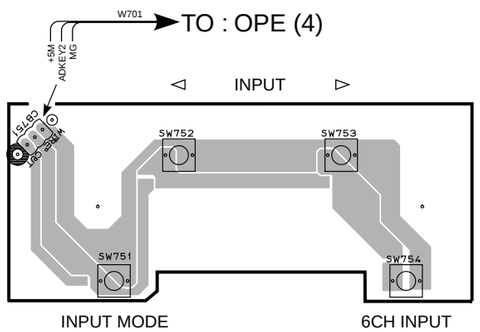

OPERATION (7) P. C. B.

(Surface Mount Device)

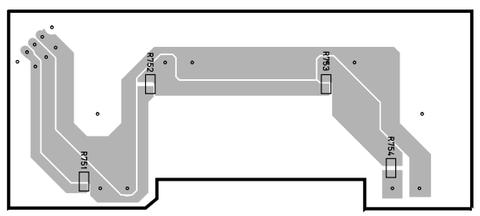

OPERATION (8) P. C. B.

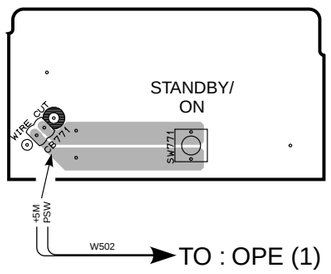

OPERATION (9) P. C. B.

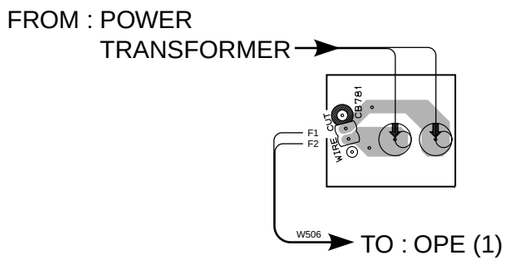

■ PRINTED CIRCUIT BOARD (Foil side)

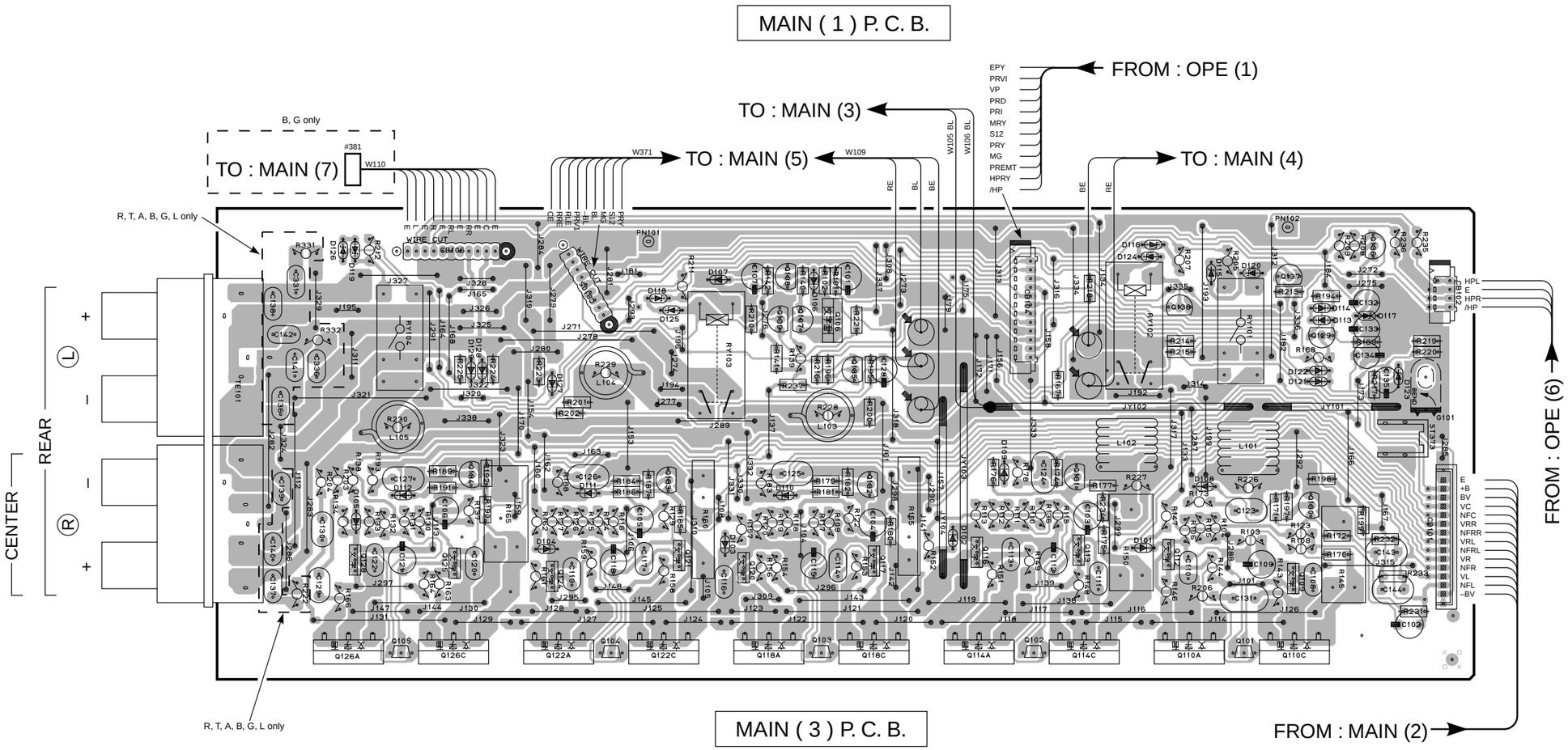

● Semiconductor Location

Ref. No.	Location	Ref. No.	Location
D101	E3	Q101	F4
D102	E3	Q102	E4
D103	D3	Q103	D4
D104	C3	Q104	C4
D105	B3	Q105	B4
D106	D2	Q106	D2
D107	D2	Q107	D2
D108	E3	Q108	D2
D109	E3	Q109	F3
D110	D3	Q110A	E4
D111	C3	Q110C	F4
D112	B3	Q112	E3
D113	F2	Q113	E3
D114	F2	Q114A	E4
D115	F2	Q114C	E4
D116	E2	Q116	E3
D117	F2	Q117	D3
D118	C2	Q118A	D4
D119	B2	Q118C	D4
D120	F2	Q120	D3
D121	F3	Q121	C3
D122	F3	Q122A	C4
D123	F2	Q122C	C4
D124	E2	Q124	C3
D125	C2	Q125	C3
D126	B2	Q126A	B4
D127	C2	Q126C	C4
D128	C2	Q128	B3
D129	C2	Q129	F2
		Q130	F3
		Q131	E3
		Q132	D3
		Q133	C3
		Q134	C3
		Q135	D2
		Q136	F2
		Q137	F2
		Q138	E2
		Q139	D2

Note : Mounting of C145, 146 shown as below.
(R, T, A, B, G, L models only)

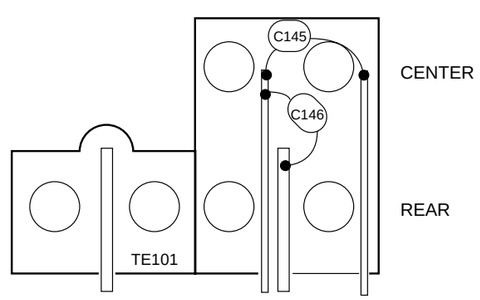

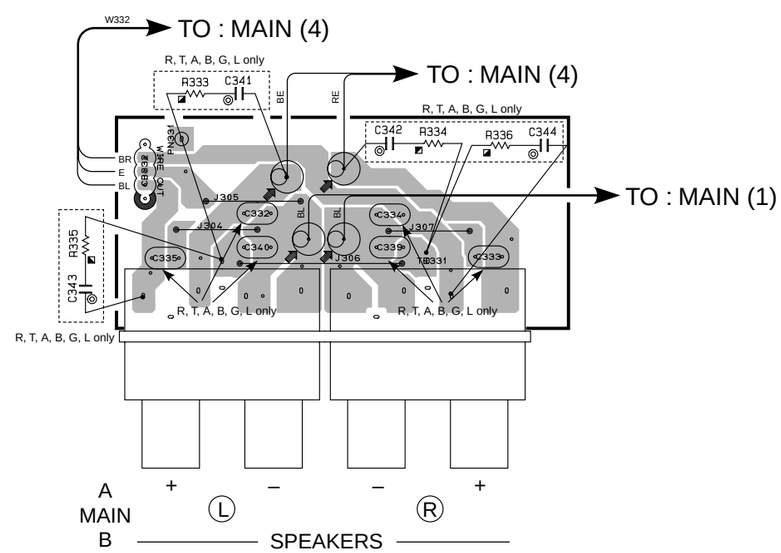

MAIN (4) P. C. B.

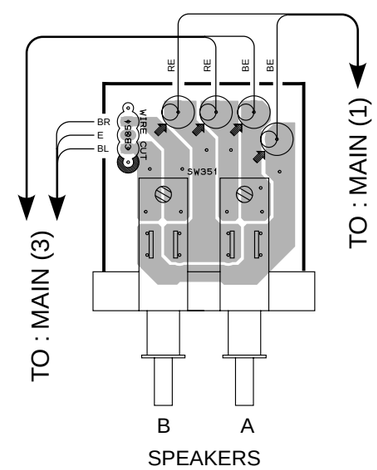

■ PRINTED CIRCUIT BOARD (Foil side)

MAIN (2) P. C. B.

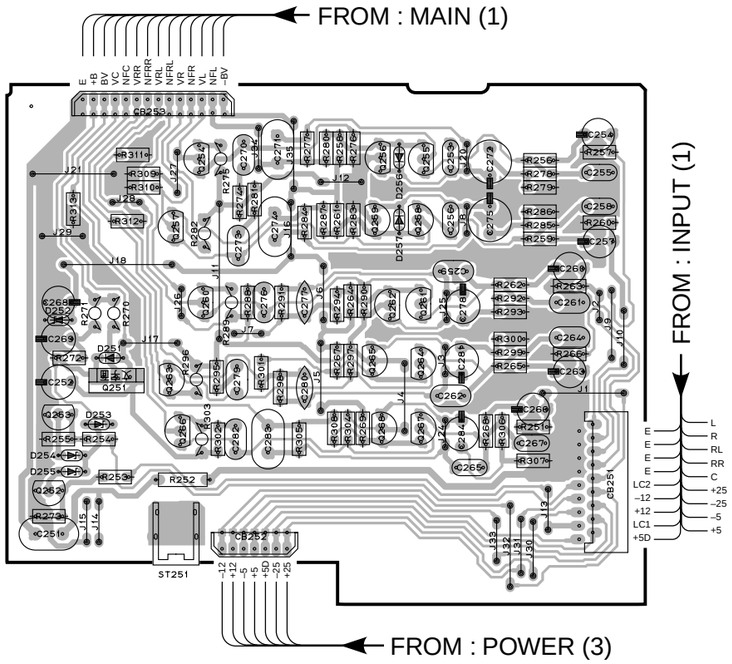

MAIN (5) P. C. B.

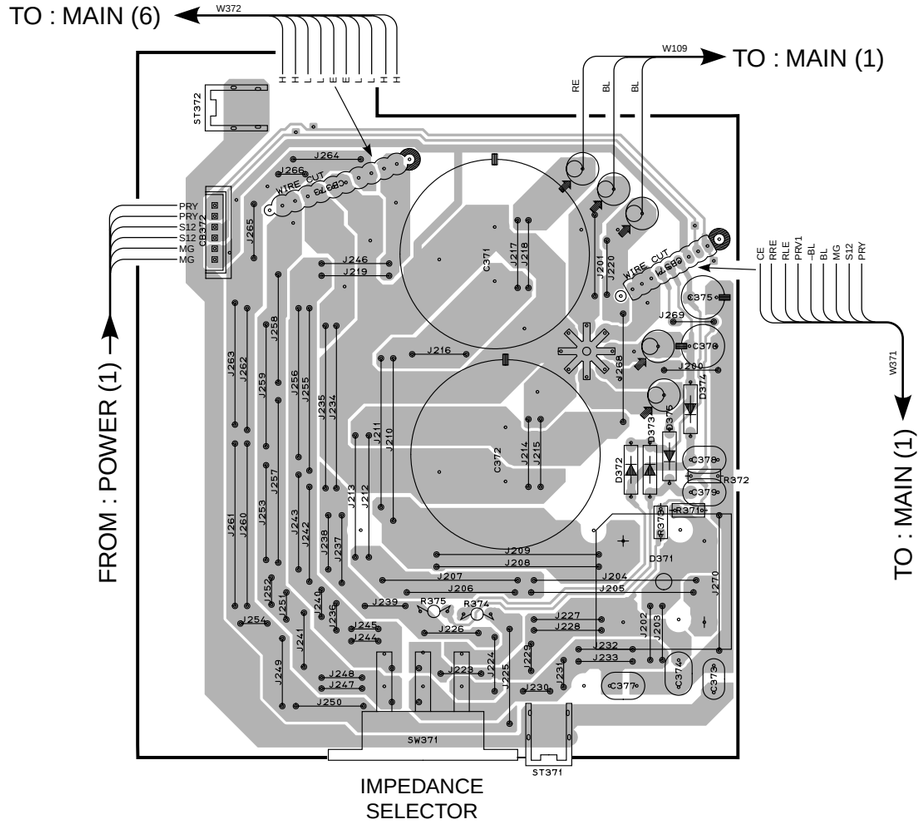

● **Semiconductor Location**

Ref. No.	Location
D251	A2
D252	A2
D253	A3
D254	A3
D255	A3
D256	B2
D257	B2
D371	F3
D372	F3
D373	F3
D374	F3
D375	F3

Ref. No.	Location
Q251	A2
Q252	A3
Q253	A3
Q254	A2
Q255	B2
Q256	B2
Q257	A2
Q258	B2
Q259	B2
Q260	A2
Q261	B2
Q262	B2
Q263	A2
Q264	B2
Q265	B2
Q266	A3
Q267	B3
Q268	B3

MAIN (6) P. C. B.

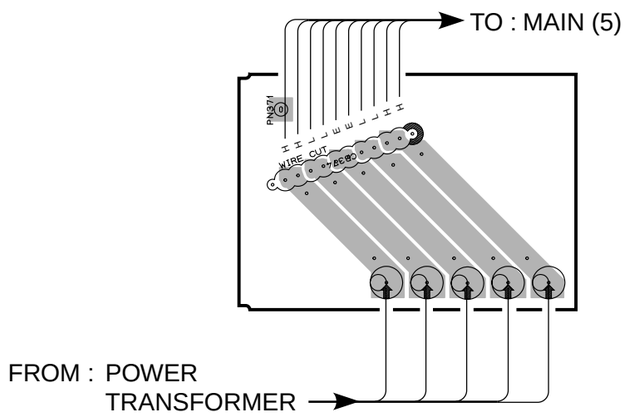

● **G, B models**

MAIN (7) P. C. B.

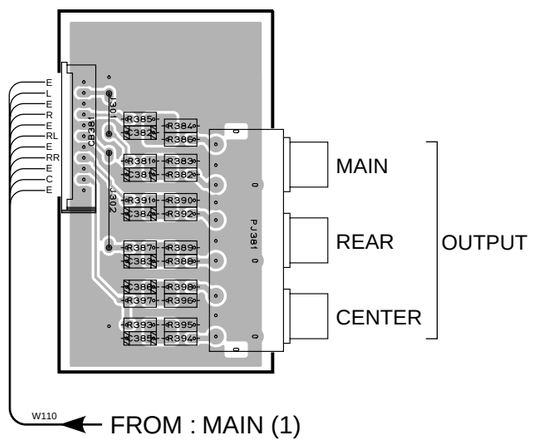

■ PRINTED CIRCUIT BOARD (Foil side)

● R, T models

POWER (1) P. C. B.

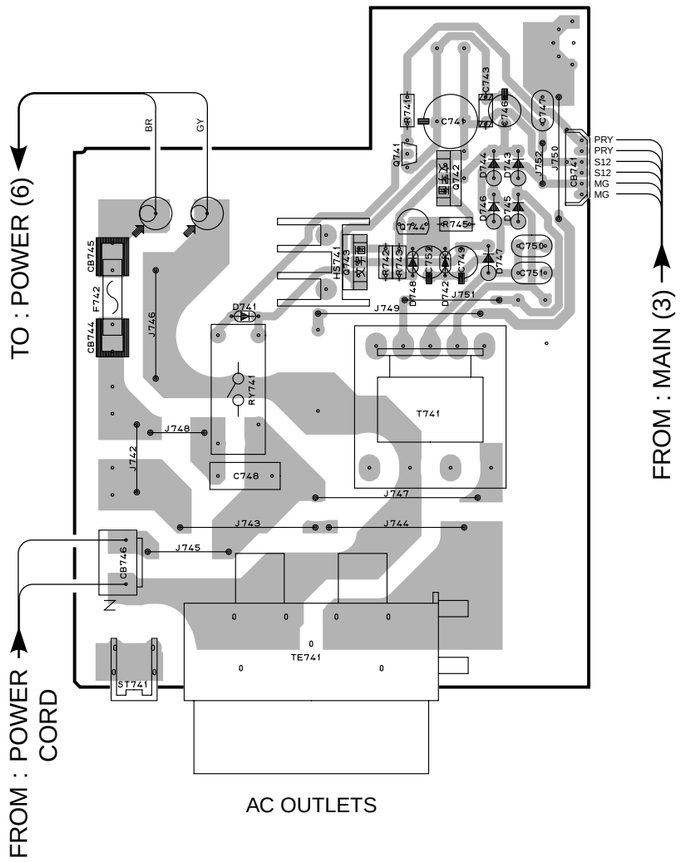

● U, C, A, B, G, L models

POWER (1) P. C. B.

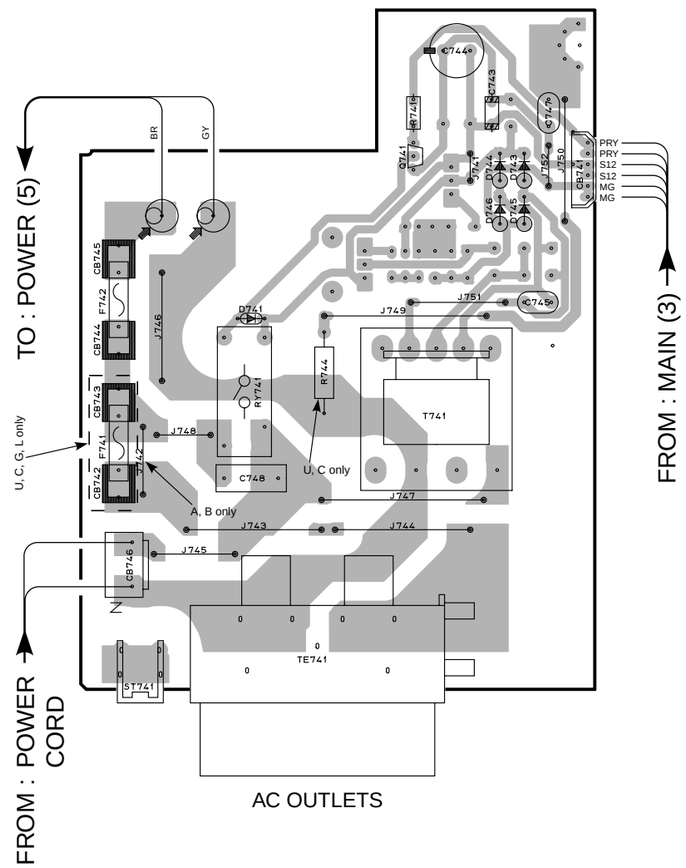

POWER (2) P. C. B.

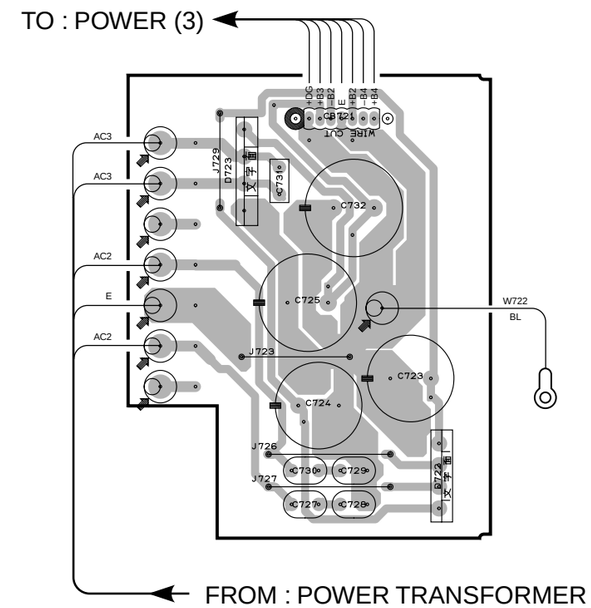

● Semiconductor Location

Ref. No.	Location
D722	G3
D723	G2
D741	B2/D2
D742	B2
D743	B2/E2
D744	B2/E2
D745	B2/E2
D746	B2/E2
D747	B2
D748	B2

Ref. No.	Location
IC701	F5
IC702	F5
IC703	F5
IC704	F5
IC705	E5

Ref. No.	Location
Q741	B2/E2
Q742	B2
Q743	B2
Q744	B2

POWER (3) P. C. B.

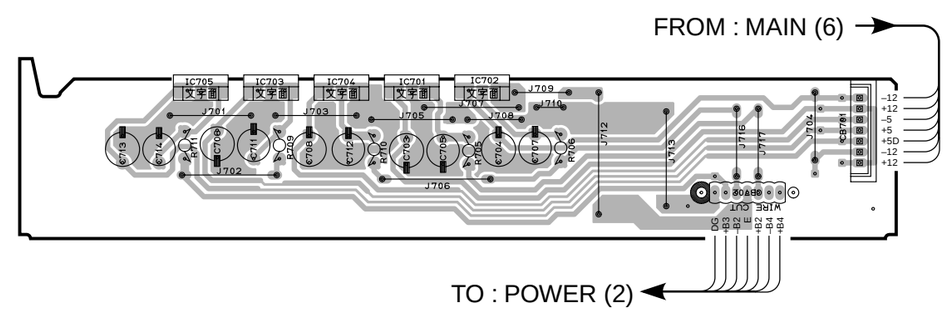

■ PRINTED CIRCUIT BOARD (Foil side)

● R, T models

POWER (6) P. C. B.

POWER (4) P. C. B.

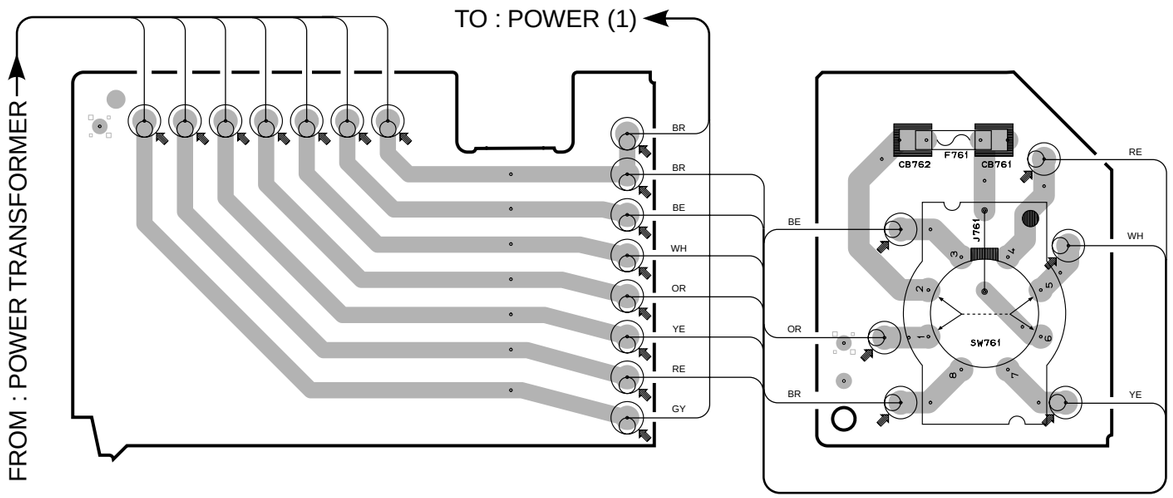

VOLTAGE SELECTOR

240V	1－2/5－6
220V	2－3/6－7
110V	3－4/7－8
120V	4－5/8－1

● U, C, A, B, G, L models

POWER (5) P. C. B.

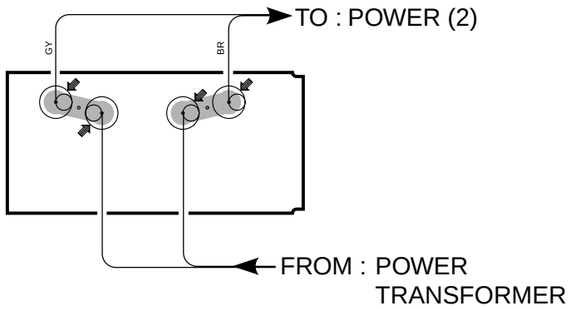

■ SCHEMATIC DIAGRAM (DSP)

Point ① (Pin 1 of IC801)
V : 2V/div, H : 50 nsec/div
DC, 1 : 1 probe

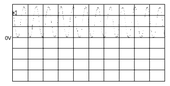

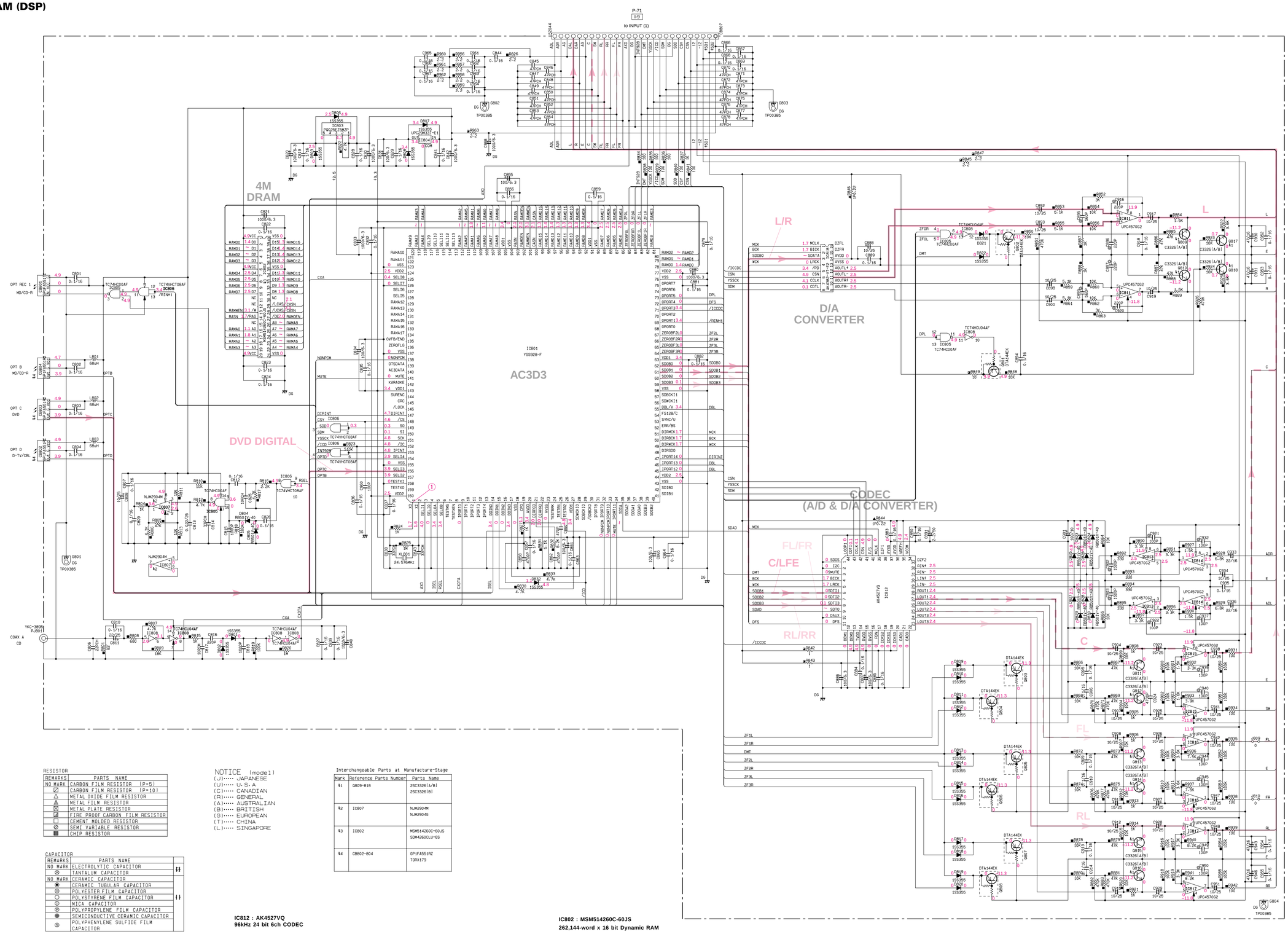

IC803 : PQ025EZ5MZP +2.5V Regulator

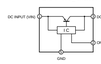

IC811, 813–817 : μPC4570G2
IC807 : NJM2904M-T1
Dual OP Amp

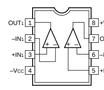

IC805 : TC74HC00AF
Quad 2 Input NAND

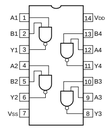

IC808 : TC74HCUO4AF-TP1
Hex Inverters

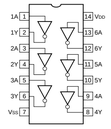

IC806 : TC74VHCT08AF
Quad 2 Input AND

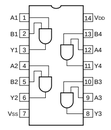

RESISTOR

REMARKS	PARTS NAME
NO MARK	CARBON FILM RESISTOR (P=5)
	CARBON FILM RESISTOR (P=10)
	METAL OXIDE FILM RESISTOR
	METAL FILM RESISTOR
	METAL PLATE RESISTOR
	FIRE PROOF CARBON FILM RESISTOR
	CEMENT MOLDED RESISTOR
	SEMI VARIABLE RESISTOR
	CHIP RESISTOR

CAPACITOR

REMARKS	PARTS NAME	
NO MARK	ELECTROLYTIC CAPACITOR	
	TANTALUM CAPACITOR	
NO MARK	CERAMIC CAPACITOR	
	CERAMIC TUBULAR CAPACITOR	
	POLYESTER FILM CAPACITOR	
	POLYSTYRENE FILM CAPACITOR	
	MICA CAPACITOR	
	POLYPROPYLENE FILM CAPACITOR	
	SEMICONDUCTIVE CERAMIC CAPACITOR	
	POLYPHENYLENE SULFIDE FILM CAPACITOR	

NOTICE (model)
(J)····· JAPANESE
(U)····· U.S.A
(C)····· CANADIAN
(R)····· GENERAL
(A)····· AUSTRALIAN
(B)····· BRITISH
(G)····· EUROPEAN
(T)····· CHINA
(L)····· SINGAPORE

Interchangeable Parts at Manufacture-Stage

Mark	Reference Parts Number	Parts Name
&1	Q809-818	2SC3326(A/B) 2SC3326(B)
&2	IC807	NJM2904M NJM2904G
&3	IC802	MSM514260C-60JS SDM4260CLU-6S
&4	CB802-804	GP1FA551RZ TQRX179

IC818 : AK4382-VT-E2
D/A Converter

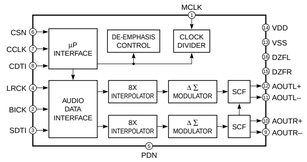

IC812 : AK4527VQ
96kHz 24 bit 6ch CODEC

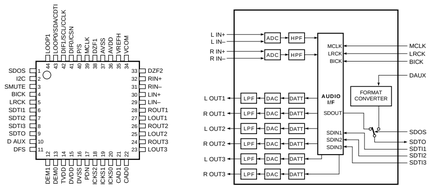

IC802 : MSM514260C-60JS
262,144-word x 16 bit Dynamic RAM

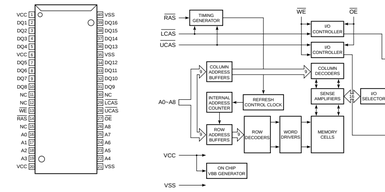

Conditions

- INPUT: DVD auto
- PROGRAM: PRO LOGIC DSP

* All voltage are measured with a 10MΩ/V DC electric volt meter.
* Components having special characteristics are marked ⚠ and must be replaced with parts having specifications equal to those originally installed.
* Schematic diagram is subject to change without notice.

■ SCHEMATIC DIAGRAM (INPUT 1/2)

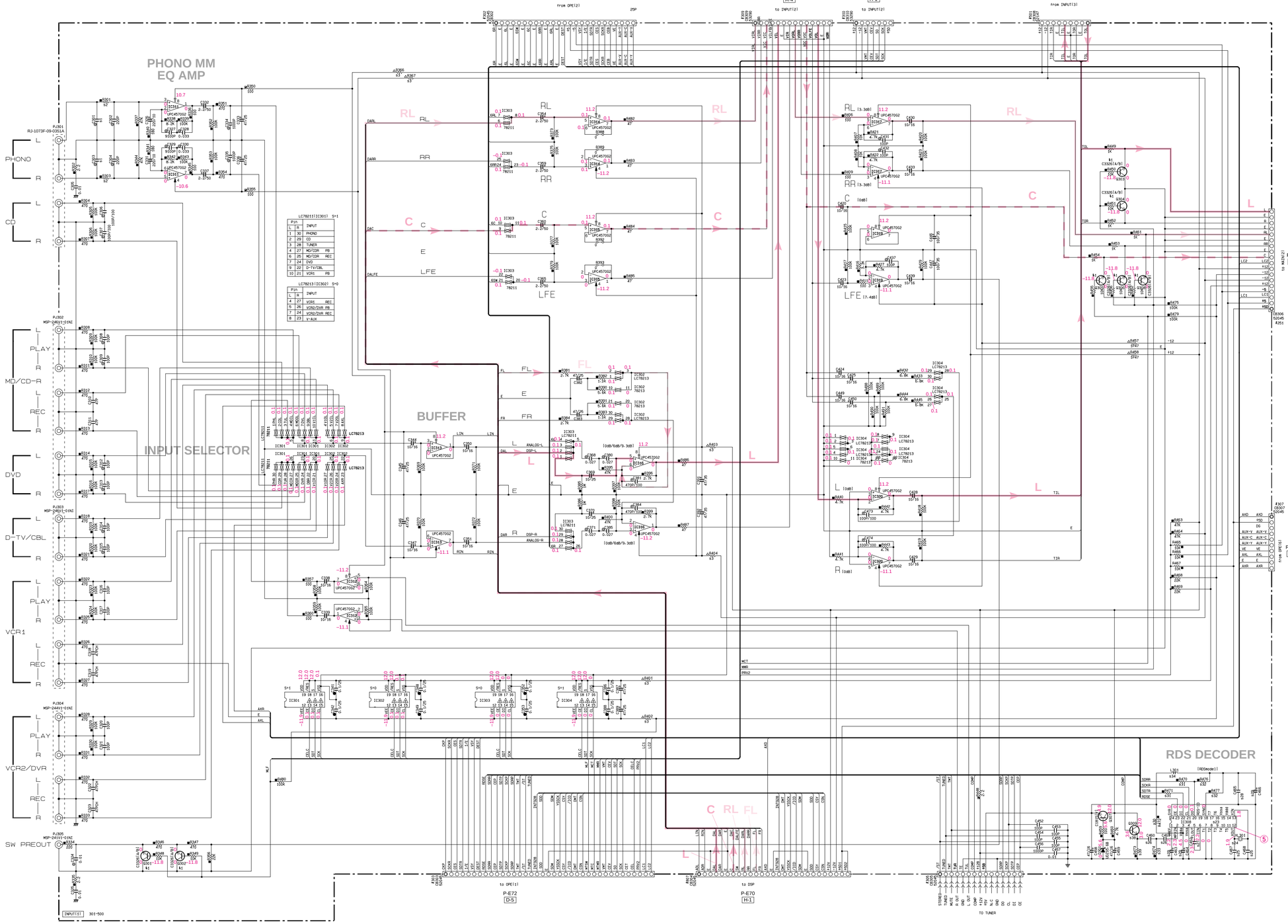

■ SCHEMATIC DIAGRAM (INPUT 2/2 & OPERATION 1/2)

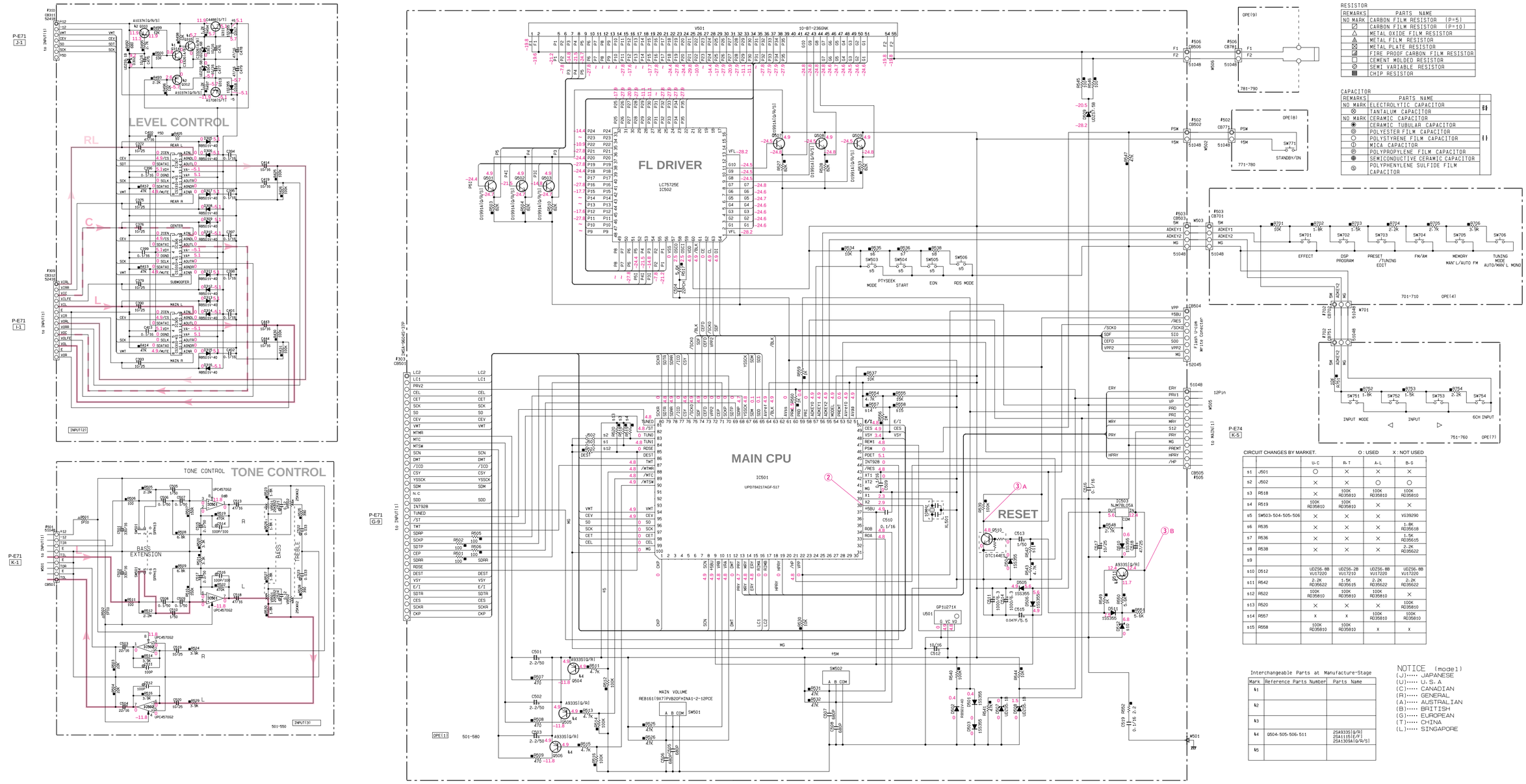

RESISTOR

REMARKS	PARTS NAME
NO MARK	CARBON FILM RESISTOR (P=5)
	CARBON FILM RESISTOR (P=10)
	METAL OXIDE FILM RESISTOR
	METAL FILM RESISTOR
	METAL PLATE RESISTOR
	FIRE PROOF CARBON FILM RESISTOR
	CEMENT MOLDED RESISTOR
	SEMI VARIABLE RESISTOR
	CHIP RESISTOR

CAPACITOR

REMARKS	PARTS NAME	
NO MARK	ELECTROLYTIC CAPACITOR	
	TANTALUM CAPACITOR	
NO MARK	CERAMIC CAPACITOR	
	CERAMIC TUBULAR CAPACITOR	
	POLYESTER FILM CAPACITOR	
	POLYSTYRENE FILM CAPACITOR	
	MICA CAPACITOR	
	POLYPROPYLENE FILM CAPACITOR	
	SEMICONDUCTIVE CERAMIC CAPACITOR	
	POLYPHENYLENE SULFIDE FILM CAPACITOR	

CIRCUIT CHANGES BY MARKET. O : USED X : NOT USED

		U. C	R. T	A. L	B. G
s1	J501	○	×	×	×
s2	J502	×	×	○	○
s3	R518	×	100K RD35810	100K RD35810	100K RD35810
s4	R519	100K RD35810	100K RD35810	×	×
s5	SW503-504-505-506	×	×	×	VG39290
s6	R535	×	×	×	1-8K RD35618
s7	R536	×	×	×	1.5K RD35615
s8	R538	×	×	×	2-2K RD35622
s9					
s10	D512	UDZS6.8B VU17220	UDZS6.2B VU17210	UDZS6.8B VU17220	UDZS6.8B VU17220
s11	R542	2-2K RD35622	1.5K RD35615	2-2K RD35622	2-2K RD35622
s12	R522	100K RD35810	100K RD35810	100K RD35810	×
s13	R520	×	×	×	100K RD35810
s14	R557	x	x	100K RD35810	100K RD35810
s15	R558	100K RD35810	100K RD35810	x	x

Interchangeable Parts at Manufacture-Stage

Mark	Reference Parts Number	Parts Name
k1		
k2		
k3		
k4	Q504-505-506-511	2SA933S(Q/R) 2SA1115(E/F) 2SA1309A(Q/R/S)
k5		

NOTICE (model)
(J)····· JAPANESE
(U)····· U.S.A
(C)····· CANADIAN
(R)····· GENERAL
(A)····· AUSTRALIAN
(B)····· BRITISH
(G)····· EUROPEAN
(T)····· CHINA
(L)····· SINGAPORE

IC501, 502 : μPC4570G2
Dual OP-Amp

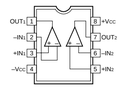

IC305~307 : CS3310-KSR
Stereo Digital Volume Control

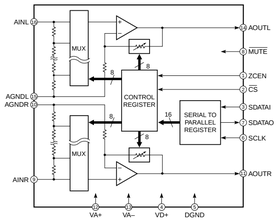

IC502 : LC75725E
FL Display Driver

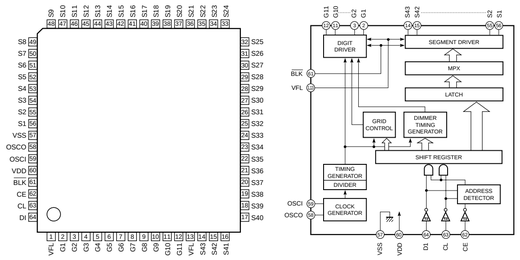

Point ② (Pin 38 of IC501)
V : 2V/div, H : 0.1 μsec/div
DC, 1 : 1 probe

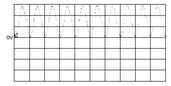

Point ③-A (/RES : Collector of Q510)
Point ③-B (S12 : Emitter of Q511)
V : 5V/div (S12), V : 2V/div (/RES)
DC, 1 : 1 probe, H : 1 sec/div

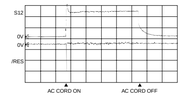

Conditions
- INPUT: DVD auto
- PROGRAM: PRO LOGIC DSP

* All voltage are measured with a 10MΩ/V DC electric volt meter.
* Components having special characteristics are marked ⚠ and must be replaced with parts having specifications equal to those originally installed.
* Schematic diagram is subject to change without notice.

■ SCHEMATIC DIAGRAM (OPERATION 2/2)

IC581 : TK15420M
Video Amp

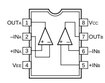

IC588 : LA7109
75Ω Video Driver

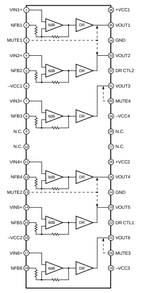

IC681 : LA7108M-TLM
75Ω Video Driver

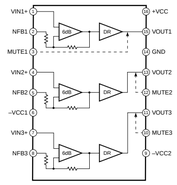

IC711 : LA7104M
Double Scart Interface

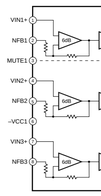

IC585 : TC74HCUO4AP
Hex Inverters

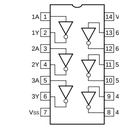

IC586 : TC74HC164AF-EL
8-Bit Shift Register

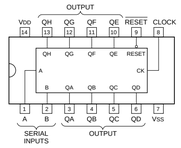

Xn[pin]	C	B	A	INPUT	REC OUT
X0 [3]	L	L	L	INHIBIT	INHIBIT
X1 [4]	L	L	H	DVD/LD	DVD/LD
X2 [5]	L	H	L	D-TV	D-TV
X3 [2]	L	H	H	INHIBIT	INHIBIT
X4 [1]	H	L	L	VCR1	VCR1
X5 [5]	H	L	H	VCR2/DVR	VCR2/DVR
X6 [2]	H	H	L	INHIBIT	INHIBIT
X7 [4]	H	H	H	V-AUX	V-AUX

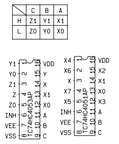

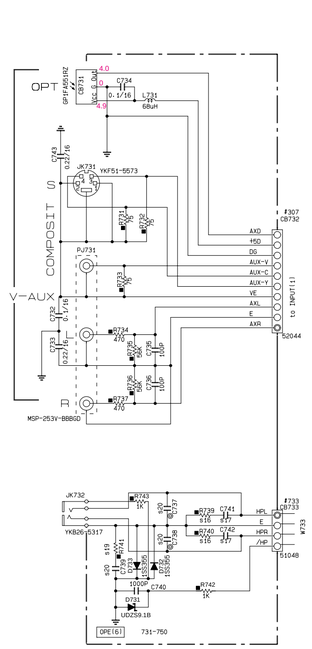

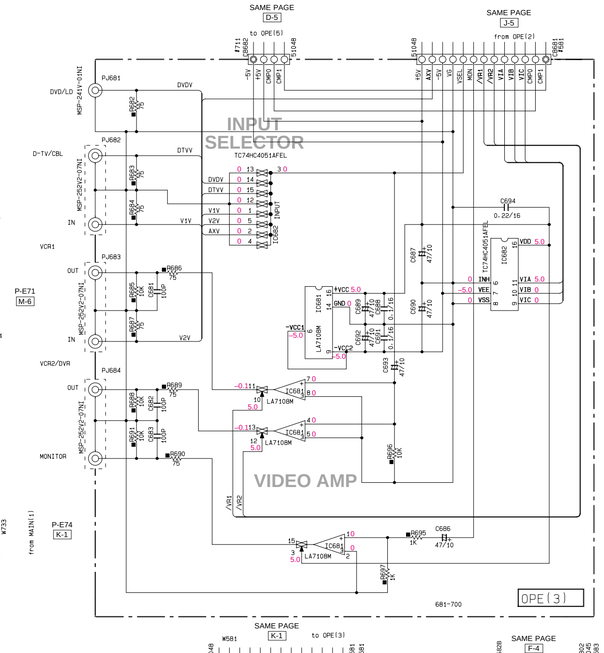

CIRCUIT CHANGES BY MARKET.

X : NOT USED
O : USED

		U-C	R-T	A-L	B-G
s16	R739-740	X	X	4.7 RD35347	4.7 RD35347
s17	C741-742	X	X	0.01 U506410	0.01 U506410
s18					
s19	R741	X	2.2 RD35322	2.2 RD35322	2.2 RD35322
s20	C737-739	X	0.01 U506410	0.01 U506410	0.01 U506410
s21	SW581	X	SS025- P022MJB V362430	X	X
s22	J581	X	O	X	X
s23	XL581	14.31818MHz VV94980	14.31818MHz VV94980	17.734475MHz VV94990	17.734475MHz VV94990
s24	C605	1500P U506315	1500P U506315	820P U506282	820P U506282
s25	C606	390P U506239	390P U506239	270P U506227	270P U506227

NOTICE (model)
(J)····· JAPANESE
(U)····· U.S.A
(C)····· CANADIAN
(R)····· GENERAL
(A)····· AUSTRALIAN
(B)····· BRITISH
(G)····· EUROPEAN
(T)····· CHINA
(L)····· SINGAPORE

Interchangeable Parts at Manufacture-Stage

Mark	Reference Parts Number	Parts Name
※11		
※12		
※13		
※14		
※15		
※16		

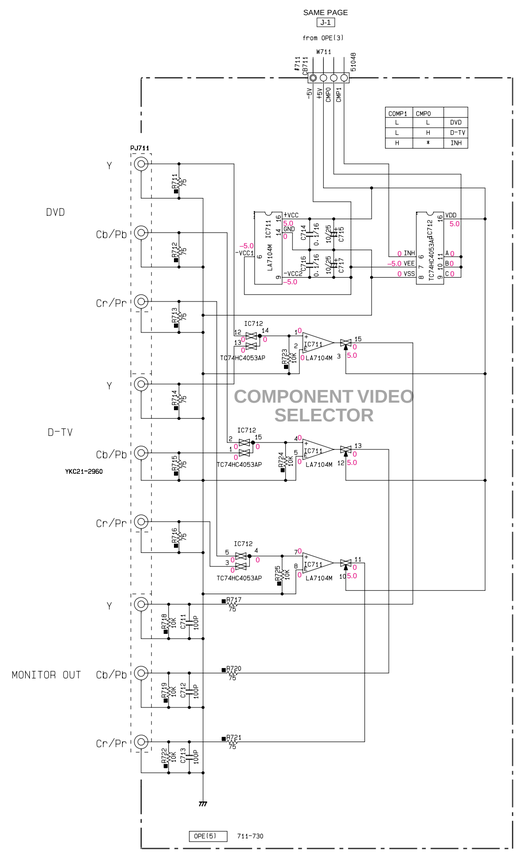

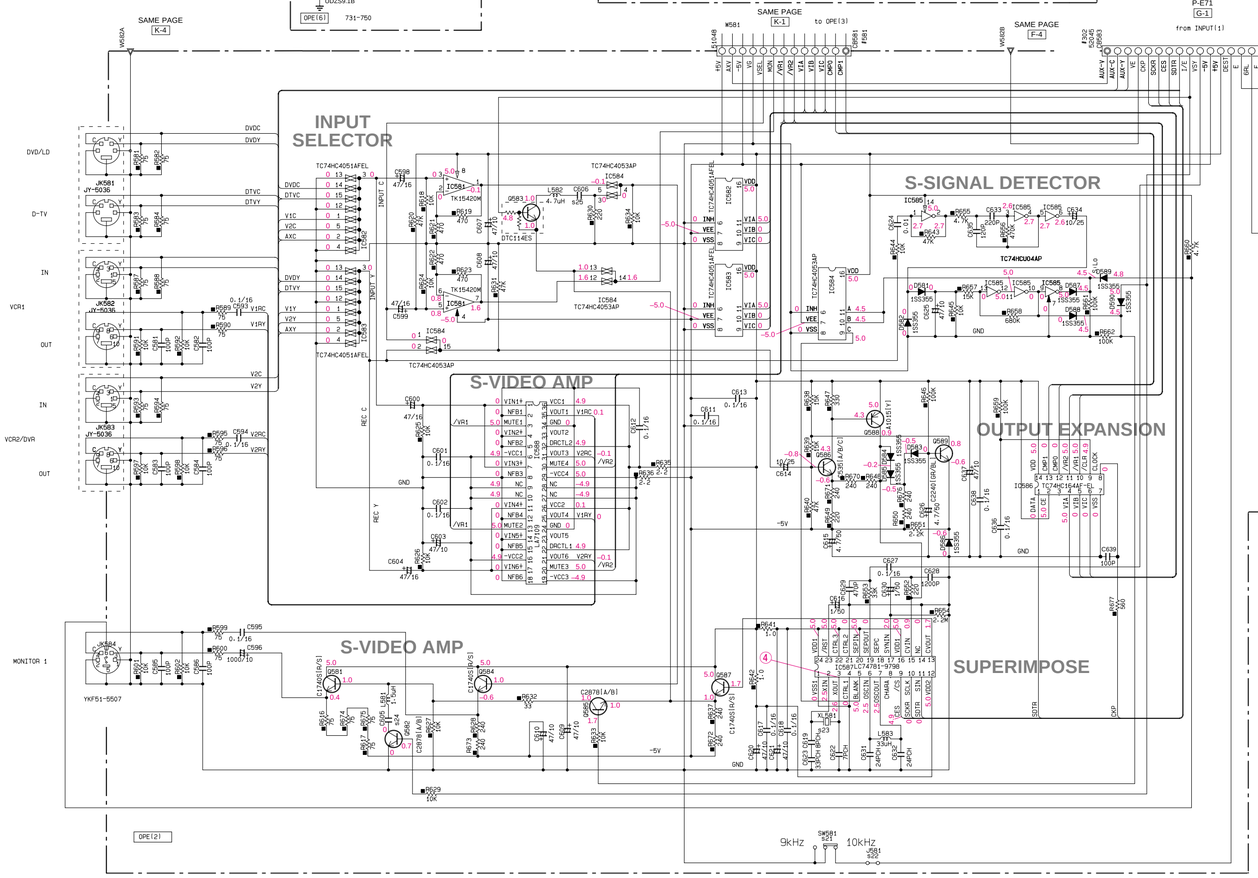

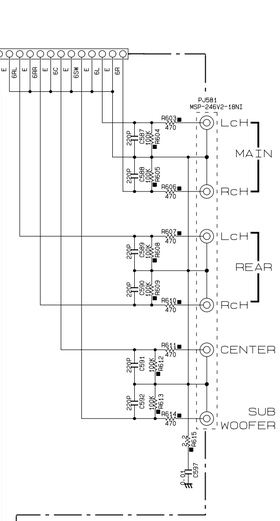

RESISTOR

REMARKS	PARTS NAME
NO MARK	CARBON FILM RESISTOR (P=5)
☑	CARBON FILM RESISTOR (P=10)
△	METAL OXIDE FILM RESISTOR
▲	METAL FILM RESISTOR
⊠	METAL PLATE RESISTOR
▨	FIRE PROOF CARBON FILM RESISTOR
□	CEMENT MOLDED RESISTOR
⊘	SEMI VARIABLE RESISTOR
■	CHIP RESISTOR

CAPACITOR

REMARKS	PARTS NAME	
NO MARK	ELECTROLYTIC CAPACITOR	⊟
⊗	TANTALUM CAPACITOR	⊟
NO MARK	CERAMIC CAPACITOR	⊥⊥
◉	CERAMIC TUBULAR CAPACITOR	⊥⊥
◎	POLYESTER FILM CAPACITOR	⊥⊥
○	POLYSTYRENE FILM CAPACITOR	⊥⊥
Ⓘ	MICA CAPACITOR	⊥⊥
ⓟ	POLYPROPYLENE FILM CAPACITOR	⊥⊥
●	SEMICONDUCTIVE CERAMIC CAPACITOR	⊥⊥
Ⓢ	POLYPHENYLENE SULFIDE FILM CAPACITOR	⊥⊥

IC582, 583, 682 : TC74HC4051AFEL
Analog Multiplexer/Demultiplexer

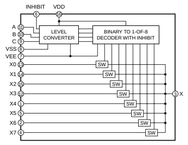

INPUT STATES				"ON" CHANNEL (S)
INHIBIT	C	B	A	
0	0	0	0	0
0	0	0	1	1
0	0	1	0	2
0	0	1	1	3
0	1	0	0	4
0	1	0	1	5
0	1	1	0	6
0	1	1	1	7
1	X	X	X	NONE

IC584, 712 : TC74HC4053AP
Triple 2-Channel Multiplexer/Demultiplexer

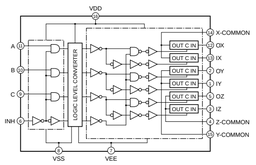

CONTROL INPUTS			"ON" CHANNEL
INHIBIT (Pin 6)	C (Pin 9)	B (Pin 10)	A (Pin 11)	OX (Pin 12), OY (Pin 2), OZ (Pin 5)
L	L	L	L	0X, 0Y, 0Z
L	L	L	H	1X, 0Y, 0Z
L	L	H	L	0X, 1Y, 0Z
L	L	H	H	1X, 1Y, 0Z
L	H	L	L	0X, 0Y, 1Z
L	H	L	H	1X, 0Y, 1Z
L	H	H	L	0X, 1Y, 1Z
L	H	H	H	1X, 1Y, 1Z
H	*	*	*	NONE

* Dont Care

Point ④ (Pin 3 of IC587)
V : 1V/div, H : 50 nsec/div
DC, 1 : 1 probe

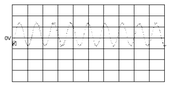

Conditions

- INPUT: DVD auto
- PROGRAM: PRO LOGIC DSP

* All voltage are measured with a 10MΩ/V DC electric volt meter.
* Components having special characteristics are marked ⚠ and must be replaced with parts having specifications equal to those originally installed.
* Schematic diagram is subject to change without notice.

■ SCHEMATIC DIAGRAM (MAIN 1/2)

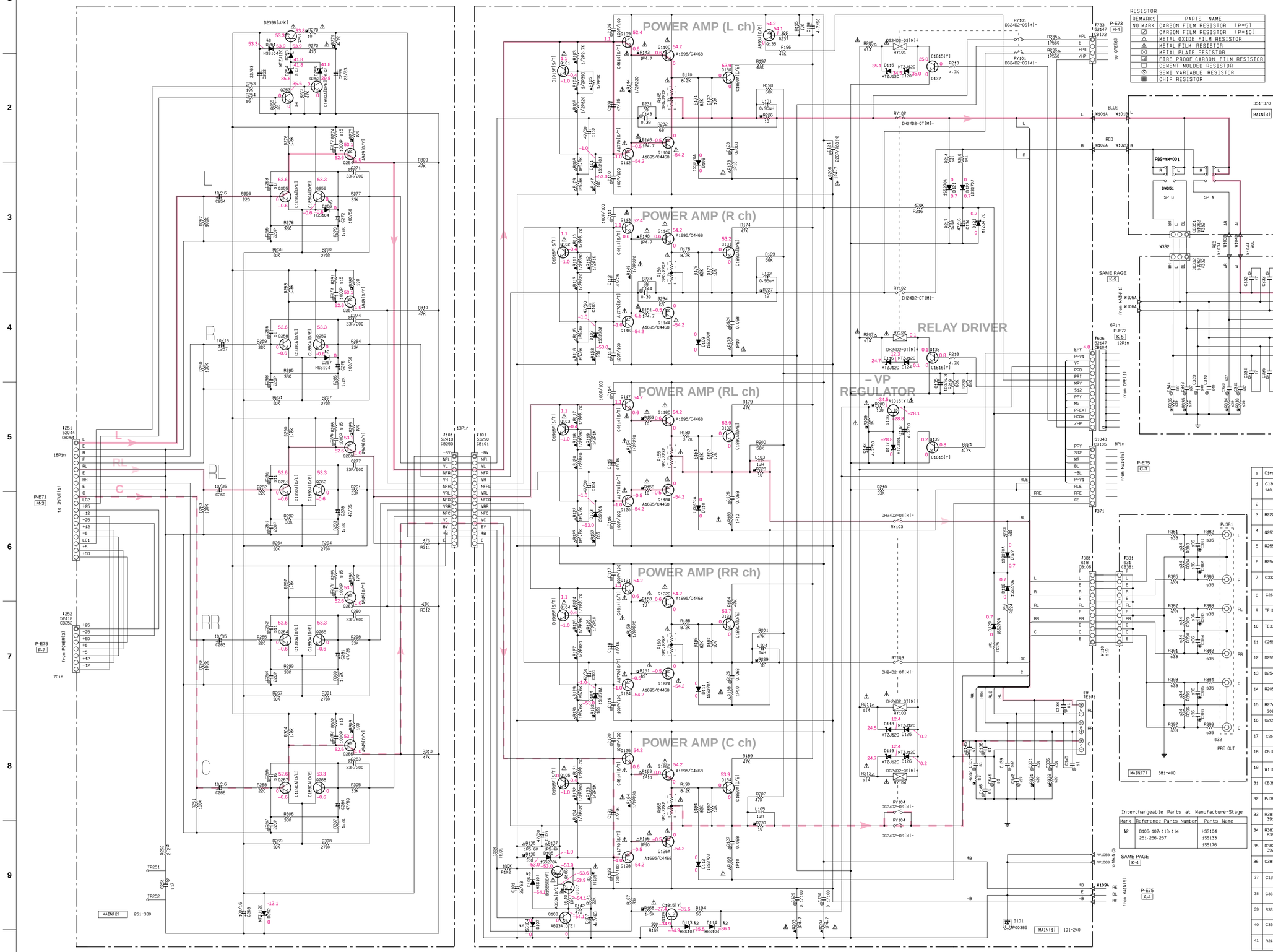

RESISTOR

REMARKS	PARTS NAME
NO MARK	CARBON FILM RESISTOR (P=5)
⊠	CARBON FILM RESISTOR (P=10)
△	METAL OXIDE FILM RESISTOR
▲	METAL FILM RESISTOR
⊠	METAL PLATE RESISTOR
▨	FIRE PROOF CARBON FILM RESISTOR
▭	CEMENT MOLDED RESISTOR
⊘	SEMI VARIABLE RESISTOR
■	CHIP RESISTOR

CAPACITOR

REMARKS	PARTS NAME
NO MARK	ELECTROLYTIC CAPACITOR
⊗	TANTALUM CAPACITOR
NO MARK	CERAMIC CAPACITOR
◉	CERAMIC TUBULAR CAPACITOR
◎	POLYESTER FILM CAPACITOR
○	POLYSTYRENE FILM CAPACITOR
⊕	MICA CAPACITOR
◎	POLYPROPYLENE FILM CAPACITOR
●	SEMICONDUCTIVE CERAMIC CAPACITOR
◎	POLYPHENYLENE SULFIDE FILM CAPACITOR

NOTICE (model)
(J)····· JAPANESE
(U)····· U.S.A
(C)····· CANADIAN
(R)····· GENERAL
(A)····· AUSTRALIAN
(B)····· BRITISH
(G)····· EUROPEAN
(T)····· CHINA
(L)····· SINGAPORE

CIRCUIT CHANGES BY MARKET. X : NOT USED

S	Circuit No.	model J	U	C	R-T-A	B-G	L
1	C136-138 140, 141, 145, 146	X	X	X	0.01 [UA65410]	0.01 [UA65410]	0.01 [UA65410]
2							
3	R222	X	X	X	4.7 [HV75347]	4.7 [HV75347]	4.7 [HV75347]
4	Q253	X	C1890A[D/E] [VP88310]	C1890A[D/E] [VP88310]	C1890A[D/E] [VP88310]	C1890A[D/E] [VP88310]	C1890A[D/E] [VP88310]
5	R255	X	47K [HF45747]	47K [HF45747]	47K [HF45747]	47K [HF45747]	47K [HF45747]
6	R254	X	10K [HF45710]	10K [HF45710]	10K [HF45710]	10K [HF45710]	10K [HF45710]
7	C332-335	X	X	X	4700P [V71630]	4700P [V71630]	4700P [V71630]
8	C253, 256	100P [VQ64560]	100P [VQ64560]	100P [VQ64560]	220P [VQ46260]	220P [VQ46260]	220P [VQ46260]
9	TE101	LTS0610-1009 [V677110]	LTS0610-1009 [V677110]	LTS0610-1009 [V677110]	LTS0610-1009 [V677110]	LTS0810-1007 [V591200]	LTS0810-1007 [V591200]
10	TE331	LTS0810-1011 [V677120]	LTS0810-1011 [V677120]	LTS0810-1011 [V677120]	LTS0810-1011 [V677120]	LTS0810-1012 [V591220]	LTS0810-1012 [V591220]
11	C259-262	100P [UA65210]	100P [UA65210]	100P [UA65210]	220P [UA65222]	220P [UA65222]	220P [UA65222]
12	D255	MTZJ10C [VG43960]	MTZJ12C [VG44030]	MTZJ12C [VG44030]	MTZJ12C [VG44030]	MTZJ12C [VG44030]	MTZJ10C [VG43960]
13	D254	X	MTZJ6.8B [VG43830]	MTZJ6.8B [VG43830]	MTZJ6.8B [VG43830]	MTZJ6.8B [VG43830]	MTZJ6.8B [VG43830]
14	R205-207-211-212	1P470 [VP94080]	1P560 [VP94090]	1P560 [VP94090]	1P470 [VP94080]	1P470 [VP94080]	1P470 [VP94080]
15	R274-281-288-295 302	150 [HF45515]	150 [HF45515]	150 [HF45515]	560 [HF45556]	560 [HF45556]	560 [HF45556]
16	C265	100P /100 [VR32500]	100P /100 [VR32500]	100P /100 [VR32500]	220P [VQ46260]	220P [VQ46260]	220P [VQ46260]
17	C251	220P/200 [VK53400]	220P/200 [VK53400]	220P/200 [VK53400]	1000P/100 [UT65310]	1000P/100 [UT65310]	1000P/100 [UT65310]
18	CB106	X	X	X	X	5104B [VI87890]	X
19	W110	X	X	X	X	MF01110	X
31	CB381	X	X	X	X	52151 [VK02700]	X
32	PJ381	X	X	X	X	VT00330 [V719040]	X
33	R381-385-387 391-393-397	X	X	X	X	10K [HF45710]	X
34	R383-384-389 R390-395-396	X	X	X	X	1K [HF45610]	X
35	R382-386-388 392-394-398	X	X	X	X	220 [HF45522]	X
36	C381-386	X	X	X	X	470P [VF46690]	X
37	C139, 142, 341-344	X	X	X	0.022 [UA65422]	0.022 [UA65422]	0.022 [UA65422]
38	C331, 336	X	X	X	0.033 [UA65433]	0.033 [UA65433]	0.033 [UA65433]
39	R331-336	X	X	X	2.2 [HV75322]	2.2 [HV75322]	2.2 [HV75322]
40	C339, 340	X	X	X	0.01 [V71670]	0.01 [V71670]	0.01 [V71670]
41	R214, 215, 223-225	47K [HF45747]	47K [HF45747]	47K [HF45747]	47K [HF45747]	47K [HF45747]	39K [HF45739]

Interchangeable Parts at Manufacture-Stage

Mark	Reference Parts Number	Parts Name
▲2	D106-107-113-114 251-256-257	HS104 1SS133 1SS176

Conditions
- INPUT: DVD auto
- PROGRAM: PRO LOGIC DSP

* All voltage are measured with a 10MΩ/V DC electric volt meter.
* Components having special characteristics are marked ⚠ and must be replaced with parts having specifications equal to those originally installed.
* Schematic diagram is subject to change without notice.

■ SCHEMATIC DIAGRAM (MAIN 2/2 & POWER)

CIRCUIT CHANGES BY MARKET.

X : NOT USED
O : USED

S		J	U	C	A-A-T	B-G-L
21						
22	SW371	X	SL13B-022AMCS [V410420]	SL13B-022AMCS [V410420]	SL13B-022AMCS [V410420]	SL13B-022AMCS [V410420]
23	J021-222	O	X	X	X	X

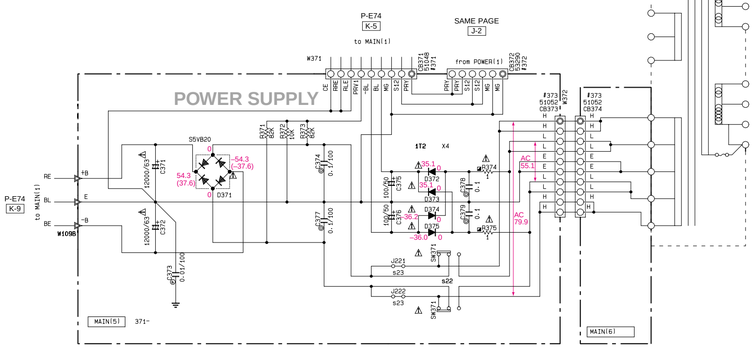

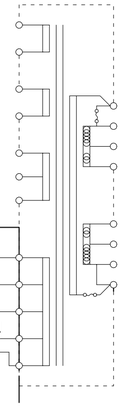

CIRCUIT CHANGES BY MARKET.

O : USED X : NOT USED

		J	U-C	A-T	A	B	G-L
s1	J741	O	O	X	O	O	O
s2	Q742-743	X	X	D2396[J/K] VR51080	X	X	X
s3	D747	X	X	1N4002S VV30770	X	X	X
s4	D748	X	X	1SS133 VD63160	X	X	X
s5	D742	X	X	MTZJ13A VG44040	X	X	X
s6	C746	X	X	10/100 UR89710	X	X	X
s7	T741	XW605	XW506	XW974	XW608	XW608	XW608
s8	TE741	VU54310	VU54310	VS86740	VT91500	VU54330	VU54340
s9	J742	O	X	O	O	O	X
s10	CB742-743	X	VP20650	X	X	X	VP20650
s11	F741	X	T2A125V VS80250	X	X	X	T2.5AH250V VT94250
s12	W763	X	X	MH02630	X	X	X
s13	W761	X	X	MH04630	X	X	X
s14	W765	X	X	MH03630	X	X	X
s15	W762	X	X	MH09630	X	X	X
s16	W764	X	X	MH06630	X	X	X
s17	W766	X	X	MH01630	X	X	X
s18	SW761	X	X	V718230	X	X	X
s19	CB761-762	X	X	VP20650	X	X	X
s20	F761	X	X	T4AL250V KB00079	X	X	X
s21	F742	8A125V VS82330	8A125V VS82330	8A125V VS82330	T4AL250V KB00079	T4AL250V KB00079	T4AL250V KB00079
s22	R744	X	1/2P2.2M V673000	X	X	X	X
s23							
s24							
s25							
s26	W741	MH08614	MH08614	MH08625	MH08614	MH08614	MH08614
s27	W742	MH01614	MH01614	MH01620	MH01614	MH01614	MH01614
s28							
S29	Q744	X	X	K247[Y] IE10262	X	X	X
S30	C749	X	X	10/50 UU16710	X	X	X
S31	C752	X	X	10/25 UU14710	X	X	X
S32	R742-745	X	X	100 HF45510	X	X	X
S33	R743	X	X	10K HF45710	X	X	X
S34	C745	0.01 UA65410	0.01 UA65410	X	0.01 UA65410	0.01 UA65410	0.01 UA65410
S35	C750-751	X	X	0.01 UA65410	X	X	X

Interchangeable Parts at Manufacture-Stage

Mark	Reference Parts Number	Parts Name
k11		
k12	RY741	SDT-S-112LMR DG12D1-01WIII ALK5321
k13	Q741	2SC1740S[R/S] 2SC2603[E/F] 2SC3311A[Q/R/S]
k14	D741-748	HSS104 1SS133 1SS176

NOTICE (model)
(J)····· JAPANESE
(U)····· U.S.A
(C)····· CANADIAN
(A)····· GENERAL
(A)····· AUSTRALIAN
(B)····· BRITISH
(G)····· EUROPEAN
(T)····· CHINA
(L)····· SINGAPORE

RESISTOR

REMARKS	PARTS NAME
NO MARK	CARBON FILM RESISTOR (P=5)
⊘	CARBON FILM RESISTOR (P=10)
△	METAL OXIDE FILM RESISTOR
◭	METAL FILM RESISTOR
⊠	METAL PLATE RESISTOR
◪	FIRE PROOF CARBON FILM RESISTOR
□	CEMENT MOLDED RESISTOR
⊘	SEMI VARIABLE RESISTOR
■	CHIP RESISTOR

CAPACITOR

REMARKS	PARTS NAME	
NO MARK	ELECTROLYTIC CAPACITOR	⊟
⊗	TANTALUM CAPACITOR	⊟
NO MARK	CERAMIC CAPACITOR	⫼
◉	CERAMIC TUBULAR CAPACITOR	⫼
◎	POLYESTER FILM CAPACITOR	⫼
○	POLYSTYRENE FILM CAPACITOR	⫼
ⓘ	MICA CAPACITOR	⫼
ⓟ	POLYPROPYLENE FILM CAPACITOR	⫼
●	SEMICONDUCTIVE CERAMIC CAPACITOR	⫼
Ⓢ	POLYPHENYLENE SULFIDE FILM CAPACITOR	⫼

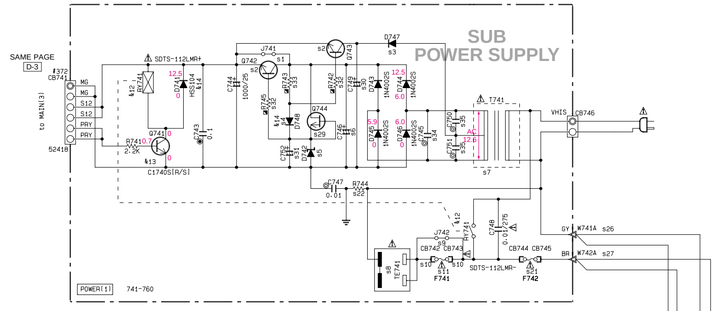

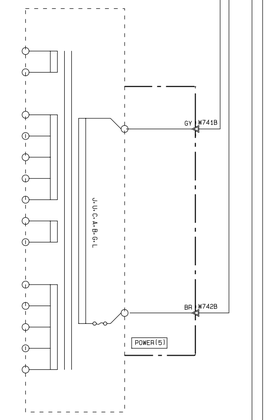

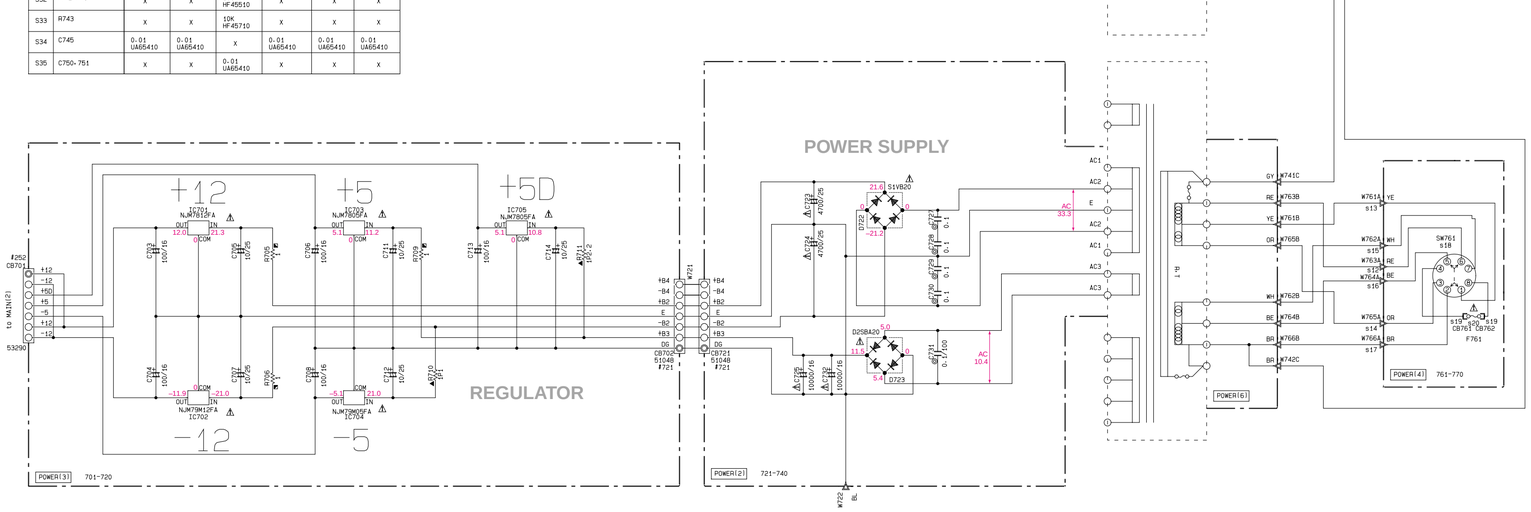

Conditions

- INPUT: DVD auto
- PROGRAM: PRO LOGIC DSP

* All voltage are measured with a 10MΩ/V DC electric volt meter.
* Components having special characteristics are marked ⚠ and must be replaced with parts having specifications equal to those originally installed.
* Schematic diagram is subject to change without notice.

PARTS LIST

■ ELECTRICAL PARTS

■ **WARNING**
Components having special characteristics are marked ⚠ and must be replaced with parts having specifications equal to those originally installed.

- Carbon resistors (1/6W or 1/4W) are not included in the ELECTRICAL PARTS List. For the parts No. of the carbon resistors, refer to last page.
- Chip resistors are listed on page 88.

ABBREVIATIONS IN THIS LIST ARE AS FOLLOWS :

C.A.EL.CHP	:	CHIP ALUMI. ELECTROLYTIC CAP
C.CE	:	CERAMIC CAP
C.CE.ARRAY	:	CERAMIC CAP ARRAY
C.CE.CHP	:	CHIP CERAMIC CAP
C.CE.ML	:	MULTILAYER CERAMIC CAP
C.CE.M.CHP	:	CHIP MULTILAYER CERAMIC CAP
C.CE.SAFTY	:	RECOGNIZED CERAMIC CAP
C.CE.TUBLR	:	CERAMIC TUBULAR CAP
C.CE.SMI	:	SEMI CONDUCTIVE CERAMIC CAP
C.EL	:	ELECTROLYTIC CAP
C.MICA	:	MICA CAP
C.ML.FLM	:	MULTILAYER FILM CAP
C.MP	:	METALLIZED PAPER CAP
C.MYLAR	:	MYLAR FILM CAP
C.MYLAR.ML	:	MULTILAYER MYLAR FILM CAP
C.PAPER	:	PAPER CAPACITOR
C.PLS	:	POLYSTYRENE FILM CAP
C.POL	:	POLYESTER FILM CAP
C.POLY	:	POLYETHYLENE FILM CAP
C.PP	:	POLYPROPYLENE FILM CAP
C.TNTL	:	TANTALUM CAP
C.TNTL.CHP	:	CHIP TANTALUM CAP
C.TRIM	:	TRIMMER CAP
CN	:	CONNECTOR
CN.BS.PIN	:	CONNECTOR, BASE PIN
CN.CANNON	:	CONNECTOR, CANNON
CN.DIN	:	CONNECTOR, DIN
CN.FLAT	:	CONNECTOR, FLAT CABLE
CN.POST	:	CONNECTOR, BASE POST
COIL.MX.AM	:	COIL, AM MIX
COIL.AT.FM	:	COIL, FM ANTENNA
COIL.DT.FM	:	COIL, FM DETECT
COIL.MX.FM	:	COIL, FM MIX
COIL.OUTPT	:	OUTPUT COIL
DIOD.ARRAY	:	DIODE ARRAY
DIODE.BRG	:	DIODE BRIDGE
DIODE.CHP	:	CHIP DIODE
DIODE.SHOT	:	SCHOTTKY BARRIER DIODE
DIODE.VAR	:	VARACTOR DIODE
DIOD.Z.CHP	:	CHIP ZENER DIODE
DIODE.ZENR	:	ZENER DIODE
DSCR.CE	:	CERAMIC DISCRIMINATOR
FER.BEAD	:	FERRITE BEADS
FER.CORE	:	FERRITE CORE
FET.CHP	:	CHIP FET
FL.DSPLY	:	FLUORESCENT DISPLAY
FLTR.CE	:	CERAMIC FILTER
FLTR.COMB	:	COMB FILTER MODULE
FLTR.LC.RF	:	LC FILTER ,EMI
GND.MTL	:	GROUND PLATE
GND.TERM	:	GROUND TERMINAL
HOLDER.FUS	:	FUSE HOLDER
IC.PRTCT	:	IC PROTECTOR
JUMPER.CN	:	JUMPER CONNECTOR
JUMPER.TST	:	JUMPER, TEST POINT
L.DTCT	:	LIGHT DETECTING MODULE
L.EMIT	:	LIGHT EMITTING MODULE
LED.DSPLY	:	LED DISPLAY
LED.INFRD	:	LED, INFRARED
MODUL.RF	:	MODULATOR, RF
PHOT.CPL	:	PHOTO COUPLER
PHOT.INTR	:	PHOTO INTERRUPTER
PHOT.RFLCT	:	PHOTO REFLECTOR
PIN.TEST	:	PIN, TEST POINT
PLST.RIVET	:	PLASTIC RIVET
R.ARRAY	:	RESISTOR ARRAY
R.CAR	:	CARBON RESISTOR
R.CAR.CHP	:	CHIP RESISTOR
R.CAR.FP	:	FLAME PROOF CARBON RESISTOR
R.FUS	:	FUSABLE RESISTOR
R.MTL.CHP	:	CHIP METAL FILM RESISTOR
R.MTL.FLM	:	METAL FILM RESISTOR
R.MTL.OXD	:	METAL OXIDE FILM RESISTOR
R.MTL.PLAT	:	METAL PLATE RESISTOR
RSNR.CE	:	CERAMIC RESONATOR
RSNR.CRYS	:	CRYSTAL RESONATOR
R.TW.CEM	:	TWIN CEMENT FIXED RESISTOR
R.WW	:	WIRE WOUND RESISTOR
SCR.BND.HD	:	BIND HEAD B-TITE SCREW
SCR.BW.HD	:	BW HEAD TAPPING SCREW
SCR.CUP	:	CUP TITE SCREW
SCR.TERM	:	SCREW TERMINAL
SCR.TR	:	SCREW, TRANSISTOR
SUPRT.PCB	:	SUPPORT, P.C.B.
SURG.PRTCT	:	SURGE PROTECTOR
SW.TACT	:	TACT SWITCH
SW.LEAF	:	LEAF SWITCH
SW.LEVER	:	LEVER SWITCH
SW.MICRO	:	MICRO SWITCH
SW.PUSH	:	PUSH SWITCH
SW.RT.ENC	:	ROTARY ENCODER
SW.RT.MTR	:	ROTARY SWITCH WITH MOTOR
SW.RT	:	ROTARY SWITCH
SW.SLIDE	:	SLIDE SWITCH
TERM.SP	:	SPEAKER TERMINAL
TERM.WRAP	:	WRAPPING TERMINAL
THRMST.CHP	:	CHIP THERMISTOR
TR.CHP	:	CHIP TRANSISTOR
TR.DGT	:	DIGITAL TRANSISTOR
TR.DGT.CHP	:	CHIP DIGITAL TRANSISTOR
TRANS	:	TRANSFORMER
TRANS.PULS	:	PULSE TRANSFORMER
TRANS.PWR	:	POWER TRANSFORMER ASS'y
TUNER.AM	:	TUNER PACK, AM
TUNER.FM	:	TUNER PACK, FM
TUNER.PK	:	FRONT-END TUNER PACK
VR	:	ROTARY POTENTIOMETER
VR.MTR	:	POTENTIOMETER WITH MOTOR
VR.SW	:	POTENTIOMETER WITH ROTARY SW
VR.SLIDE	:	SLIDE POTENTIOMETER
VR.TRIM	:	TRIMMER POTENTIOMETER

Note) Those parts marked with "#" are not included in the P.C.B. ass'y.

P.C.B. INPUT

	Schm Ref.	PART NO.	Description			Market
*		V7209500	P.C.B.	INPUT		UCRT
*		V7209600	P.C.B.	INPUT		A
*		V7209700	P.C.B.	INPUT		BG
*		V7209800	P.C.B.	INPUT		L
	CB302	VP082900	CN.BS.PIN	25P		
*	CB303	VQ048600	CN	37P TE		
	CB304	VQ047800	CN.BS.PIN	27P		
	CB305	VM859600	CN.BS.PIN	15P		
	CB306	VP573800	CN.BS.PIN	18P		
	CB307	VM688900	CN.BS.PIN	10P		
	CB308	VK025300	CN.BS.PIN	9P		
	CB309	VQ963500	CN.BS.PIN	14P		
	CB310	VQ962800	CN.BS.PIN	7P		
	CB311	VQ961000	CN.BS.PIN	7P		
	CB312	VQ961700	CN.BS.PIN	14P		
	CB501	Vi878700	CN.BS.PIN	9P		
	C301	UA652100	C.MYLAR	100pF	50V	ABGL
	C302	UA652220	C.MYLAR	220pF	50V	
	C303	UA652100	C.MYLAR	100pF	50V	ABGL
	C304	UA652220	C.MYLAR	220pF	50V	
	C305	US064100	C.CE.M.CHP	0.01uF	50V	
	C306	UT652100	C.PP	100pF	100V	
	C307	UT652100	C.PP	100pF	100V	
	C308	UA652100	C.MYLAR	100pF	50V	
	C309	UA652100	C.MYLAR	100pF	50V	
	C310	FG651470	C.CE	47pF	50V	
	C311	FG651470	C.CE	47pF	50V	
	C312	UA652100	C.MYLAR	100pF	50V	
	C313	UA652100	C.MYLAR	100pF	50V	
	C314	UA652100	C.MYLAR	100pF	50V	
	C315	UA652100	C.MYLAR	100pF	50V	
	C316	US062100	C.CE.M.CHP	100pF	50V	
	C317	US062100	C.CE.M.CHP	100pF	50V	
	C318	US061470	C.CE.M.CHP	47pF	50V	
	C319	US061470	C.CE.M.CHP	47pF	50V	
	C320	US062100	C.CE.M.CHP	100pF	50V	
	C321	US062100	C.CE.M.CHP	100pF	50V	
	C322	US061470	C.CE.M.CHP	47pF	50V	
	C323	US061470	C.CE.M.CHP	47pF	50V	
	C324	UA654100	C.MYLAR	0.01uF	50V	
	C325	US064100	C.CE.M.CHP	0.01uF	50V	
	C326	UR828220	C.EL	220uF	10V	
	C327	UA653910	C.MYLAR	9100pF	50V	
	C328	UA654330	C.MYLAR	0.033uF	50V	
	C329	UA653910	C.MYLAR	9100pF	50V	
	C330	UA654330	C.MYLAR	0.033uF	50V	
	C331	UR828220	C.EL	220uF	10V	
	C332	UR866220	C.EL	2.2uF	50V	
	C333	VG288800	C.EL	47uF	50V	
	C334	UA653100	C.MYLAR	1000pF	50V	
	C335	UA653100	C.MYLAR	1000pF	50V	
	C336	VG288800	C.EL	47uF	50V	
	C337	UR866220	C.EL	2.2uF	50V	

* New Parts

Schm Ref.	PART NO.	Description			Market
C338	UR837100	C.EL	10uF	16V	
C339	UR837100	C.EL	10uF	16V	
C341	VD930900	C.CE.SMI	0.1uF	25V	
C342	VD930900	C.CE.SMI	0.1uF	25V	
C344	UU137100	C.EL	10uF	16V	
C345	VG288800	C.EL	47uF	50V	
C346	VG288800	C.EL	47uF	50V	
C347	UU137100	C.EL	10uF	16V	
C348	VD930900	C.CE.SMI	0.1uF	25V	
C349	VD930900	C.CE.SMI	0.1uF	25V	
C350	UU137100	C.EL	10uF	16V	
C351	UU137100	C.EL	10uF	16V	
C352	VD930900	C.CE.SMI	0.1uF	25V	
C353	VD930900	C.CE.SMI	0.1uF	25V	
C354	UR866220	C.EL	2.2uF	50V	
C359	UR866220	C.EL	2.2uF	50V	
C360	VG290600	C.EL	2.2uF	50V	
C365	UR866220	C.EL	2.2uF	50V	
C368	UA654270	C.MYLAR	0.027uF	50V	
C369	UU147100	C.EL	10uF	25V	
C370	UU147100	C.EL	10uF	25V	
C371	UA654270	C.MYLAR	0.027uF	50V	
C372	UR847100	C.EL	10uF	25V	
C375	UR847100	C.EL	10uF	25V	
C376	UU147100	C.EL	10uF	25V	
C379	UR847100	C.EL	10uF	25V	
C380	UA654270	C.MYLAR	0.027uF	50V	
C381	UT652470	C.PP	470pF	100V	
C382	VG288800	C.EL	47uF	50V	
C383	VG288800	C.EL	47uF	50V	
C384	UT652470	C.PP	470pF	100V	
C385	UA654270	C.MYLAR	0.027uF	50V	
C386	VD930900	C.CE.SMI	0.1uF	25V	
C387	VG288800	C.EL	47uF	50V	
C388	VD930900	C.CE.SMI	0.1uF	25V	
C389	VG288800	C.EL	47uF	50V	
C390	UU147100	C.EL	10uF	25V	
C391	V4578900	C.EL	47uF	35V	
C392	V4578900	C.EL	47uF	35V	
C393	UU147100	C.EL	10uF	25V	
C394	US135100	C.CE.CHP	0.1uF	16V	
C395	US135100	C.CE.CHP	0.1uF	16V	
C396	US135100	C.CE.CHP	0.1uF	16V	
C397	US135100	C.CE.CHP	0.1uF	16V	
C398	US135100	C.CE.CHP	0.1uF	16V	
C399	US135100	C.CE.CHP	0.1uF	16V	
C400	VG287500	C.EL	47uF	50V	
C401	US135100	C.CE.CHP	0.1uF	16V	
C402	US135100	C.CE.CHP	0.1uF	16V	
C403	US135100	C.CE.CHP	0.1uF	16V	
C414	UR837100	C.EL	10uF	16V	
C419	UR837100	C.EL	10uF	16V	
C420	VG287200	C.EL	10uF	50V	

* New Parts

P.C.B. INPUT

Schm Ref.	PART NO.	Description			Market
C423	UR837100	C.EL	10uF	16V	
C424	VG287200	C.EL	10uF	50V	
C425	UR837100	C.EL	10uF	16V	
C428	UU137100	C.EL	10uF	16V	
C429	UU137100	C.EL	10uF	16V	
C430	UR837100	C.EL	10uF	16V	
C431	UA652100	C.MYLAR	100pF	50V	
C432	UA652100	C.MYLAR	100pF	50V	
C433	UR837100	C.EL	10uF	16V	
C437	UA652100	C.MYLAR	100pF	50V	
C439	UR837100	C.EL	10uF	16V	
C443	UU137100	C.EL	10uF	16V	
C444	UU137100	C.EL	10uF	16V	
C446	VN011900	C.EL	100uF	35V	
C447	VN011900	C.EL	100uF	35V	
C449	VG287200	C.EL	10uF	50V	
C450	UR837100	C.EL	10uF	16V	
C452	US062100	C.CE.M.CHP	100pF	50V	
C453	US062100	C.CE.M.CHP	100pF	50V	
C454	US062100	C.CE.M.CHP	100pF	50V	
C455	US062100	C.CE.M.CHP	100pF	50V	
C456	US063100	C.CE.M.CHP	1000pF	50V	
C457	US064100	C.CE.M.CHP	0.01uF	50V	
C458	UR837470	C.EL	47uF	16V	
C459	UR837470	C.EL	47uF	16V	
C460	US062330	C.CE.M.CHP	330pF	50V	BG
C461	US062330	C.CE.M.CHP	330pF	50V	BG
C462	US062560	C.CE.CHP	560pF	50V	BG
C463	UR837470	C.EL	47uF	16V	BG
C464	UR837470	C.EL	47uF	16V	BG
C465	US135100	C.CE.CHP	0.1uF	16V	BG
C466	UR837470	C.EL	47uF	16V	BG
C467	VA761100	C.CE	27pF	50V	BG
C468	VA761100	C.CE	27pF	50V	BG
C473	UT652100	C.PP	100pF	100V	
C474	UT652100	C.PP	100pF	100V	
C475	VG287200	C.EL	10uF	50V	
C476	VG287200	C.EL	10uF	50V	
C477	VG287200	C.EL	10uF	50V	
C478	VG287500	C.EL	47uF	50V	
C479	VG287500	C.EL	47uF	50V	
C501	VG287800	C.EL	330uF	16V	
C502	VG287800	C.EL	330uF	16V	
C503	UR837220	C.EL	22uF	16V	
C504	UR837220	C.EL	22uF	16V	
C505	UR866100	C.EL	1uF	50V	
C506	UR865100	C.EL	0.1uF	50V	
C507	UR865100	C.EL	0.1uF	50V	
C508	UR865100	C.EL	0.1uF	50V	
C509	UR865100	C.EL	0.1uF	50V	
C510	UR866100	C.EL	1uF	50V	
C511	VQ645600	C.MYLAR	100pF	50V	
C512	VQ645600	C.MYLAR	100pF	50V	

*New Parts

	Schm Ref.	PART NO.	Description			Market
	C513	UR837470	C.EL	47uF	16V	
	C514	UT652100	C.PP	100pF	100V	
	C515	UR866220	C.EL	2.2uF	50V	
	C516	UT652100	C.PP	100pF	100V	
	C517	UR866220	C.EL	2.2uF	50V	
	C518	UR837470	C.EL	47uF	16V	
	C519	UR847100	C.EL	10uF	25V	
	C520	UR847100	C.EL	10uF	25V	
	C521	UA655120	C.MYLAR	0.12uF	50V	
	C522	UA654330	C.MYLAR	0.033uF	50V	
	C523	UA654330	C.MYLAR	0.033uF	50V	
	C524	UA655120	C.MYLAR	0.12uF	50V	
	D301	VU172000	DIODE.ZENR	UDZS5.6BTE		
*	D302	VU172500	DIODE.ZENR	UDZS9.1B		
	D303	VU172000	DIODE.ZENR	UDZS5.6BTE		
	D304	VU172000	DIODE.ZENR	UDZS5.6BTE		
	D305	VV220700	DIODE.SHOT	RB501V-40		
	D306	VV220700	DIODE.SHOT	RB501V-40		
	D307	VV220700	DIODE.SHOT	RB501V-40		
	D308	VV220700	DIODE.SHOT	RB501V-40		
	D309	VV220700	DIODE.SHOT	RB501V-40		
	D310	VV220700	DIODE.SHOT	RB501V-40		
	D311	VV220700	DIODE.SHOT	RB501V-40		
	D312	VV220700	DIODE.SHOT	RB501V-40		
	D313	VV220700	DIODE.SHOT	RB501V-40		
	D314	VV220700	DIODE.SHOT	RB501V-40		
	D315	VV220700	DIODE.SHOT	RB501V-40		
	D316	VV220700	DIODE.SHOT	RB501V-40		
	D317	VT332900	DIODE	1SS355		
	D318	VT332900	DIODE	1SS355		
	IC301	XP894A00	IC	LC78211		
	IC302	XP896A00	IC	LC78213		
	IC303	XP894A00	IC	LC78211		
	IC304	XP896A00	IC	LC78213		
	IC305	XW173A00	IC	CS3310-KS		
	IC306	XW173A00	IC	CS3310-KS		
	IC307	XW173A00	IC	CS3310-KS		
	IC308	XY534A00	IC	LC72722		BG
	IC311	XF291A00	IC	uPC4570G2		
	IC312	XF291A00	IC	uPC4570G2		
	IC313	XF291A00	IC	uPC4570G2		
	IC314	XF291A00	IC	uPC4570G2		
	IC315	XF291A00	IC	uPC4570G2		
	IC316	XF291A00	IC	uPC4570G2		
	IC317	XF291A00	IC	uPC4570G2		
	IC319	XF291A00	IC	uPC4570G2		
	IC320	XF291A00	IC	uPC4570G2		
	IC501	XF291A00	IC	uPC4570G2		
	IC502	XF291A00	IC	uPC4570G2		
	L301	VU889500	COIL	220uH		BG
*	PJ301	V5478700	JACK.PIN	RJ-1073F-09-0351A		
*	PJ302	V7046800	JACK.PIN	MSP-246V1-01NI		
*	PJ303	V7046800	JACK.PIN	MSP-246V1-01NI		

*New Parts

P.C.B. INPUT & OPERATION

	Schm Ref.	PART NO.	Description			Market
*	PJ304	V7046700	JACK.PIN	MSP-244V1-01NI		
*	PJ305	V7189700	JACK.PIN	1P		
	Q301	VD303700	TR	2SC3326 A,B		
	Q302	VD303700	TR	2SC3326 A,B		
	Q303	VD303700	TR	2SC3326 A,B		
	Q304	VD303700	TR	2SC3326 A,B		
	Q305	VD303700	TR	2SC3326 A,B		
	Q306	VD303700	TR	2SC3326 A,B		
	Q307	iC1815I0	TR	2SC1815 Y		
	Q308	VD303700	TR	2SC3326 A,B		
	Q309	iC174020	TR	2SC1740S R,S		BG
	Q310	iA103700	TR.CHP	2SA1037 Q,R,S		
	Q311	VP872700	TR	2SC4488 S,T		
	Q312	iA103700	TR.CHP	2SA1037 Q,R,S		
	Q313	VP872600	TR	2SA1708 S,T		
	Q314	VD303700	TR	2SC3326 A,B		
	Q315	VD303700	TR	2SC3326 A,B		
	R350	HV755100	R.CAR.FP	100Ω	1/4W	
	R355	HV755100	R.CAR.FP	100Ω	1/4W	
	R366	HV753220	R.CAR.FP	2.2Ω	1/4W	UCRT
	R366	VP940200	R.MTL.OXD	47Ω	1W	ABGL
	R367	HV753220	R.CAR.FP	2.2Ω	1/4W	UCRT
	R367	VP940200	R.MTL.OXD	47Ω	1W	ABGL
	R401	HV753220	R.CAR.FP	2.2Ω	1/4W	UCRT
	R401	VP940200	R.MTL.OXD	47Ω	1W	ABGL
	R402	HV753220	R.CAR.FP	2.2Ω	1/4W	UCRT
	R402	VP940200	R.MTL.OXD	47Ω	1W	ABGL
	R403	HV753220	R.CAR.FP	2.2Ω	1/4W	UCRT
	R403	VP940200	R.MTL.OXD	47Ω	1W	ABGL
	R404	HV753220	R.CAR.FP	2.2Ω	1/4W	UCRT
	R404	VP940200	R.MTL.OXD	47Ω	1W	ABGL
	R405	HV754100	R.CAR.FP	10Ω	1/4W	
	R448	HV753220	R.CAR.FP	2.2Ω	1/4W	
	R457	VP940200	R.MTL.OXD	47Ω	1W	
	R458	VP940200	R.MTL.OXD	47Ω	1W	
	R501	VP939800	R.MTL.OXD	10Ω	1W	
	R502	VP939800	R.MTL.OXD	10Ω	1W	
	ST302	V4040500	SCR.TERM	M3		
	ST501	V4040500	SCR.TERM	M3		
	SW501	VS066500	SW.PUSH	SPPH13-W		
*	VR501	V7455900	VR	B 20K RK14K1240		
*	VR502	V7456000	VR	W 25K RK14K1240		
	XL301	V3930900	RSNR.CRYS	4.332MHz		BG
*		V7208900	P.C.B.	OPERATION		UC
*		V7209000	P.C.B.	OPERATION		RT
*		V7209100	P.C.B.	OPERATION		AL
*		V7209200	P.C.B.	OPERATION		BG
*	CB501	VU273700	CN	37P TE		
	CB502	Vi878000	CN.BS.PIN	2P		
	CB503	Vi878200	CN.BS.PIN	4P		

* New Parts

	Schm Ref.	PART NO.	Description			Market
	CB504	VP682200	CN.BS.PIN	8P		
	CB505	Vi879000	CN.BS.PIN	12P		
	CB506	Vi878000	CN.BS.PIN	2P		
	CB581	Vi879100	CN.BS.PIN	13P		
	CB583	VP082900	CN.BS.PIN	25P		
	CB681	Vi879100	CN.BS.PIN	13P		
	CB682	Vi878200	CN.BS.PIN	4P		
	CB701	Vi878200	CN.BS.PIN	4P		
	CB702	Vi878100	CN.BS.PIN	3P		
	CB711	Vi878200	CN.BS.PIN	4P		
	CB731	V5478200	CN.PHOT.SN	1P GP1FA551RZ		
	CB732	VP113500	CN.BS.PIN	10P		
	CB733	Vi878200	CN.BS.PIN	4P		
	CB751	Vi878100	CN.BS.PIN	3P		
	CB771	Vi878000	CN.BS.PIN	2P		
	CB781	Vi878000	CN.BS.PIN	2P		
	C501	UR866220	C.EL	2.2uF	50V	
	C502	UR866220	C.EL	2.2uF	50V	
	C503	UR866220	C.EL	2.2uF	50V	
	C504	US061220	C.CE.M.CHP	22pF	50V	
*	C505	US062680	C.CE.M.CHP	680pF	50V	
*	C506	US062680	C.CE.M.CHP	680pF	50V	
*	C507	US062680	C.CE.M.CHP	680pF	50V	
*	C508	US062680	C.CE.M.CHP	680pF	50V	
	C509	US135100	C.CE.CHP	0.1uF	16V	
	C510	US135100	C.CE.CHP	0.1uF	16V	
	C511	UR819100	C.EL	1000uF	6.3V	
	C512	UR837100	C.EL	10uF	16V	
	C513	UR866100	C.EL	1uF	50V	
	C514	UR819100	C.EL	1000uF	6.3V	
	C515	VT740700	C.EL	0.047F	5.5V	
	C516	US135100	C.CE.CHP	0.1uF	16V	
	C517	UR847100	C.EL	10uF	25V	
	C518	UR847470	C.EL	47uF	25V	
	C519	US135100	C.CE.CHP	0.1uF	16V	
	C581	US062100	C.CE.M.CHP	100pF	50V	
	C582	US062100	C.CE.M.CHP	100pF	50V	
	C583	US062100	C.CE.M.CHP	100pF	50V	
	C584	US062100	C.CE.M.CHP	100pF	50V	
	C585	US062100	C.CE.M.CHP	100pF	50V	
	C586	US062100	C.CE.M.CHP	100pF	50V	
	C587	US062220	C.CE.CHP	220pF	50V	
	C588	US062220	C.CE.CHP	220pF	50V	
	C589	US062220	C.CE.CHP	220pF	50V	
	C590	US062220	C.CE.CHP	220pF	50V	
	C591	US062220	C.CE.CHP	220pF	50V	
	C592	US062220	C.CE.CHP	220pF	50V	
	C593	US135100	C.CE.CHP	0.1uF	16V	
	C594	US135100	C.CE.CHP	0.1uF	16V	
	C595	US135100	C.CE.CHP	0.1uF	16V	
	C596	UR829100	C.EL	1000uF	10V	
	C597	US064100	C.CE.M.CHP	0.01uF	50V	
	C598	UR837470	C.EL	47uF	16V	

* New Parts

P.C.B. OPERATION

Schm Ref.	PART NO.	Description			Market
C599	UR837470	C.EL	47uF	16V	
C600	UR837470	C.EL	47uF	16V	
C601	US135100	C.CE.CHP	0.1uF	16V	
C602	US135100	C.CE.CHP	0.1uF	16V	
C603	UR827470	C.EL	47uF	10V	
C604	UR837470	C.EL	47uF	16V	
C605	US062820	C.CE.CHP	820pF	50V	ALBG
C605	US063150	C.CE.M.CHP	1500pF	50V	UCRT
C606	US062270	C.CE.M.CHP	270pF	50V	ALBG
C606	US062390	C.CE.CHP	390P	50V	UCRT
C607	UR827470	C.EL	47uF	10V	
C608	UR827470	C.EL	47uF	10V	
C609	UR827470	C.EL	47uF	10V	
C610	UR827470	C.EL	47uF	10V	
C611	US135100	C.CE.CHP	0.1uF	16V	
C612	US135100	C.CE.CHP	0.1uF	16V	
C613	US135100	C.CE.CHP	0.1uF	16V	
C614	UR847100	C.EL	10uF	25V	
C615	UR866470	C.EL	4.7uF	50V	
C616	UR866100	C.EL	1uF	50V	
C617	US135100	C.CE.CHP	0.1uF	16V	
C618	US135100	C.CE.CHP	0.1uF	16V	
C619	US060800	C.CE.CHP	8pF	50V	
C620	UR827470	C.EL	47uF	10V	
C621	UR827470	C.EL	47uF	10V	
C622	US060700	C.CE.CHP	7pF	50V	
C623	US061330	C.CE.M.CHP	33pF	50V	
C624	US064100	C.CE.M.CHP	0.01uF	50V	
C625	UR827470	C.EL	47uF	10V	
C626	UR866470	C.EL	4.7uF	50V	
C627	US135100	C.CE.CHP	0.1uF	16V	
C628	US063120	C.CE.M.CHP	1200pF	50V	
C629	US062470	C.CE.M.CHP	470pF	50V	
C630	UR866100	C.EL	1uF	50V	
C631	US061240	C.CE.CHP	24pF	50V	
C632	US061240	C.CE.CHP	24pF	50V	
C633	US062220	C.CE.CHP	220pF	50V	
C634	UR847100	C.EL	10uF	25V	
C635	US062120	C.CE.CHP	120pF	50V	
C636	US135100	C.CE.CHP	0.1uF	16V	
C637	UR827470	C.EL	47uF	10V	
C638	US135100	C.CE.CHP	0.1uF	16V	
C639	US062100	C.CE.M.CHP	100pF	50V	
C640	VF467000	C.CE.TUBLR	1000pF	50V	
C681	US062100	C.CE.M.CHP	100pF	50V	
C682	US062100	C.CE.M.CHP	100pF	50V	
C683	US062100	C.CE.M.CHP	100pF	50V	
C686	UR827470	C.EL	47uF	10V	
C687	UR827470	C.EL	47uF	10V	
C688	US135100	C.CE.CHP	0.1uF	16V	
C689	UR827470	C.EL	47uF	10V	
C690	UR827470	C.EL	47uF	10V	
C691	US135100	C.CE.CHP	0.1uF	16V	

*New Parts

Schm Ref.	PART NO.	Description			Market
C692	UR827470	C.EL	47uF	10V	
C693	UR827470	C.EL	47uF	10V	
C694	US135220	C.CE.CHP	0.22uF	16V	
C711	US062100	C.CE.M.CHP	100pF	50V	
C712	US062100	C.CE.M.CHP	100pF	50V	
C713	US062100	C.CE.M.CHP	100pF	50V	
C714	US135100	C.CE.CHP	0.1uF	16V	
C715	UR847100	C.EL	10uF	25V	
C716	US135100	C.CE.CHP	0.1uF	16V	
C717	UR847100	C.EL	10uF	25V	
C732	US135220	C.CE.CHP	0.22uF	16V	
C733	US135100	C.CE.CHP	0.1uF	16V	
C734	US135100	C.CE.CHP	0.1uF	16V	
C735	US062100	C.CE.M.CHP	100pF	50V	
C736	US062100	C.CE.M.CHP	100pF	50V	
C737	US064100	C.CE.M.CHP	0.01uF	50V	RTALBG
C738	US064100	C.CE.M.CHP	0.01uF	50V	RTALBG
C739	US064100	C.CE.M.CHP	0.01uF	50V	RTALBG
C740	US063100	C.CE.M.CHP	1000pF	50V	
C741	US064100	C.CE.M.CHP	0.01uF	50V	ALBG
C742	US064100	C.CE.M.CHP	0.01uF	50V	ALBG
C743	US135220	C.CE.CHP	0.22uF	16V	
D501	VT332900	DIODE	1SS355		
D502	VV220700	DIODE.SHOT	RB501V-40		
D503	VT332900	DIODE	1SS355		
D504	VT332900	DIODE	1SS355		
D505	VT332900	DIODE	1SS355		
D506	VT332900	DIODE	1SS355		
D507	VU171900	DIODE.ZENR	UDZ5.1B		
D508	VU171900	DIODE.ZENR	UDZ5.1B		
D509	VU172300	DIODE.ZENR	UDZ7.5B		
D510	VT332900	DIODE	1SS355		
D511	VT332900	DIODE	1SS355		
D512	VU172100	DIODE.ZENR	UDZS6.2B		
D512	VU172100	DIODE.ZENR	UDZS6.2B		RT
D512	VU172200	DIODE.ZENR	UDZ6.8B		UCALBG
D512	VU172200	DIODE.ZENR	UDZ6.8B		
D581	VT332900	DIODE	1SS355		
D582	VT332900	DIODE	1SS355		
D583	VT332900	DIODE	1SS355		
D584	VT332900	DIODE	1SS355		
D585	VT332900	DIODE	1SS355		
D586	VT332900	DIODE	1SS355		
D587	VT332900	DIODE	1SS355		
D588	VT332900	DIODE	1SS355		
D589	VT332900	DIODE	1SS355		
D590	VT332900	DIODE	1SS355		
D731	VU172500	DIODE.ZENR	UDZS9.1B		
D732	VT332900	DIODE	1SS355		
D733	VT332900	DIODE	1SS355		
* G731	V6865600	PLATE.GND			
* IC501	XZ619A00	IC	uPD784217AGF-517		
* IC502	XZ615A00	IC	LC75725E		

*New Parts

P.C.B. OPERATION & DSP

	Schm Ref.	PART NO.	Description		Market
	IC503	XJ757A00	IC	NJM78L05A-T3	
	IC581	XW939A00	IC	TK15420M VIDEO AMP	
*	IC582	XY549A00	IC	TC74HC4051AFEL	
*	IC583	XY549A00	IC	TC74HC4051AFEL	
	IC584	iR405300	IC	TC74HC4053AP	
	IC585	iG142200	IC	TC74HCU04AP	
*	IC586	XZ736A00	IC	TC74HC164AF-EL	
	IC587	XZ060A00	IC	LC74781-9798	
	IC588	XY443A00	IC	LA7109 6CH	
	IC681	XW911A00	IC	LA7108M VIDEO AMP	
*	IC682	XY549A00	IC	TC74HC4051AFEL	
	IC711	XZ177A00	IC	LA7104M VIDEO AMP	
	IC712	iR405300	IC	TC74HC4053AP	
*	JK581	V5268700	JACK.DIN	JY-5036	
*	JK582	V5268700	JACK.DIN	JY-5036	
*	JK583	V5268700	JACK.DIN	JY-5036	
	JK584	VQ960400	CN.DIN	1P	
	JK731	V2589500	CN	1P	
	JK732	V6268100	JACK.PHONE	YKB21-XXXX	
	L581	V3233700	COIL	1.5uH	
	L582	V6236000	COIL	4.7uH LAV35VB4R7K	
	L583	V2726100	COIL	33uH	
	L731	V2726500	COIL	68uH	
*	PJ581	V7190400	JACK.PIN	6P	
*	PJ681	V7189800	JACK.PIN	1P	
*	PJ682	V7190000	JACK.PIN	2P	
*	PJ683	V7190000	JACK.PIN	2P	
*	PJ684	V7190000	JACK.PIN	2P	
*	PJ711	V7122000	JACK.PIN	YKC21-2960	
*	PJ731	V7190100	JACK.PIN	3P	
	PN501	V3750200	PIN	L=70	
	PN711	V3750200	PIN	L=70	
	Q501	VV900500	TR	2SD1991A Q,R,S	
	Q502	VV900500	TR	2SD1991A Q,R,S	
	Q503	VV900500	TR	2SD1991A Q,R,S	
	Q504	iA093320	TR	2SA933S Q,R	
	Q505	iA093320	TR	2SA933S Q,R	
	Q506	iA093320	TR	2SA933S Q,R	
	Q507	VV900500	TR	2SD1991A Q,R,S	
	Q508	VV900500	TR	2SD1991A Q,R,S	
	Q509	VV900500	TR	2SD1991A Q,R,S	
	Q510	VG722000	TR.DGT	DTC144ES	
	Q511	iA093320	TR	2SA933S Q,R	
	Q581	iC174020	TR	2SC1740S R,S	
	Q582	iC287820	TR	2SC2878 A,B	
	Q583	VD678700	TR.DGT	DTC114ES	
	Q584	iC174020	TR	2SC1740S R,S	
	Q585	iC287820	TR	2SC2878 A,B	
	Q586	iC053540	TR	2SC535 A,B,C	
	Q587	iC174020	TR	2SC1740S R,S	
	Q588	iA1015I0	TR	2SA1015 Y	
	Q589	iC224030	TR	2SC2240 GR,BL	
	SW501	V6322700	SW.RT.ENC	REB161(9X7)PVB	

* New Parts

	Schm Ref.	PART NO.	Description		Market
	SW502	V4586200	SW.RT.ENC	REB161PVB20F	
	SW503	VG392900	SW.TACT	SKHVAA	BG
	SW504	VG392900	SW.TACT	SKHVAA	BG
	SW505	VG392900	SW.TACT	SKHVAA	BG
	SW506	VG392900	SW.TACT	SKHVAA	BG
	SW581	V3624300	SW.SLIDE	SS029-P022MJB-PA6	RT
	SW701	VG392900	SW.TACT	SKHVAA	
	SW702	VG392900	SW.TACT	SKHVAA	
	SW703	VG392900	SW.TACT	SKHVAA	
	SW704	VG392900	SW.TACT	SKHVAA	
	SW705	VG392900	SW.TACT	SKHVAA	
	SW706	VG392900	SW.TACT	SKHVAA	
	SW751	VG392900	SW.TACT	SKHVAA	
	SW752	VG392900	SW.TACT	SKHVAA	
	SW753	VG392900	SW.TACT	SKHVAA	
	SW754	VG392900	SW.TACT	SKHVAA	
	SW771	VG392900	SW.TACT	SKHVAA	
	U501	VU591000	L.DTCT	GP1U271X	
*	V501	V6785800	FL.DSPLY	10-BT-236GNK	
	XL501	V4610100	RSNR.CE	10MHz	
	XL581	VV949800	RSNR.CRYS	14.31818MHz	UCRT
	XL581	VV949900	RSNR.CRYS	17.734475MHz	ALBG
*		V6880300	SHEET		
		V6007100	SPACER.FL	4.6/10/32	
*		V7209900	P.C.B.	DSP	
	CB801	V6022800	CN.FBRLINK	1P GP1FA551TZ	
	CB802	V5478200	CN.PHOT.SN	1P GP1FA551RZ	
	CB803	V5478200	CN.PHOT.SN	1P GP1FA551RZ	
	CB804	V5478200	CN.PHOT.SN	1P GP1FA551RZ	
	CB807	VQ045600	CN.BS.PIN	27P	
	C801	US135100	C.CE.CHP	0.1uF 16V	
	C802	US135100	C.CE.CHP	0.1uF 16V	
	C803	US135100	C.CE.CHP	0.1uF 16V	
	C804	US135100	C.CE.CHP	0.1uF 16V	
	C806	US061220	C.CE.M.CHP	22pF 50V	
	C807	US135100	C.CE.CHP	0.1uF 16V	
	C808	UR847100	C.EL	10uF 25V	
	C809	US135100	C.CE.CHP	0.1uF 16V	
	C810	US135100	C.CE.CHP	0.1uF 16V	
	C811	UR847220	C.EL	22uF 25V	
	C812	US135100	C.CE.CHP	0.1uF 16V	
	C813	US044220	C.CE.M.CHP	0.022uF 25V	
	C814	US061330	C.CE.M.CHP	33pF 50V	
	C815	US063100	C.CE.M.CHP	1000pF 50V	
	C816	US062220	C.CE.CHP	220pF 50V	
	C817	US061100	C.CE.M.CHP	10pF 50V	
	C818	US063100	C.CE.M.CHP	1000pF 50V	
	C819	US135100	C.CE.CHP	0.1uF 16V	
	C820	UR819100	C.EL	1000uF 6.3V	
	C821	UR819100	C.EL	1000uF 6.3V	

* New Parts

P.C.B. DSP

Schm Ref.	PART NO.	Description			Market
C822	US135100	C.CE.CHP	0.1uF	16V	
C823	US135100	C.CE.CHP	0.1uF	16V	
C824	US135100	C.CE.CHP	0.1uF	16V	
C825	US061100	C.CE.M.CHP	10pF	50V	
C826	US135100	C.CE.CHP	0.1uF	16V	
C827	US135100	C.CE.CHP	0.1uF	16V	
C828	US135100	C.CE.CHP	0.1uF	16V	
C829	US135100	C.CE.CHP	0.1uF	16V	
C830	UR819100	C.EL	1000uF	6.3V	
C831	UR818100	C.EL	100uF	6.3V	
C832	US135100	C.CE.CHP	0.1uF	16V	
C833	UR819100	C.EL	1000uF	6.3V	
C834	UR818100	C.EL	100uF	6.3V	
C835	US135100	C.CE.CHP	0.1uF	16V	
C836	US135100	C.CE.CHP	0.1uF	16V	
C837	US135100	C.CE.CHP	0.1uF	16V	
C838	US061330	C.CE.M.CHP	33pF	50V	
C839	US135100	C.CE.CHP	0.1uF	16V	
C840	UR819100	C.EL	1000uF	6.3V	
C841	US135100	C.CE.CHP	0.1uF	16V	
C842	UR819100	C.EL	1000uF	6.3V	
C843	US061330	C.CE.M.CHP	33pF	50V	
C844	US135100	C.CE.CHP	0.1uF	16V	
C845	US061470	C.CE.M.CHP	47pF	50V	
C846	US061470	C.CE.M.CHP	47pF	50V	
C847	US061470	C.CE.M.CHP	47pF	50V	
C848	US061470	C.CE.M.CHP	47pF	50V	
C849	US061470	C.CE.M.CHP	47pF	50V	
C850	US061470	C.CE.M.CHP	47pF	50V	
C851	US061470	C.CE.M.CHP	47pF	50V	
C852	US061470	C.CE.M.CHP	47pF	50V	
C853	US061470	C.CE.M.CHP	47pF	50V	
C854	US061470	C.CE.M.CHP	47pF	50V	
C855	UR818100	C.EL	100uF	6.3V	
C856	US135100	C.CE.CHP	0.1uF	16V	
C857	US135100	C.CE.CHP	0.1uF	16V	
C858	US063470	C.CE.CHP	4700pF	50V	
C859	US135100	C.CE.CHP	0.1uF	16V	
C860	US062470	C.CE.M.CHP	470pF	50V	
C861	UR818100	C.EL	100uF	6.3V	
C862	US063470	C.CE.CHP	4700pF	50V	
C863	US135100	C.CE.CHP	0.1uF	16V	
C864	US135100	C.CE.CHP	0.1uF	16V	
C865	UR818100	C.EL	100uF	6.3V	
C866	US135100	C.CE.CHP	0.1uF	16V	
C867	US135100	C.CE.CHP	0.1uF	16V	
C868	US135100	C.CE.CHP	0.1uF	16V	
C869	US135100	C.CE.CHP	0.1uF	16V	
C870	US061470	C.CE.M.CHP	47pF	50V	
C871	US061470	C.CE.M.CHP	47pF	50V	
C872	US061470	C.CE.M.CHP	47pF	50V	
C873	US061470	C.CE.M.CHP	47pF	50V	
C874	US061470	C.CE.M.CHP	47pF	50V	

*New Parts

Schm Ref.	PART NO.	Description			Market
C875	US061470	C.CE.M.CHP	47pF	50V	
C876	US061470	C.CE.M.CHP	47pF	50V	
C877	US061470	C.CE.M.CHP	47pF	50V	
C878	US061470	C.CE.M.CHP	47pF	50V	
C879	US135100	C.CE.CHP	0.1uF	16V	
C880	UR819100	C.EL	1000uF	6.3V	
C881	US135100	C.CE.CHP	0.1uF	16V	
C882	US135100	C.CE.CHP	0.1uF	16V	
C883	US135100	C.CE.CHP	0.1uF	16V	
C884	US135100	C.CE.CHP	0.1uF	16V	
C885	US135100	C.CE.CHP	0.1uF	16V	
C886	UU118100	C.EL	100uF	6.3V	
C887	UU118100	C.EL	100uF	6.3V	
C888	UU147100	C.EL	10uF	25V	
C889	US135100	C.CE.CHP	0.1uF	16V	
C890	US135100	C.CE.CHP	0.1uF	16V	
C891	UU166220	C.EL	2.2uF	50V	
C892	UU147100	C.EL	10uF	25V	
C893	UU147100	C.EL	10uF	25V	
C894	US135100	C.CE.CHP	0.1uF	16V	
C895	UA652560	C.MYLAR	560pF	50V	
C896	UA652220	C.MYLAR	220pF	50V	
C897	UA652220	C.MYLAR	220pF	50V	
C898	UU147100	C.EL	10uF	25V	
C899	UA652560	C.MYLAR	560pF	50V	
C900	UU147100	C.EL	10uF	25V	
C901	UU128100	C.EL	100uF	10V	
C902	UA653150	C.MYLAR	1500pF	50V	
C903	UA653150	C.MYLAR	1500pF	50V	
C904	UU147100	C.EL	10uF	25V	
C905	US135100	C.CE.CHP	0.1uF	16V	
C906	US135100	C.CE.CHP	0.1uF	16V	
C907	UU147100	C.EL	10uF	25V	
C908	UU147100	C.EL	10uF	25V	
C909	US135100	C.CE.CHP	0.1uF	16V	
C910	US135100	C.CE.CHP	0.1uF	16V	
C911	UU147100	C.EL	10uF	25V	
C912	UU147100	C.EL	10uF	25V	
C913	US135100	C.CE.CHP	0.1uF	16V	
C914	US135100	C.CE.CHP	0.1uF	16V	
C915	UU147100	C.EL	10uF	25V	
C916	UA652220	C.MYLAR	220pF	50V	
C917	UU147100	C.EL	10uF	25V	
C918	US135100	C.CE.CHP	0.1uF	16V	
C919	UU147100	C.EL	10uF	25V	
C920	UA652220	C.MYLAR	220pF	50V	
C921	UA652100	C.MYLAR	100pF	50V	
C922	UA652100	C.MYLAR	100pF	50V	
C923	UU147100	C.EL	10uF	25V	
C924	US063470	C.CE.CHP	4700pF	50V	
C925	UU147100	C.EL	10uF	25V	
C926	UU147100	C.EL	10uF	25V	
C927	UU147100	C.EL	10uF	25V	

*New Parts

P.C.B. DSP

Schm Ref.	PART NO.	Description			Market
C928	UU147100	C.EL	10uF	25V	
C929	UU147100	C.EL	10uF	25V	
C930	UU137470	C.EL	47uF	16V	
C931	UU137470	C.EL	47uF	16V	
C932	UA652100	C.MYLAR	100pF	50V	
C933	UU137220	C.EL	22uF	16V	
C934	UU147100	C.EL	10uF	25V	
C935	US135100	C.CE.CHP	0.1uF	16V	
C936	UU137220	C.EL	22uF	16V	
C937	UA652100	C.MYLAR	100pF	50V	
C938	UU147100	C.EL	10uF	25V	
C939	UA652100	C.MYLAR	100pF	50V	
C940	UA652100	C.MYLAR	100pF	50V	
C941	UU147100	C.EL	10uF	25V	
C942	UU147100	C.EL	10uF	25V	
C943	UU137470	C.EL	47uF	16V	
C944	UA652100	C.MYLAR	100pF	50V	
C945	UA652100	C.MYLAR	100pF	50V	
C946	UU137470	C.EL	47uF	16V	
C947	UU147100	C.EL	10uF	25V	
C948	UU147100	C.EL	10uF	25V	
C949	UA652100	C.MYLAR	100pF	50V	
C950	UA652100	C.MYLAR	100pF	50V	
C951	UU147100	C.EL	10uF	25V	
C952	US135100	C.CE.CHP	0.1uF	16V	
C953	US135100	C.CE.CHP	0.1uF	16V	
C954	US135100	C.CE.CHP	0.1uF	16V	
C955	US135100	C.CE.CHP	0.1uF	16V	
C960	US062100	C.CE.M.CHP	100pF	50V	
C961	VJ599100	C.CE.TUBLR	0.1uF	50V	
C962	VJ599100	C.CE.TUBLR	0.1uF	50V	
C963	VJ599100	C.CE.TUBLR	0.1uF	50V	
C964	VJ599100	C.CE.TUBLR	0.1uF	50V	
C965	VJ599100	C.CE.TUBLR	0.1uF	50V	
C966	VJ599100	C.CE.TUBLR	0.1uF	50V	
D801	VT332900	DIODE	1SS355		
D802	VT332900	DIODE	1SS355		
D803	VT332900	DIODE	1SS355		
D804	VV220700	DIODE.SHOT	RB501V-40		
D805	VV220700	DIODE.SHOT	RB501V-40		
D806	VT332900	DIODE	1SS355		
D807	VT332900	DIODE	1SS355		
D808	VT332900	DIODE	1SS355		
D809	VT332900	DIODE	1SS355		
D810	VT332900	DIODE	1SS355		
D811	VT332900	DIODE	1SS355		
D812	VT332900	DIODE	1SS355		
D813	VT332900	DIODE	1SS355		
D814	VT332900	DIODE	1SS355		
D815	VT332900	DIODE	1SS355		
D816	VT332900	DIODE	1SS355		
D817	VT332900	DIODE	1SS355		
D818	VT332900	DIODE	1SS355		

* New Parts

	Schm Ref.	PART NO.	Description		Market
	D819	VT332900	DIODE	1SS355	
	D820	VT332900	DIODE	1SS355	
	D821	VT332900	DIODE	1SS355	
	D822	VT332900	DIODE	1SS355	
	D823	VV220700	DIODE.SHOT	RB501V-40	
	D824	VV220700	DIODE.SHOT	RB501V-40	
	D825	VV220700	DIODE.SHOT	RB501V-40	
	D826	VV220700	DIODE.SHOT	RB501V-40	
	D827	VV220700	DIODE.SHOT	RB501V-40	
	D828	VV220700	DIODE.SHOT	RB501V-40	
	D829	VV220700	DIODE.SHOT	RB501V-40	
	D830	VV220700	DIODE.SHOT	RB501V-40	
	D832	VT332900	DIODE	1SS355	
	G801	VR463400	TERM.GND	D3.5	
	G802	VR463400	TERM.GND	D3.5	
	G803	VR463400	TERM.GND	D3.5	
	G804	VR463400	TERM.GND	D3.5	
	IC801	XY580A00	IC	YSS928	
	IC802	XV077A00	IC	MSM514260C-60JS	
	IC803	XZ003A00	IC	PQ025EZ5MZP 2.5V	
	IC804	XU965A00	IC	uPC29M33T-E1 3.3V	
	IC805	XD655A00	IC	TC74HC00AF NAND	
	IC806	XV495A00	IC	TC74VHCT08AF AND	
	IC807	XR038A00	IC	NJM2904M OP AMP	
	IC808	XD660A00	IC	TC74HCU04AF-TP1	
	IC811	XF291A00	IC	uPC4570G2	
	IC812	XZ002A00	IC	AK4527VQ	
	IC813	XF291A00	IC	uPC4570G2	
	IC814	XF291A00	IC	uPC4570G2	
	IC815	XF291A00	IC	uPC4570G2	
	IC816	XF291A00	IC	uPC4570G2	
	IC817	XF291A00	IC	uPC4570G2	
*	IC818	XZ677A00	IC	AK4382-VT-E2	
	L801	V2726500	COIL	68uH	
	L802	V2726500	COIL	68uH	
	L803	V2726500	COIL	68uH	
*	PJ801	V4483900	JACK.PIN	YKC21-3895	
	Q801	VC124000	TR.DGT	DTA144EK	
	Q802	VC124000	TR.DGT	DTA144EK	
	Q803	VC124000	TR.DGT	DTA144EK	
	Q804	VC124000	TR.DGT	DTA144EK	
	Q805	VC124000	TR.DGT	DTA144EK	
	Q806	VC124000	TR.DGT	DTA144EK	
	Q807	VC124000	TR.DGT	DTA144EK	
	Q808	VC124000	TR.DGT	DTA144EK	
	Q809	VD303700	TR	2SC3326 A,B	
	Q810	VD303700	TR	2SC3326 A,B	
	Q811	VD303700	TR	2SC3326 A,B	
	Q812	VD303700	TR	2SC3326 A,B	
	Q813	VD303700	TR	2SC3326 A,B	
	Q814	VD303700	TR	2SC3326 A,B	
	Q815	VD303700	TR	2SC3326 A,B	
	Q816	VD303700	TR	2SC3326 A,B	

* New Parts

P.C.B. DSP & MAIN

	Schm Ref.	PART NO.	Description			Market
	Q817	VD303700	TR	2SC3326 A,B		
	Q818	VD303700	TR	2SC3326 A,B		
	R842	HV753100	R.CAR.FP	1Ω	1/4W	
	R843	HV753100	R.CAR.FP	1Ω	1/4W	
	R844	VU224000	R.MTL.FLM	0.22Ω	1W J	
	R845	HV753220	R.CAR.FP	2.2Ω	1/4W	
	R846	VU224000	R.MTL.FLM	0.22Ω	1W J	
	R847	HV753220	R.CAR.FP	2.2Ω	1/4W	
	R849	HV754100	R.CAR.FP	10Ω	1/4W	
	XL801	V3625700	RSNR.CRYS	24.576MHz		
*		V7210700	P.C.B.	MAIN		U
*		V7210800	P.C.B.	MAIN		C
*		V7210900	P.C.B.	MAIN		RTA
*		V7211000	P.C.B.	MAIN		BG
*		V7211100	P.C.B.	MAIN		L
	CB101	VQ963500	CN.BS.PIN	14P		
	CB102	VK024800	CN.BS.PIN	4P		
	CB104	VK025600	CN.BS.PIN	12P		
	CB105	Vi878700	CN.BS.PIN	9P		
	CB106	Vi878900	CN.BS.PIN	11P		BG
	CB251	VQ044800	CN.BS.PIN	18P		
	CB252	VQ961000	CN.BS.PIN	7P		
	CB253	VQ961700	CN.BS.PIN	14P		
*	CB332	VR428800	CN.BS.PIN	3P		
*	CB351	VR428800	CN.BS.PIN	3P		
	CB371	Vi878700	CN.BS.PIN	9P		
	CB372	VQ962700	CN.BS.PIN	6P		
	CB373	VQ585200	CN.BS.PIN	10P		
	CB374	VQ585200	CN.BS.PIN	10P		
	CB381	VK027000	CN.BS.PIN	11P		BG
	CB381	VK027000	CN.BS.PIN	11P		
	C101	V2290000	C.EL	22uF	63V	
	C102	VG291200	C.EL	47uF	50V	
	C103	VG291200	C.EL	47uF	50V	
	C104	VG291200	C.EL	47uF	50V	
	C105	VG291200	C.EL	47uF	50V	
	C106	VG291200	C.EL	47uF	50V	
	C107	Vi377400	C.EL	4.7uF	63V	
	C108	VR325000	C.MYLAR	100pF	100V	
	C109	VG288800	C.EL	47uF	25V	
	C110	VR325000	C.MYLAR	100pF	100V	
	C111	VR325000	C.MYLAR	100pF	100V	
	C112	VG288800	C.EL	47uF	25V	
	C113	VR325000	C.MYLAR	100pF	100V	
	C114	VR325000	C.MYLAR	100pF	100V	
	C115	VG287500	C.EL	47uF	50V	
	C116	VR325000	C.MYLAR	100pF	100V	
	C117	VR325000	C.MYLAR	100pF	100V	
	C118	VG287500	C.EL	47uF	50V	
	C119	VR325000	C.MYLAR	100pF	100V	

*New Parts

	Schm Ref.	PART NO.	Description			Market
	C120	VR325000	C.MYLAR	100pF	100V	
	C121	UU137470	C.EL	47uF	16V	
	C122	VR325000	C.MYLAR	100pF	100V	
	C123	UA654680	C.MYLAR	0.068uF	50V	
	C124	UA654680	C.MYLAR	0.068uF	50V	
	C125	UA654680	C.MYLAR	0.068uF	50V	
	C126	UA654680	C.MYLAR	0.068uF	50V	
	C127	UA654680	C.MYLAR	0.068uF	50V	
	C128	UR866470	C.EL	4.7uF	50V	
	C129	VT898000	C.MYLAR	0.1uF	100V	
	C130	VT898000	C.MYLAR	0.1uF	100V	
*	C131	VK534000	C.PP	220pF	200V	
	C132	UR866470	C.EL	4.7uF	50V	
	C133	UR866470	C.EL	4.7uF	50V	
	C134	VG287500	C.EL	47uF	50V	
	C135	UR818100	C.EL	100uF	6.3V	
	C136	UA654100	C.MYLAR	0.01uF	50V	RTABGL
	C137	UA654100	C.MYLAR	0.01uF	50V	RTABGL
	C138	UA654100	C.MYLAR	0.01uF	50V	RTABGL
	C139	UA654220	C.MYLAR	0.022uF	50V	RTABGL
	C140	UA654100	C.MYLAR	0.01uF	50V	RTABGL
	C141	UA654100	C.MYLAR	0.01uF	50V	RTABGL
	C142	UA654220	C.MYLAR	0.022uF	50V	RTABGL
	C143	VK399200	C.MYLAR	0.39uF	50V	
	C144	VK399200	C.MYLAR	0.39uF	50V	
	C145	UA654100	C.MYLAR	0.01uF	50V	RTABGL
	C146	UA654100	C.MYLAR	0.01uF	50V	RTABGL
*	C251	VP917800	C.PP	1000pF	100V	
	C252	V2290000	C.EL	22uF	63V	
	C253	VQ462600	C.MYLAR	220pF	50V	
	C253	VQ462600	C.MYLAR	220pF	50V	RTABGL
	C253	VR325000	C.MYLAR	100pF	100V	UC
	C254	UU137100	C.EL	10uF	16V	
	C255	VQ462600	C.MYLAR	220pF	50V	
	C256	VQ462600	C.MYLAR	220pF	50V	RTABGL
	C256	VR325000	C.MYLAR	100pF	100V	UC
	C257	UU137100	C.EL	10uF	16V	
	C258	VQ462600	C.MYLAR	220pF	50V	
	C259	UA652100	C.MYLAR	100pF	50V	UC
	C259	UA652220	C.MYLAR	220pF	50V	RTABGL
	C260	Vi578700	C.EL	10uF	50V	
	C261	UA652220	C.MYLAR	220pF	50V	
	C262	UA652100	C.MYLAR	100pF	50V	UC
	C262	UA652220	C.MYLAR	220pF	50V	RTABGL
	C263	Vi578700	C.EL	10uF	50V	
	C264	UA652220	C.MYLAR	220pF	50V	
	C265	VQ462600	C.MYLAR	220pF	50V	RTABGL
	C265	VR325000	C.MYLAR	100pF	100V	UC
	C266	UU137100	C.EL	10uF	16V	
	C267	UA652220	C.MYLAR	220pF	50V	
	C268	UU138100	C.EL	100uF	16V	
	C269	V2290000	C.EL	22uF	63V	
	C270	UA653100	C.MYLAR	1000pF	50V	

*New Parts

P.C.B. MAIN

	Schm Ref.	PART NO.	Description			Market
	C271	VQ245400	C.PP	33pF	200V	
	C272	VG291300	C.EL	100uF	50V	
	C273	UA653100	C.MYLAR	1000pF	50V	
	C274	VQ245400	C.PP	33pF	200V	
	C275	VG291300	C.EL	100uF	50V	
	C276	UA653100	C.MYLAR	1000pF	50V	
	C277	VS696700	C.CE	33pF	500V	
	C278	V4578900	C.EL	47uF	35V	
	C279	UA653100	C.MYLAR	1000pF	50V	
	C280	VS696700	C.CE	33pF	500V	
	C281	V4578900	C.EL	47uF	35V	
	C282	UA653100	C.MYLAR	1000pF	50V	
	C283	VQ245400	C.PP	33pF	200V	
	C284	VG291200	C.EL	47uF	50V	
	C331	UA654330	C.MYLAR	0.033uF	50V	RTABGL
	C332	UA653470	C.MYLAR	4700pF	50V	RTABGL
	C333	UA653470	C.MYLAR	4700pF	50V	RTABGL
	C334	VI716300	C.MYLAR	4700pF	50V	RTABGL
	C335	VI716300	C.MYLAR	4700pF	50V	RTABGL
	C336	UA654330	C.MYLAR	0.033uF	50V	RTABGL
	C339	VI716700	C.MYLAR	0.01uF	50V	RTABGL
	C340	VI716700	C.MYLAR	0.01uF	50V	
	C340	UA654100	C.MYLAR	0.01uF	50V	RTABGL
	C341	UA654220	C.MYLAR	0.022uF	50V	RTABGL
	C342	UA654220	C.MYLAR	0.022uF	50V	RTABGL
	C343	UA654220	C.MYLAR	0.022uF	50V	RTABGL
	C344	UA654220	C.MYLAR	0.022uF	50V	RTABGL
⚠	C371	V2922200	C.EL	12000uF	63V	
⚠	C372	V2922200	C.EL	12000uF	63V	
	C373	VK534100	C.MYLAR	0.01uF	100V	
	C374	VT898000	C.MYLAR	0.1uF	100V	
	C375	VG291300	C.EL	100uF	50V	
	C376	VG291300	C.EL	100uF	50V	
	C377	VT898000	C.MYLAR	0.1uF	100V	
	C378	UA655100	C.MYLAR	0.1uF	50V	
	C379	UA655100	C.MYLAR	0.1uF	50V	
	C381	VF466900	C.CE.TUBLR	470pF	50V	BG
	C382	VF466900	C.CE.TUBLR	470pF	50V	BG
	C383	VF466900	C.CE.TUBLR	470pF	50V	BG
	C384	VF466900	C.CE.TUBLR	470pF	50V	BG
	C385	VF466900	C.CE.TUBLR	470pF	50V	BG
	C386	VF466900	C.CE.TUBLR	470pF	50V	BG
	D101	VN008700	DIODE	1SS270A		
	D102	VN008700	DIODE	1SS270A		
	D103	VN008700	DIODE	1SS270A		
	D104	VN008700	DIODE	1SS270A		
	D105	VN008700	DIODE	1SS270A		
	D106	VD631600	DIODE	1SS133,176		
	D107	VD631600	DIODE	1SS133,176		
	D108	VN008700	DIODE	1SS270A		
	D109	VN008700	DIODE	1SS270A		
	D110	VN008700	DIODE	1SS270A		
	D111	VN008700	DIODE	1SS270A		

* New Parts

	Schm Ref.	PART NO.	Description			Market
	D112	VN008700	DIODE	1SS270A		
	D113	VD631600	DIODE	1SS133,176		
	D114	VD631600	DIODE	1SS133,176		
	D115	VG440300	DIODE.ZENR	MTZJ12C	12V	
	D116	VG440300	DIODE.ZENR	MTZJ12C	12V	
	D117	VG443200	DIODE.ZENR	MTZ J 30.0A	30.0V	
	D118	VG440300	DIODE.ZENR	MTZJ12C	12V	
	D119	VG440300	DIODE.ZENR	MTZJ12C	12V	
	D120	VG440300	DIODE.ZENR	MTZJ12C	12V	
	D121	VN008700	DIODE	1SS270A		
	D122	VN008700	DIODE	1SS270A		
	D123	VG437200	DIODE.ZENR	MTZJ4.7C	4.7V	
	D124	VG440300	DIODE.ZENR	MTZJ12C	12V	
	D125	VG440300	DIODE.ZENR	MTZJ12C	12V	
	D126	VG440300	DIODE.ZENR	MTZJ12C	12V	
	D127	VN008700	DIODE	1SS270A		
	D128	VN008700	DIODE	1SS270A		
	D129	VN008700	DIODE	1SS270A		
	D251	VD631600	DIODE	1SS133,176		
	D252	VG440300	DIODE.ZENR	MTZJ12C	12V	
	D253	VG440300	DIODE.ZENR	MTZJ12C	12V	
	D254	VG438300	DIODE.ZENR	MTZJ6.8B	6.8V	
	D255	VG440300	DIODE.ZENR	MTZJ12C	12V	
	D256	VD631600	DIODE	1SS133,176		
	D257	VD631600	DIODE	1SS133,176		
⚠	D371	VM702000	DIODE.BRG	S5VB20	3.5A 200V	
⚠	D372	VS997800	DIODE	1T2		
⚠	D373	VS997800	DIODE	1T2		
⚠	D374	VS997800	DIODE	1T2		
⚠	D375	VS997800	DIODE	1T2		
	G101	VR463400	TERM.GND	D3.5		
	L101	VU038200	COIL	0.95uH		
	L102	VU038200	COIL	0.95uH		
	L103	V2604200	COIL	1uH		
	L104	V2604200	COIL	1uH		
	L105	V2604200	COIL	1uH		
*	PJ381	V7190400	JACK.PIN	6P		BG
	PN101	V3750200	PIN	L=70		
	PN102	V3750200	PIN	L=70		
	PN331	V3750200	PIN	L=70		
	PN371	V3750200	PIN	L=70		RTA
⚠	Q101	VK432900	TR	2SD1915F S,T		
⚠	Q102	VK432900	TR	2SD1915F S,T		
⚠	Q103	VK432900	TR	2SD1915F S,T		
⚠	Q104	VK432900	TR	2SD1915F S,T		
⚠	Q105	VK432900	TR	2SD1915F S,T		
⚠	Q106	VS883300	TR	2SB1565 E,F		
⚠	Q107	VP883000	TR	2SA893A D,E		
	Q108	VP883000	TR	2SA893A D,E		
⚠	Q109	V4096100	TR	2SC4614 S,T		
⚠	Q110A	iX630850	TR	2SA1695 O,P,Y		
⚠	Q110C	iX630860	TR	2SC4468 O,P,Y		
⚠	Q112	V4096000	TR	2SA1770 S,T		

* New Parts

P.C.B. MAIN

	Schm Ref.	PART NO.	Description			Market
⚠	Q113	V4096100	TR	2SC4614 S,T		
⚠	Q114A	iX630850	TR	2SA1695 O,P,Y		
⚠	Q114C	iX630860	TR	2SC4468 O,P,Y		
⚠	Q116	V4096000	TR	2SA1770 S,T		
⚠	Q117	V4096100	TR	2SC4614 S,T		
⚠	Q118A	iX630850	TR	2SA1695 O,P,Y		
⚠	Q118C	iX630860	TR	2SC4468 O,P,Y		
⚠	Q120	V4096000	TR	2SA1770 S,T		
⚠	Q121	V4096100	TR	2SC4614 S,T		
⚠	Q122A	iX630850	TR	2SA1695 O,P,Y		
⚠	Q122C	iX630860	TR	2SC4468 O,P,Y		
⚠	Q124	V4096000	TR	2SA1770 S,T		
⚠	Q125	V4096100	TR	2SC4614 S,T		
⚠	Q126A	iX630850	TR	2SA1695 O,P,Y		
⚠	Q126C	iX630860	TR	2SC4468 O,P,Y		
⚠	Q128	V4096000	TR	2SA1770 S,T		
	Q129	iC1815I0	TR	2SC1815 Y		
	Q130	VP883100	TR	2SC1890A D,E		
	Q131	VP883100	TR	2SC1890A D,E		
	Q132	VP883100	TR	2SC1890A D,E		
	Q133	VP883100	TR	2SC1890A D,E		
	Q134	VP883100	TR	2SC1890A D,E		
	Q135	VP883000	TR	2SA893A D,E		
⚠	Q136	iA1015I0	TR	2SA1015 Y		
	Q137	iC1815I0	TR	2SC1815 Y		
	Q138	iC1815I0	TR	2SC1815 Y		
	Q139	iC1815I0	TR	2SC1815 Y		
⚠	Q251	VR510800	TR	2SD2396 J,K		
	Q252	VP883100	TR	2SC1890A D,E		
	Q253	VP883100	TR	2SC1890A D,E		
	Q254	V3966800	TR	2SB949 O,Y		
	Q255	VP883100	TR	2SC1890A D,E		
	Q256	VP883100	TR	2SC1890A D,E		
	Q257	V3966800	TR	2SB949 O,Y		
	Q258	VP883100	TR	2SC1890A D,E		
	Q259	VP883100	TR	2SC1890A D,E		
	Q260	V3966800	TR	2SB949 O,Y		
	Q261	VP883100	TR	2SC1890A D,E		
	Q262	VP883100	TR	2SC1890A D,E		
	Q263	V3966800	TR	2SB949 O,Y		
	Q264	VP883100	TR	2SC1890A D,E		
	Q265	VP883100	TR	2SC1890A D,E		
	Q266	V3966800	TR	2SB949 O,Y		
	Q267	VP883100	TR	2SC1890A D,E		
	Q268	VP883100	TR	2SC1890A D,E		
	R103	V3946100	R.MTL.OXD	2.7KΩ	0.5W	
	R104	V3945100	R.MTL.OXD	390Ω	0.5W	
	R105	V3945600	R.MTL.OXD	1KΩ	0.5W	
	R106	V3945500	R.MTL.OXD	820Ω	0.5W	
	R108	VP941600	R.MTL.OXD	5.6KΩ	1W	
	R109	VP941600	R.MTL.OXD	5.6KΩ	1W	
	R110	V3946100	R.MTL.OXD	2.7KΩ	0.5W	
	R111	V3945100	R.MTL.OXD	390Ω	0.5W	

＊New Parts

	Schm Ref.	PART NO.	Description			Market
	R112	V3945600	R.MTL.OXD	1KΩ	0.5W	
	R113	V3945500	R.MTL.OXD	820Ω	0.5W	
	R115	VP941600	R.MTL.OXD	5.6KΩ	1W	
	R116	VP941600	R.MTL.OXD	5.6KΩ	1W	
	R117	V3946100	R.MTL.OXD	2.7KΩ	0.5W	
	R118	V3945100	R.MTL.OXD	390Ω	0.5W	
	R119	V3945600	R.MTL.OXD	1KΩ	0.5W	
	R120	V3945500	R.MTL.OXD	820Ω	0.5W	
	R122	VP941600	R.MTL.OXD	5.6KΩ	1W	
	R123	VP941600	R.MTL.OXD	5.6KΩ	1W	
	R124	V3946100	R.MTL.OXD	2.7KΩ	0.5W	
	R125	V3945100	R.MTL.OXD	390Ω	0.5W	
	R126	V3945600	R.MTL.OXD	1KΩ	0.5W	
	R127	V3945500	R.MTL.OXD	820Ω	0.5W	
	R129	VP941600	R.MTL.OXD	5.6KΩ	1W	
	R130	VP941600	R.MTL.OXD	5.6KΩ	1W	
	R131	V3946100	R.MTL.OXD	2.7KΩ	0.5W	
	R132	V3945100	R.MTL.OXD	390Ω	0.5W	
	R133	V3945600	R.MTL.OXD	1KΩ	0.5W	
	R134	V3945500	R.MTL.OXD	820Ω	0.5W	
	R136	VP941600	R.MTL.OXD	5.6KΩ	1W	
	R137	VP941600	R.MTL.OXD	5.6KΩ	1W	
	R138	HV755100	R.CAR.FP	100Ω	1/4W	
⚠	R139	HV754100	R.CAR.FP	10Ω	1/4W	
⚠	R143	VP939700	R.MTL.FLM	4.7Ω	1W	
⚠	R144	V3944800	R.MTL.OXD	220Ω	0.5W	
⚠	R145	V3873200	R.WW	0.22Ω	3W	
⚠	R146	VP939700	R.MTL.FLM	4.7Ω	1W	
	R147	HV755100	R.CAR.FP	100Ω	1/4W	
⚠	R148	VP939700	R.MTL.FLM	4.7Ω	1W	
⚠	R149	V3944800	R.MTL.OXD	220Ω	0.5W	
⚠	R150	V3873200	R.WW	0.22Ω	3W	
⚠	R151	VP939700	R.MTL.FLM	4.7Ω	1W	
	R152	HV755100	R.CAR.FP	100Ω	1/4W	
⚠	R153	HV754100	R.CAR.FP	10Ω	1/4W	
⚠	R154	V3944800	R.MTL.OXD	220Ω	0.5W	
⚠	R155	VU981700	R.MTL.PLAT	0.22Ω+0.22	3W	
⚠	R156	HV754100	R.CAR.FP	10Ω	1/4W	
	R157	HV755100	R.CAR.FP	100Ω	1/4W	
⚠	R158	HV754100	R.CAR.FP	10Ω	1/4W	
⚠	R159	V3944800	R.MTL.OXD	220Ω	0.5W	
⚠	R160	VU981700	R.MTL.PLAT	0.22Ω+0.22	3W	
⚠	R161	HV754100	R.CAR.FP	10Ω	1/4W	
	R162	HV755100	R.CAR.FP	100Ω	1/4W	
⚠	R163	VP939800	R.MTL.OXD	10Ω	1W	
⚠	R164	V3944800	R.MTL.OXD	220Ω	0.5W	
⚠	R165	V3873200	R.WW	0.22Ω	3W	
⚠	R166	VP939800	R.MTL.OXD	10Ω	1W	
⚠	R168	HV756150	R.CAR.FP	1.5KΩ	1/4W	
⚠	R173	VP939800	R.MTL.OXD	10Ω	1W	
⚠	R178	VP939800	R.MTL.OXD	10Ω	1W	
⚠	R183	VP939800	R.MTL.OXD	10Ω	1W	
	R188	VP939800	R.MTL.OXD	10Ω	1W	

＊New Parts

P.C.B. MAIN & POWER

	Schm Ref.	PART NO.	Description			Market
	R193	VP939800	R.MTL.OXD	10Ω	1W	
⚠	R203	VP939700	R.MTL.FLM	4.7Ω	1W	
⚠	R204	VP939700	R.MTL.FLM	4.7Ω	1W	
⚠	R205	VP940800	R.MTL.OXD	470Ω	1W	
⚠	R206	VP939700	R.MTL.FLM	4.7Ω	1W	
⚠	R207	VP940800	R.MTL.OXD	470Ω	1W	
⚠	R208	HV755100	R.CAR.FP	100Ω	1/4W	
⚠	R209	HV756100	R.CAR.FP	1KΩ	1/4W	
⚠	R211	VP940800	R.MTL.OXD	470Ω	1W	
⚠	R212	VP940800	R.MTL.OXD	470Ω	1W	
	R222	HV753470	R.CAR.FP	4.7Ω	1/4W	RTABGL
	R226	HV754100	R.CAR.FP	10Ω	1/4W	
	R227	HV754100	R.CAR.FP	10Ω	1/4W	
	R228	HV754100	R.CAR.FP	10Ω	1/4W	
	R229	HV754100	R.CAR.FP	10Ω	1/4W	
	R230	HV754100	R.CAR.FP	10Ω	1/4W	
	R235	VP940900	R.MTL.OXD	560Ω	1W	
	R236	VP940900	R.MTL.OXD	560Ω	1W	
⚠	R270	HV754100	R.CAR.FP	10Ω	1/4W	
⚠	R271	HV756470	R.CAR.FP	4.7KΩ	1/4W	
	R275	HV755100	R.CAR.FP	100Ω	1/4W	
	R282	HV755100	R.CAR.FP	100Ω	1/4W	
	R289	HV755100	R.CAR.FP	100Ω	1/4W	
	R296	HV755100	R.CAR.FP	100Ω	1/4W	
	R303	HV755100	R.CAR.FP	100Ω	1/4W	
	R331	HV753220	R.CAR.FP	2.2Ω	1/4W	RTABGL
	R332	HV753220	R.CAR.FP	2.2Ω	1/4W	RTABGL
⚠	R333	HV753220	R.CAR.FP	2.2Ω	1/4W	RTABGL
⚠	R334	HV753220	R.CAR.FP	2.2Ω	1/4W	RTABGL
⚠	R335	HV753220	R.CAR.FP	2.2Ω	1/4W	RTABGL
⚠	R336	HV753220	R.CAR.FP	2.2Ω	1/4W	RTABGL
⚠	R374	HV753100	R.CAR.FP	1Ω	1/4W	
⚠	R375	HV753100	R.CAR.FP	1Ω	1/4W	
⚠	RY101	VU566700	RELAY	DG24D2-OS/M		
⚠	RY102	VK438300	RELAY	DH24D2-OT/M2		
⚠	RY103	VK438300	RELAY	DH24D2-OT/M2		
⚠	RY104	VU566700	RELAY	DG24D2-OS/M		
	ST251	V4040500	SCR.TERM	M3		
	ST371	V4040500	SCR.TERM	M3		
	ST372	V4040500	SCR.TERM	M3		
	ST373	V4040500	SCR.TERM	M3		
	SW351	VV523900	SW.PUSH	PBS-YM-001		
⚠	SW371	V4104200	SW.SLIDE	SL13B-022-AMCS		
	TE101	V5912000	TERM.SP	6P LTS0610		BGL
*	TE101	V6771100	TERM.SP	6P LTS0610-1009		UCRTA
	TE331	V5912200	TERM.SP	6P LTS0810		BGL
*	TE331	V6771200	TERM.SP	8P LTS0810-1011		UCRTA
		BB070700	GND.MTL			

* New Parts

	Schm Ref.	PART NO.	Description			Market
*		V7210100	P.C.B.	POWER		UC
*		V7210200	P.C.B.	POWER		RT
*		V7210300	P.C.B.	POWER		A
*		V7210400	P.C.B.	POWER		B
*		V7210500	P.C.B.	POWER		GL
	CB701	VQ962800	CN.BS.PIN	7P		
	CB702	Vi878500	CN.BS.PIN	7P		
	CB721	Vi878500	CN.BS.PIN	7P		
	CB741	VQ960900	CN.BS.PIN	6P		
	CB742	VP206500	HOLDER.FUS	EYF-52BCT		UCGL
	CB743	VP206500	HOLDER.FUS	EYF-52BCT		UCGL
	CB744	VP206500	HOLDER.FUS	EYF-52BCT		
	CB745	VP206500	HOLDER.FUS	EYF-52BCT		
	CB746	VG879900	CN.BS.PIN	2P		
	CB761	VP206500	HOLDER.FUS	EYF-52BCT		RT
	CB762	VP206500	HOLDER.FUS	EYF-52BCT		RT
	C703	VG287600	C.EL	100uF	25V	
	C704	VG287600	C.EL	100uF	25V	
	C705	VG288500	C.EL	10uF	50V	
	C706	UR838100	C.EL	100uF	16V	
	C707	VG288500	C.EL	10uF	50V	
	C708	UR838100	C.EL	100uF	16V	
	C711	UR847100	C.EL	10uF	25V	
	C712	UR847100	C.EL	10uF	25V	
	C713	UR838100	C.EL	100uF	16V	
	C714	UR847100	C.EL	10uF	25V	
⚠	C723	UR749470	C.EL	4700uF	25V	
⚠	C724	UR749470	C.EL	4700uF	25V	
⚠	C725	UR73A100	C.EL	10000uF	16V	
	C727	VE326000	C.MYLAR.ML	0.1uF	50V	
	C728	VE326000	C.MYLAR.ML	0.1uF	50V	
	C729	VE326000	C.MYLAR.ML	0.1uF	50V	
	C730	VE326000	C.MYLAR.ML	0.1uF	50V	
	C731	VS745400	C.POL.MTL	0.1uF	100V	
⚠	C732	UR73A100	C.EL	10000uF	16V	
	C741	UR848470	C.EL	470uF	25V	RT
	C743	VJ599100	C.CE.TUBLR	0.1uF	50V	
	C744	UR749100	C.EL	1000uF	25V	UCABGL
	C745	UA654100	C.MYLAR	0.01uF	50V	UCABGL
	C746	UR897100	C.EL	10uF	100V	RT
	C747	UA654100	C.MYLAR	0.01uF	50V	
⚠	C748	V6185300	C.CE.SAFTY	0.01uF	275V	
	C749	UU167100	C.EL	10uF	50V	RT
	C750	UA654100	C.MYLAR	0.01uF	50V	RT
	C751	UA654100	C.MYLAR	0.01uF	50V	RT
	C752	UU147100	C.EL	10uF	25V	RT
⚠	D722	VQ379300	DIODE.BRG	S1VB20	1.0A 200V	
⚠	D723	V4269600	DIODE.BRG	D2SBA20	1.5A 200V	
	D741	VD631600	DIODE	1SS133,176		
	D742	VG440400	DIODE.ZENR	MTZJ13A		RT
	D743	VV307700	DIODE	1N4002S		
	D744	VV307700	DIODE	1N4002S		
	D745	VV307700	DIODE	1N4002S		

* New Parts

P.C.B. POWER & CHIP RESISTOR

	Schm Ref.	PART NO.	Description		Market
	D746	VV307700	DIODE	1N4002S	
	D747	VV307700	DIODE	1N4002S	RT
	D748	VD631600	DIODE	1SS133,176	RT
⚠	F741	VS822500	FUSE	2.0A 125V	UC
⚠	F741	VT942900	FUSE	TH2.5A 250V	GL
⚠	F742	KB000790	FUSE	T4.0A 250V	ABGL
⚠	F742	VS823300	FUSE	T8.0A 125V	UCRT
⚠	F761	KB000790	FUSE	T4.0A 250V	RT
	HS741	VR506800	HEAT.SINK	PUH16-25	
⚠	IC701	XJ608A00	IC	NJM7812FA	
⚠	IC702	XD343A00	IC	NJM79M12FA	
⚠	IC703	XJ607A00	IC	NJM7805FA 5V	
⚠	IC704	XE436A00	IC	NJM79M05FA	
⚠	IC705	XJ607A00	IC	NJM7805FA 5V	
	Q741	iC174020	TR	2SC1740S R,S	
	Q742	VR510800	TR	2SD2396 J,K	RT
	Q743	VR510800	TR	2SD2396 J,K	RT
	Q744	iE102620	FET	2SK246 Y	RT
	R705	HV753100	R.CAR.FP	1Ω 1/4W	
	R706	HV753100	R.CAR.FP	1Ω 1/4W	
	R709	HV753100	R.CAR.FP	1Ω 1/4W	
	R710	VP939500	R.MTL.FLM	1Ω 1W	
	R711	VP939600	R.MTL.FLM	2.2Ω 1W	
⚠	RY741	V2712300	RELAY	DC SDT-S-112LMR	
	ST741	V4040500	SCR.TERM	M3	
⚠*	SW761	V7182300	VOLT.SELCT	R8140213	RT
⚠	T741	XW606A00	TRANS.PWR		UC
⚠	T741	XW974A00	TRANS.PWR		RT
⚠	T741	XW608A00	TRANS.PWR		ABGL
⚠	TE741	VU543100	OUTLET.AC	2P	UC
⚠	TE741	V5867400	OUTLET.AC	2P AC-182-GB-11V	RT
⚠	TE741	VT915000	OUTLET.AC	2P	A
⚠	TE741	VU543300	OUTLET.AC	1P	B
⚠	TE741	VU543400	OUTLET.AC	2P	GL

*New Parts

	Schm Ref.	PART NO.	Description		Market
		EP600140	SCR.BND.HD	3x10 MFZN2-BL	RT
		RD353100	R.CAR.CHP	1Ω 1/10W	
		RD353220	R.CAR.CHP	2.2Ω 1/10W	
*		RD353470	R.CAR.CHP	4.7Ω 1/16W	
		RD354330	R.CAR.CHP	33Ω 1/10W	
		RD354470	R.CAR.CHP	47Ω 1/16W	
		RD354750	R.CAR.CHP	75Ω 1/10W	
		RD354820	R.CAR.CHP	82Ω 1/10W	
		RD355100	R.CAR.CHP	100Ω 1/10W	
*		RD355180	R.CAR.CHP	180Ω 1/16W	
		RD355220	R.CAR.CHP	220Ω 1/10W	
*		RD355240	R.CAR.CHP	240Ω 1/10W	
		RD355330	R.CAR.CHP	330Ω 1/10W	
		RD355390	R.CAR.CHP	390Ω 1/10W	
		RD355470	R.CAR.CHP	470Ω 1/10W	
		RD355680	R.CAR.CHP	680Ω 1/10W	
		RD356100	R.CAR.CHP	1KΩ 1/10W	
		RD356120	R.CAR.CHP	1.2KΩ 1/10W	
		RD356130	R.CAR.CHP	1.3KΩ 1/10W	
		RD356150	R.CAR.CHP	1.5KΩ 1/10W	
		RD356160	R.CAR.CHP	1.6KΩ 1/10W	
		RD356180	R.CAR.CHP	1.8KΩ 1/10W	
		RD356220	R.CAR.CHP	2.2KΩ 1/10W	
		RD356270	R.CAR.CHP	2.7KΩ 1/10W	
		RD356300	R.CAR.CHP	3KΩ 1/10W	
		RD356330	R.CAR.CHP	3.3KΩ 1/10W	
		RD356360	R.CAR.CHP	3.6KΩ 1/10W	
		RD356390	R.CAR.CHP	3.9KΩ 1/10W	
		RD356470	R.CAR.CHP	4.7KΩ 1/10W	
		RD356510	R.CAR.CHP	5.1KΩ 1/10W	
		RD356560	R.CAR.CHP	5.6KΩ 1/10W	
		RD356680	R.CAR.CHP	6.8KΩ 1/10W	
		RD356750	R.CAR.CHP	7.5KΩ 1/10W	
		RD356820	R.CAR.CHP	8.2KΩ 1/10W	
		RD357100	R.CAR.CHP	10KΩ 1/10W	
		RD357120	R.CAR.CHP	12KΩ 1/10W	
		RD357150	R.CAR.CHP	15KΩ 1/10W	
		RD357180	R.CAR.CHP	18KΩ 1/10W	
		RD357220	R.CAR.CHP	22KΩ 1/10W	
		RD357330	R.CAR.CHP	33KΩ 1/10W	
		RD357470	R.CAR.CHP	47KΩ 1/10W	
		RD357560	R.CAR.CHP	56KΩ 1/10W	
		RD357820	R.CAR.CHP	82KΩ 1/10W	
		RD358100	R.CAR.CHP	100KΩ 1/10W	
		RD358150	R.CAR.CHP	150KΩ 1/10W	
		RD358470	R.CAR.CHP	470KΩ 1/10W	
		RD358680	R.CAR.CHP	680KΩ 1/10W	
		RD359100	R.CAR.CHP	1MΩ 1/10W	
		RD359220	R.CAR.CHP	2.2MΩ 1/10W	

*New Parts

■ EXPLODED VIEW

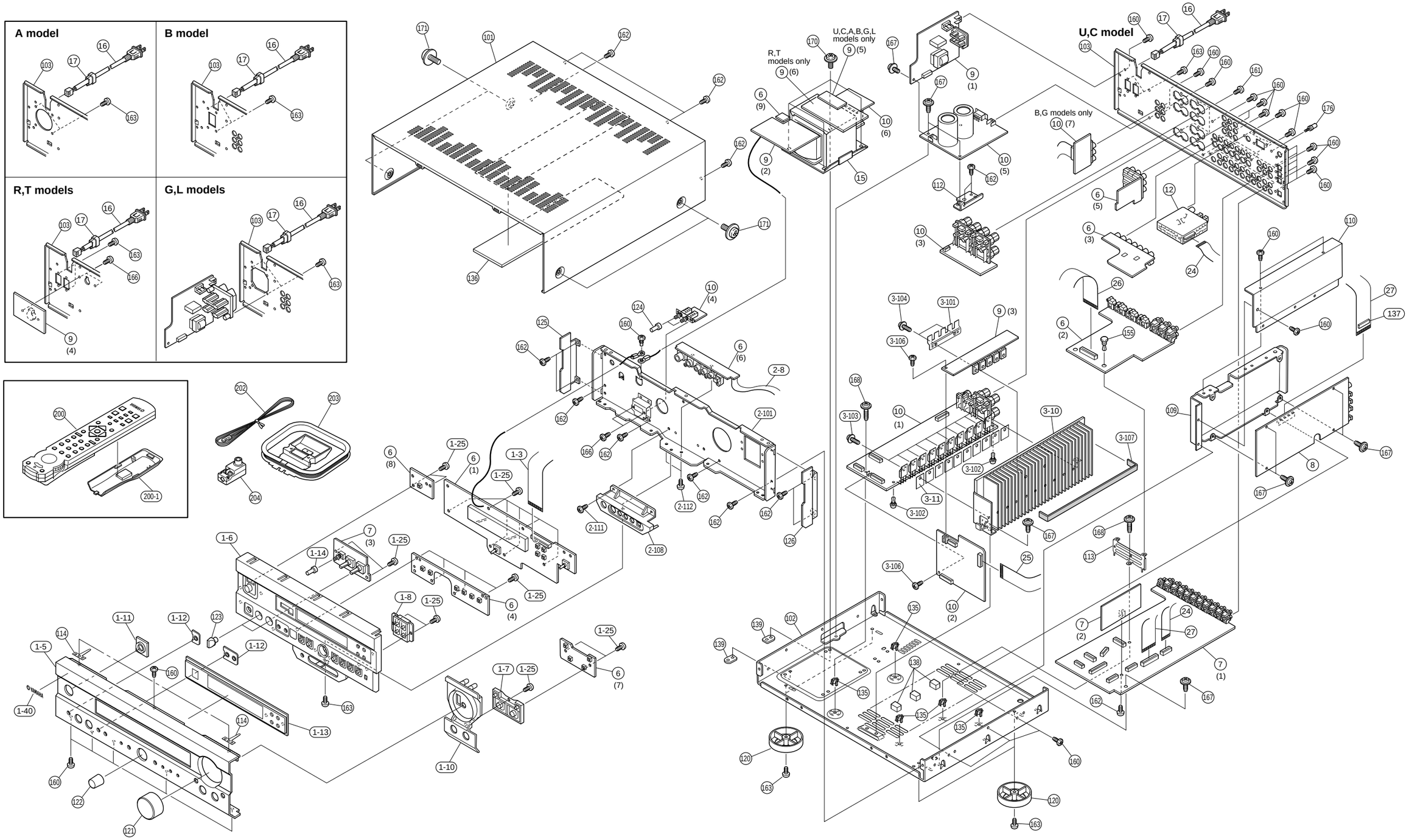

■ MECHANICAL PARTS

	Ref. No.	PART NO.	Description		Remarks	Markets
*	1-3	V7331800	S FLEXIBLE FLAT CABLE	37P 250mm P=1.25		
*	1-5	V6870900	FRONT PANEL		RXV620BL	
*	1-5	V6871000	FRONT PANEL		RXV620GD	
*	1-5	V6871100	FRONT PANEL		RXV620RDSBL	
*	1-5	V6871200	FRONT PANEL		RXV620RDSGD	
*	1-5	V6871300	FRONT PANEL		RXV620RDSTI	
*	1-5	V6871400	FRONT PANEL		HTR5460GP	
*	1-5	V6871500	FRONT PANEL		HTR5460GD	
*	1-6	V6873700	SUB PANEL		RXV620BL	
*	1-6	V6873800	SUB PANEL		RXV620GD	
*	1-6	V6874000	SUB PANEL		HTR5460GP	
*	1-6	V6873900	SUB PANEL		RXV620RDSTI	
*	1-7	V6874400	BUTTON/INPUT		BL	
*	1-7	V6874500	BUTTON/INPUT		GD	
*	1-7	V6874600	BUTTON/INPUT		TI	
*	1-8	V6874800	BUTTON/RDS		BL	
*	1-8	V6874900	BUTTON/RDS		GD	
*	1-8	V6875000	BUTTON/RDS		TI	
*	1-10	V6878900	ESCUTCHEON/INPUT		BL	
*	1-10	V6879000	ESCUTCHEON/INPUT		GD	
*	1-10	V6879100	ESCUTCHEON/INPUT		TI	
	1-11	V6003800	ESCUTCHOEN/POWER		BL	
	1-11	V6003900	ESCUTCHOEN/POWER		GD	
	1-11	V6004000	ESCUTCHOEN/POWER		TI	
*	1-12	V6879800	ESCUTCHEN/D5			
*	1-13	V6879900	SHEET, WINDOW		RXV620	
*	1-13	V6880000	SHEET, WINDOW		RXV620RDS	
*	1-13	V7391100	SHEET, WINDOW		HTR5460	
	1-14	V6001900	BUTTON D5		BL	
	1-14	V6002000	BUTTON D5		GD	
	1-14	V6002100	BUTTON D5		TI	
	1-25	EP630220	BIND HEAD P-TITE SCREW	3x8 ZMC2-BL		
	1-40	V6034100	EMBLEM		BL	
	1-40	V6034200	EMBLEM		GD	
*	2-8	MF110180	FLEXIBLE FLAT CABLE	10P 180mm P=1.25		
*	2-101	V6864600	SUB CHASSIS			
*	2-108	V6876500	SUPPORT/PJ		BL	
*	2-108	V6876600	SUPPORT/PJ		GD	
*	2-108	V6876700	SUPPORT/PJ		TI	
	2-111	EP600830	BIND HEAD B-TITE SCREW	3x8 MFC2-BL		
	2-112	VN413300	BIND HEAD BONDING B-T. SCREW	3x8 MFZN2-BL		
*	3-10	V6865100	HEAT SINK			UC
*	3-10	V7558800	HEAT SINK			RTABGL
	3-11	VV849300	SHEET	19x24		
	3-101	V2461000	SUPPORT, TR			
	3-102	VQ368600	PUSH RIVET	P3555-B		
	3-103	VK173200	SCREW, TRANSISTOR	3x15 SP FCM3		
	3-104	VT669300	PW HEAD B-TITE SCREW	3x8-8 MFC2		
	3-106	EG330030	BIND HEAD SCREW	3x6 FCRM3-BL		
	3-107	V5454200	DAMPER	2/10/260		
*	6	V7208900	P.C.B. ASS'Y	OPERATION		UC
*	6	V7209000	P.C.B. ASS'Y	OPERATION		RT
*	6	V7209100	P.C.B. ASS'Y	OPERATION		AL

* New Parts

	Ref. No.	PART NO.	Description		Remarks	Markets
*	6	V7209200	P.C.B. ASS'Y	OPERATION		BG
*	7	V7209500	P.C.B. ASS'Y	INPUT		UCRT
*	7	V7209600	P.C.B. ASS'Y	INPUT		A
*	7	V7209700	P.C.B. ASS'Y	INPUT		BG
*	7	V7209800	P.C.B. ASS'Y	INPUT		L
*	8	V7209900	P.C.B. ASS'Y	DSP		
*	9	V7210100	P.C.B. ASS'Y	POWER		UC
*	9	V7210200	P.C.B. ASS'Y	POWER		RT
*	9	V7210300	P.C.B. ASS'Y	POWER		A
*	9	V7210400	P.C.B. ASS'Y	POWER		B
*	9	V7210500	P.C.B. ASS'Y	POWER		GL
*	10	V7210700	P.C.B. ASS'Y	MAIN		U
*	10	V7210800	P.C.B. ASS'Y	MAIN		C
*	10	V7210900	P.C.B. ASS'Y	MAIN		RTA
*	10	V7211000	P.C.B. ASS'Y	MAIN		BG
*	10	V7211100	P.C.B. ASS'Y	MAIN		L
*	12	V6782300	AM/FM TUNER	TFCE1U115A U,C		UCRT
*	12	V6782400	AM/FM TUNER	TFCE1E317A A,B,G		ABGL
⚠	15	XY191A00	POWER TRANSFORMER			U
⚠	15	XW611A00	POWER TRANSFORMER			C
⚠*	15	XZ955A00	POWER TRANSFORMER			RT
⚠*	15	XZ956A00	POWER TRANSFORMER			A
⚠*	15	XZ957A00	POWER TRANSFORMER			BGL
⚠	16	V2363800	POWER CORD ASS'Y			UC
⚠	16	VZ542500	POWER CORD ASS'Y			RT
⚠	16	V2296800	POWER CORD ASS'Y			A
⚠	16	VV437300	POWER CORD ASS'Y			B
⚠	16	VN363700	POWER CORD ASS'Y			GL
	17	V2438700	CORD STOPPER	10P1		
	24	MF115180	FLEXIBLE FLAT CABLE	15P 180mm P=1.25		
*	25	MF118200	FLEXIBLE FLAT CABLE	18P 200mm		
	26	MF125100	FLEXIBLE FLAT CABLE	25P 100mm		
	27	MF227160	S FLEXIBLE FLAT CABLE	27P 160mm		
*	101	V7558900	TOP COVER		BL(RXV620)	
*	101	V7559000	TOP COVER		TI(RXV620)	
*	101	V7559300	TOP COVER		GD(RXV620)	
	101	VV121300	TOP COVER		BL(HTR5460)	
*	102	V6955500	CHASSIS			
*	103	V6865700	REAR PANEL		RXV620	U
*	103	V6865800	REAR PANEL		RXV620	C
*	103	V6865900	REAR PANEL		RXV620	RT
*	103	V6866000	REAR PANEL		RXV620	A
*	103	V6866100	REAR PANEL		RXV620	L
*	103	V6866300	REAR PANEL		RXV620RDS	B
*	103	V6866400	REAR PANEL		RXV620RDS	G
*	103	V6866700	REAR PANEL		HTR5460	U
*	103	V6866800	REAR PANEL		HTR5460	C
*	103	V6866900	REAR PANEL		HTR5460	T
*	103	V6867000	REAR PANEL		HTR5460	A
*	109	V6864900	SHIELD CASE			
*	110	V6865000	SHIELD CASE COVER			
	112	V4168900	FRAME, PCB			
*	113	V6865400	SUPPORT/PCB-620			

* New Parts

	Ref. No.	PART NO.	Description			Remarks	Markets
	114	VQ775900	GROUND PLATE				
	120	VS025000	LEG	D60xH21		V620BL,V620TI	
	120	V0042500	LEG	D60xH21		V620GD,5460GD	
	120	VV544300	LEG	D60xH21		5460BL	
	121	V6002200	KNOB D43			BL	
	121	V6002300	KNOB D43			GD	
	121	V6002400	KNOB D43			TI	
*	122	V6877900	KNOB/D18			BL	
*	122	V6878000	KNOB/D18			GD	
*	122	V6878100	KNOB/D18			TI	
	123	V6001600	KNOB D15			BL	
	123	V6001700	KNOB D15			GD	
	123	V6001800	KNOB D15			TI	
*	124	V6876100	BUTTON/D5			BL	
*	124	V6876200	BUTTON/D5			GD	
*	124	V6876300	BUTTON/D5			TI	
*	125	V6877200	PLATE/SIDE L			BL	
*	125	V6877300	PLATE/SIDE L			GD	
*	125	V6877400	PLATE/SIDE L			TI	
*	126	V6877600	PLATE/SIDE R			BL	
*	126	V6877700	PLATE/SIDE R			GD	
*	126	V6877800	PLATE/SIDE R			TI	
	135	VR264400	SPACER	H8			
*	136	V7610900	SHEET/S				RABGTL
	137	VP857500	DAMPER	4x10x30			
	138	V2879500	SPACER PCB-M				
	139	V7616600	DAMPER				
	155	VQ368600	PUSH RIVET	P3555-B			
	160	VN413300	BIND HEAD BONDING B-T. SCREW	3x8	MFZN2-BL		
	161	VY731200	BONDING HEAD TAPPING SCREW	3x10	MFNI33		
	162	EP600830	BIND HEAD B-TITE SCREW	3x8	MFC2-BL		
	163	EP600250	BIND HEAD B-TITE SCREW	3x8	ZMC2-Y		
	166	EG330030	BIND HEAD SCREW	3x6	FCRM3-BL		
	167	VT669300	PW HEAD B-TITE SCREW	3x8-8	MFC2		
	168	VT669400	PW HEAD B-TITE SCREW	3x15-8	MFC2		
	170	21991500	PW HEAD S-TITE SCREW	4x8-10	FCRM3-BL		
	171	21991500	PW HEAD S-TITE SCREW	4x8-10	FCRM3-BL	BL	
	171	VD069600	PW HEAD S-TITE SCREW	4x8-10	MFNI-33	GD	
	171	VH313200	BW HEAD S-TITE SCREW	4x8-10	FNM3-BL	TI	
	176	AA627310	GROUND TERMINAL				
			ACCESSORIES				
*	200	V6941100	REMOTE CONTROL TRANSMITTER	RAV214			UCRATL
*	200	V6941200	REMOTE CONTROL TRANSMITTER	RAV215			BG
	200-1	AAX14030	LID	BW0780/1		71078002000	
	202	V6267000	ANTENNA, FM	1.4m 1pc			UCRT
	202	VQ147100	ANTENNA, FM	1.4m 1pc			ABGL
	203	VR248500	ANTENNA, AM LOOP	1.0m 1pc			
	204	VE364900	ANTENNA ADAPTER	PAL 75-300Ω 1pc			B
			BATTERY, MANGANESE	SUM-4,AAA,R03			

* New Parts

REMOTE CONTROL TRANSMITTER

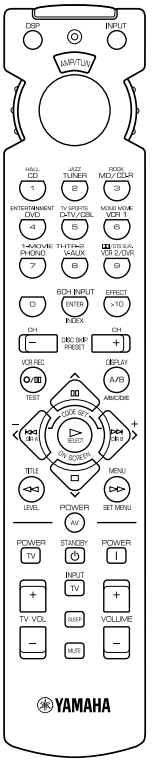

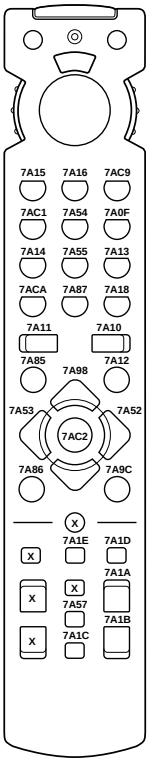

ONLY "AMP/TUNER" 0003 CODE

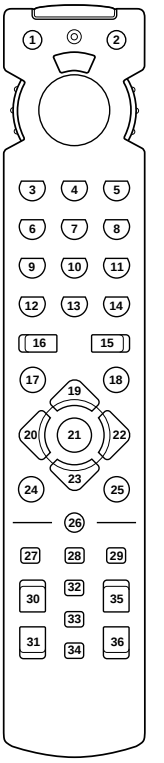

KEY POSITION

Function Keychart

NO		TV	VCR	CABLE/SAT	CD	AMP/TUNER	TAPE/MD	DVD MENU	DVD/LD	DSP/TUNER	
1	DSP	Shift DSP PROGRAM									
2	INPUT	Shift INPUT SELECT									0023
3	1	CH1	CH1	CH1	1	CD	1	1	1	HALL	P1
4	2	CH2	CH2	CH2	2	TUNER	2	2	2	JAZZ	P2
5	3	CH3	CH3	CH3	3	MD/CD-R	3	3	3	ROCK	P3
6	4	CH4	CH4	CH4	4	DVD	4	4	4	ENTERTAINMENT	P4
7	5	CH5	CH5	CH5	5	D-TV/CBL	5	5	5	TV SPORTS	P5
8	6	CH6	CH6	CH6	6	VCR1	6	6	6	MONO MOVIE	P6
9	7	CH7	CH7	CH7	7	PHONO	7	7	7	MOVIE THTR1	P7
10	8	CH8	CH8	CH8	8	V-AUX	8	8	8	MOVIE THTR2	P8
11	9	CH9	CH9	CH9	9	VCR2/DVR	9	9	9	DD/dts SUR	-
12	0	CH0/*CH10(J)*	CH0	CH0	0	-	0	0	0	-	-
13	ENTER	CH Enter/Recall/*CH11(J)*	CH Enter/Recall	CH Enter	INDEX	6CH INPUT	-	INDEX	INDEX	-	-
14	>10	_/_ _/*CH12(J)*	_/_ _	_/_ _	+10	EFFECT	+10	+10	+10	EFFECT	-
15	CH+	TV CH+	VCR CH+	CBL/SAT CH+	DISC+	PRESET+	-	DISC+		PRESET+	<-
16	CH-	TV CH-	VCR CH-	CBL/SAT CH-	DISC-	PRESET-	-	DISC-		PRESET-	<-
17	REC	VCR REC		-	-	TEST	REC/PAUSE	RETURN	-	TEST	<-
18	DISPLAY	DISPLAY	DISPLAY	DISPLAY/GUIDE	DISPLAY	A/B/C/D/E	DISPLAY/A-B	DISPLAY	DISPLAY	A/B/C/D/E	<-
19	PAUSE	VCR PAUSE		Up	PAUSE	Up	PAUSE	Up	PAUSE	Up	<-
20	SKIP-	-	-	Left	SKIP-	Left	SKIP-/DIR A	Left	SKIP/CHAP-	Left	<-
21	PLAY	VCR PLAY		Menu Select	PLAY	ON SCREEN	PLAY	Select	PLAY	ON SCREEN	<-
22	SKIP+	-	-	Right	SKIP+	Right	SKIP+/DIR B	Right	SKIP/CHAP+	Right	<-
23	STOP	VCR STOP		Down	STOP	Down	STOP	Down	STOP	Down	<-
24	REW	VCR REW		RECALL	REW	LEVEL	REW	TITLE	REW	LEVEL	<-
25	FF	VCR FF		MENU	FF	SET MENU	FF	MENU	FF	SET MENU	<-
26	AV POWER	VCR POWER		CBL/SAT POWER	CD POWER	-	TAPE/MD POWER	DVD/LD POWER		-	<-
27	TV POWER	TV POWER									
28	STANDBY	STANDBY(OFF)									
29	POWER	AMP POWER									
30	TV VOL+	TV VOL+									
31	TV VOL-	TV VOL-									
32	TV INPUT	TV INPUT									
33	SLEEP	TV SLEEP	SLEEP								
34	MUTE	TV MUTE	MUTE								
35	VOL+	VOL+									
36	VOL-	VOL-									
	Library	TV	VCR	CABLE SAT/SAT	CD	TUNER 0023	TAPE MD CD-R	(DVD)	DVD/LD LD	TUNER 0023	
	Change Device	x	x	AUX	x	x	x	AUX	x	x	
	Default	0101	0002	0006	0005(Yamaha)	0003(AMP)	MD 0024(Yamaha)	0008(Yamaha)		0013(DSP)	

List of the Yamaha Code (NEC Format)

Key No.	Key Name	DVD		DVD MENU		LD		CD		
			Yamaha 0008		Yamaha 0008		Yamaha 0007		Yamaha 0005	Yamaha 0015
3	1	1	7C-94	1	7C-94	1	7C-17	1	79-11	79-11
4	2	2	7C-95	2	7C-95	2	7C-18	2	79-12	79-12
5	3	3	7C-96	3	7C-96	3	7C-19	3	79-13	79-13
6	4	4	7C-97	4	7C-97	4	7C-1A	4	79-14	79-14
7	5	5	7C-98	5	7C-98	5	7C-1B	5	79-15	79-15
8	6	6	7C-99	6	7C-99	6	7C-1C	6	79-16	79-16
9	7	7	7C-9A	7	7C-9A	7	7C-1D	7	79-17	79-17
10	8	8	7C-9B	8	7C-9B	8	7C-1E	8	79-18	79-18
11	9	9	7C-9C	9	7C-9C	9	7C-1F	9	79-19	79-19
12	0	0	7C-93	0	7C-93	0	7C-16	0	79-10	79-10
13	ENTER	INDEX	7C-9E	INDEX	7C-9E	CHP/TIME	7C-15	INDEX	79-0B	79-0B
14	>10	+10	7C-9D	+10	7C-9D	+10	7C-5D	+10	79-1A	79-1A
15	CH+	DISC+	7C-8B	DISC+	7C-8B	DISC+	–	DISC+	7A-4F	79-4F
16	CH-	DISC-	7C-8A	DISC-	7C-8A	DISC-	–	DISC-	7A-50	79-50
17	REC	REC	–	RETURN	7C-B7	REC	–	REC	–	–
18	DISPLAY	DISPLAY	7C-A6	DISPLAY	7C-A6	DISPLAY	7C-13	DISPLAY	79-0A	79-0A
19	PAUSE	PAUSE	7C-B3	Up	7C-B4	PAUSE	7C-5A	PAUSE	7A-09	79-55
20	SKIP-	SKIP/CHAP-	7C-B9	Left	7C-B5	SKIP/CHAP-	7C-02	SKIP-	7A-0B	79-04
21	PLAY	PLAY	7C-B2	Select	7C-B8	PLAY	7C-05	PLAY	7A-08	79-02
22	SKIP+	SKIP/CHAP+	7C-BA	Right	7C-B6	SKIP/CHAP+	7C-03	SKIP+	7A-0A	79-07
23	STOP	STOP	7C-B5	Down	7C-B3	STOP	7C-5B	STOP	7A-06	79-56
24	REW	REW	7C-B6	TITLE	7C-B1	REW	7C-06	REW	7A-0D	79-05
25	FF	FF	7C-B7	MENU	7C-B2	FF	7C-07	FF	7A-0C	79-06
26	AV POWER	DVD POWER	7C-B0	DVD POWER	7C-B0	LD POWER	–	CD POWER	–	–
27	TV POWER		Punch Through		Punch Through		Punch Through		Punch Through	
28	STANDBY		Punch Through		Punch Through		Punch Through		Punch Through	
29	POWER		Punch Through		Punch Through		Punch Through		Punch Through	
30	TV VOL+		Punch Through		Punch Through		Punch Through		Punch Through	
31	TV VOL-		Punch Through		Punch Through		Punch Through		Punch Through	
32	TV INPUT		Punch Through		Punch Through		Punch Through		Punch Through	
33	SLEEP		Punch Through		Punch Through		Punch Through		Punch Through	
34	MUTE		Punch Through		Punch Through		Punch Through		Punch Through	
35	VOL+		Punch Through		Punch Through		Punch Through		Punch Through	
36	VOL-		Punch Through		Punch Through		Punch Through		Punch Through	

– : No Code

Key No.	Key Name		TAPE	TAPE	MD	AMP/TUNER			
			Yamaha 0004	Yamaha 0014	Yamaha 0024		AMP 0003	DSP 0013	TUNER 0023
3	1	1	–	–	79-85	CD	7A-15	7A-88	7A-E5
4	2	2	–	–	79-85	TUNER	7A-16	7A-89	7A-E6
5	3	3	–	–	79-87	MD/CD-R	7A-18	7A-8A	7A-E7
6	4	4	–	–	79-88	DVD	7A-17	7A-8B	7A-E8
7	5	5	–	–	79-89	D-TV	7A-54	7A-8C	7A-E9
8	6	6	–	–	79-8A	VCR	7A-0F	7A-8D	7A-EA
9	7	7	–	–	79-8B	PHONO	7A-14	7A-8E	7A-EB
10	8	8	–	–	79-8C	CBL/SAT	7A-C0	7A-8F	7A-EC
11	9	9	–	–	79-8D	V-AUX	7A-55	7A-90	–
12	0	0	–	–	79-8E	EXT.DEC.	7A-87	7A-91	–
13	ENTER	INDEX	–	–	–	A/B/C/D/E	7A-12	7A-12	7A-12
14	>10	+10	–	–	79-8F	(VCR2)	7A-13	7A-56	–
15	CH+	CH+	–	–	–	PRESET+	7A-10	7A-10	7A-10
16	CH-	CH-	–	–	–	PRESER-	7A-11	7A-11	7A-11
17	REC	REC/PAUSE	7A-04	7F-04	79-AF	TEST	7A-85	7A-85	7A-85
18	DISPLAY	A/B DISPLAY	7A-06	7F-06	79-A5	ON SCREEN	7A-C2	7A-C2	7A-C2
19	PAUSE	PAUSE	–	–	79-A9	Up	7A-98	7A-98	7A-98
20	SKIP-	DIR A/SKIP-	7A-07	7F-07	79-AB	Left	7A-53	7A-53	7A-53
21	PLAY	PLAY	7A-00	7F-00	79-A8		–	–	–
22	SKIP+	DIR B/SLIP+	7A-40	7F-0B	79-AE	Right	7A-52	7A-52	7A-52
23	STOP	STOP	7A-03	7F-03	79-AA	Down	7A-99	7A-99	7A-99
24	REW	REW	7A-01	7F-01	79-AC	TIME/LEVEL	7A-86	7A-86	7A-86
25	FF	FF	7A-02	7F-02	79-AD	SET MENU	7A-9C	7A-9C	7A-9C
26	AV POWER	TAPE/MD POWER	–	–	–		–	–	–
27	TV POWER		Punch Through	Punch Through	Punch Through		Punch Through	Punch Through	Punch Through
28	STANDBY		Punch Through	Punch Through	Punch Through	AMP STANDBY	7A-1E	7A-1E	7A-1E
29	POWER		Punch Through	Punch Through	Punch Through	AMP POWER	7A-1D	7A-1D	7A-1D
30	TV VOL+		Punch Through	Punch Through	Punch Through		Punch Through	Punch Through	Punch Through
31	TV VOL-		Punch Through	Punch Through	Punch Through		Punch Through	Punch Through	Punch Through
32	TV INPUT		Punch Through	Punch Through	Punch Through		Punch Through	Punch Through	Punch Through
33	SLEEP		Punch Through	Punch Through	Punch Through	AMP SLEEP	7A-57	7A-57	7A-57
34	MUTE		Punch Through	Punch Through	Punch Through	AMP MUTE	7A-1C	7A-1C	7A-1C
35	VOL+		Punch Through	Punch Through	Punch Through	AMP VOL+	7A-1A	7A-1A	7A-1A
36	VOL-		Punch Through	Punch Through	Punch Through	AMP VOL-	7A-1B	7A-1B	7A-1B

– : No Code

■ SCHEMATIC DIAGRAM

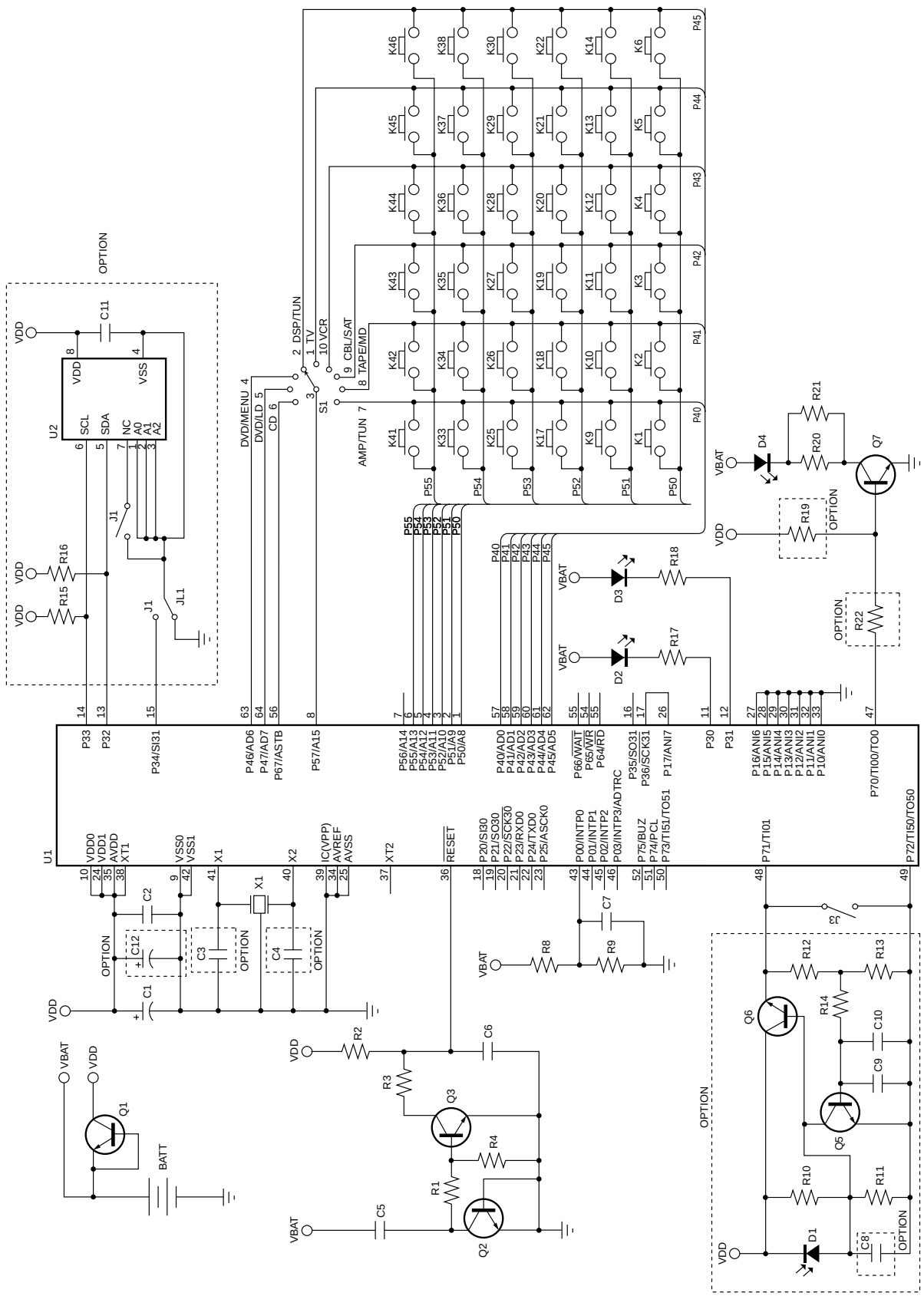

Parts List for Carbon Resistors

Value	**1/4W** Type Part No.	**1/6W** Type Part No.	Value	**1/4W** Type Part No.	**1/6W** Type Part No.
1.0 Ω	HJ35 3100	HF85 3100	10 kΩ	HF45 7100	HF45 7100
1.8 Ω	HJ35 3180	❊	11 kΩ	HF45 7110	HF45 7110
2.2 Ω	HJ35 3220	HF85 3220	12 kΩ	HJ35 7120	HF85 7120
3.3 Ω	HJ35 3330	HF85 3330	13 kΩ	HF45 7130	HF45 7130
4.7 Ω	HJ35 3470	HF85 3470	15 kΩ	HF45 7150	HF45 7150
5.6 Ω	HJ35 3560	HF85 3560	18 kΩ	HF45 7180	HF45 7180
10 Ω	HF45 4100	HF45 4100	22 kΩ	HF45 7220	HF45 7220
15 Ω	HJ35 4150	HF85 4150	24 kΩ	HF45 7240	HF45 7240
22 Ω	HF45 4220	HF45 4220	27 kΩ	HJ35 7270	HF85 7270
27 Ω	HJ35 4270	HF85 4270	30 kΩ	HF45 7300	HF45 7300
33 Ω	HF45 4330	HF45 4330	33 kΩ	HF45 7330	HF45 7330
39 Ω	HJ35 4470	HF85 4390	36 kΩ	HF45 7360	HF45 7360
47 Ω	HF45 4470	HF45 4470	39 kΩ	HF45 7390	HF45 7390
56 Ω	HF45 4560	HF45 4560	47 kΩ	HF45 7470	HF45 7470
68 Ω	HF45 4680	HF45 4680	51 kΩ	HF45 7510	HF45 7510
75 Ω	HF45 4750	HF45 4750	56 kΩ	HF45 7560	HF45 7560
82 Ω	HF45 4820	HF45 4820	62 kΩ	HF45 7620	HF45 7620
91 Ω	HF45 4910	HF45 4910	68 kΩ	HF45 7680	HF45 7680
100 Ω	HF45 5100	HF45 5100	82 kΩ	HF45 7820	HF45 7820
110 Ω	HJ35 5110	HF85 5110	91 kΩ	HF45 7910	HF45 7910
120 Ω	HF45 5120	HF45 5120	100 kΩ	HF45 8100	HF45 8100
150 Ω	HF45 5150	HF45 5150	110 kΩ	HF45 8110	HF45 8110
160 Ω	HJ35 5160	❊	120 kΩ	HF45 8120	HF45 8120
180 Ω	HF45 5180	HF45 5180	150 kΩ	HF45 8150	HF45 8150
200 Ω	HF45 5200	HF45 5200	180 kΩ	HF45 8180	HF45 8180
220 Ω	HF45 5220	HF45 5220	220 kΩ	HJ35 8220	HF85 8220
270 Ω	HF45 5270	HF45 5270	270 kΩ	HF45 8270	HF45 8270
330 Ω	HF45 5330	HF45 5330	300 kΩ	HF45 8300	HF45 8300
390 Ω	HF45 5390	HF45 5390	330 kΩ	HF45 8330	HF45 8330
430 Ω	HF45 5430	HF45 5430	390 kΩ	HJ35 8390	HF85 8390
470 Ω	HF45 5470	HF45 5470	470 kΩ	HF45 8470	HF45 8470
510 Ω	HF45 5510	HF45 5510	560 kΩ	HJ35 8560	HF85 8560
560 Ω	HF45 5560	HF45 5560	680 kΩ	HJ35 8680	HF85 8680
680 Ω	HF45 5680	HF45 5680	820 kΩ	HJ35 8820	HF85 8820
820 Ω	HF45 5820	HF45 5820	1.0 MΩ	HF45 9100	HF45 9100
910 Ω	HF45 5910	HF45 5910	1.2 MΩ	HJ35 9120	❊
1.0 kΩ	HF45 6100	HF45 6100	1.5 MΩ	HJ35 9150	HF85 9150
1.2 kΩ	HF45 6120	HF45 6120	1.8 MΩ	HJ35 9180	HF85 9180
1.5 kΩ	HF45 6150	HF45 6150	2.2 MΩ	HJ35 9220	HF85 9220
1.8 kΩ	HF45 6180	HF45 6180	3.3 MΩ	HJ35 9330	HF85 9330
2.0 kΩ	HJ35 6200	HF85 6200	3.9 MΩ	HJ35 9390	❊
2.2 kΩ	HF45 6220	HF45 6220	4.7 MΩ	HJ35 9470	HF85 9470
2.4 kΩ	HJ35 6240	HF85 6240			
2.7 kΩ	HF45 6270	HF45 6270			
3.0 kΩ	HF45 6300	HF45 6300			
3.3 kΩ	HF45 6330	HF45 6330			
3.6 kΩ	HJ35 6360	HF85 6360			
3.9 kΩ	HF45 6390	HF45 6390			
4.7 kΩ	HF45 6470	HF45 6470			
5.1 kΩ	HF45 6510	HF45 6510			
5.6 kΩ	HF45 6560	HF45 6560			
6.8 kΩ	HF45 6680	HF45 6680			
8.2 kΩ	HF45 6820	HF45 6820			
9.1 kΩ	HF45 6910	HF45 6910			

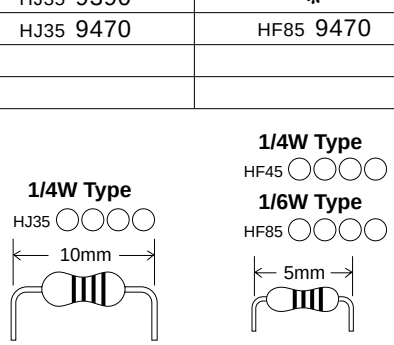

1992

RX-V620/HTR-5460/RX-V620RDS

YAMAHA